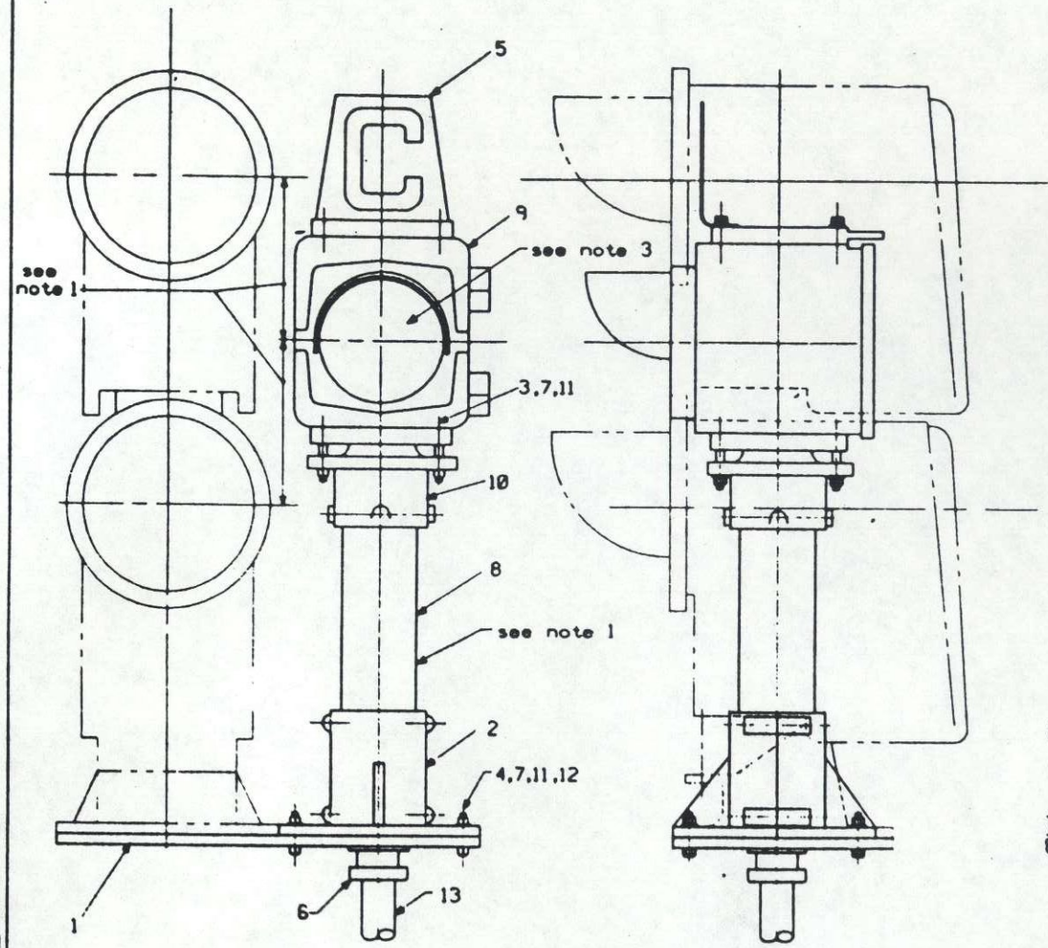

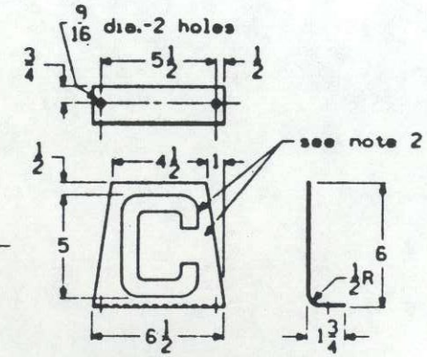

6000-1 LETTER C SIGN
Material- 0.081 thick 6061 T-6 Alum.

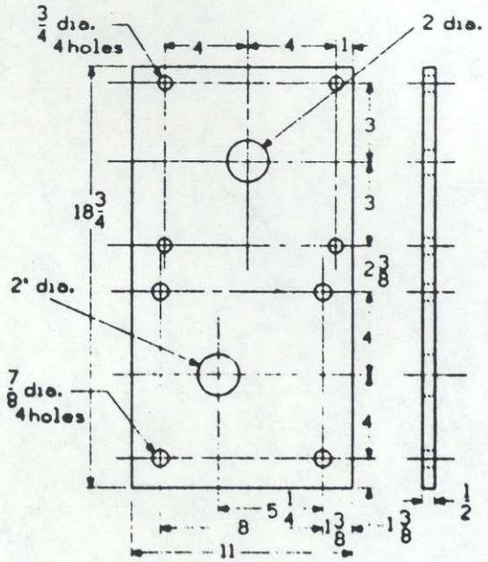

6000-10 BASE
Material - 1018 steel

ITEM	NAME	REQ	REF	ACCT NO
1	Base ,plate	1	6000-10	02-036091
2	Base ,split	1		02-038808
3	Bolt- 1/2-13x 3 ,sq. hd	4		19-303203
4	Bolt -1/2-13x2,hex.hd.	4		19-180403
5	C sign	1	6000-1	02-487286
6	Connector,1-1/2" liquid tight	1		49-250804
7	Nut ,1/2-13, hex. hd.	8		19-426004
8	Pipe ,3"dia.x17-1/2" lg.,stl.	1		42-622500
9	Signal,FA	1		02-498903
10	Socket	1		02-506325
11	Washer ,lock,med.	8		19-788007
12	Washer, flat	4		19-752300
13	conduit, liquid tight			49-224458

NOTES:

1. Item 8 is 17-1/2" long for old style SA dwarf signal. Item 8 to be shortened to 16-1/2" long for new type SA dwarf signal. Distance between centers of upper & lower lenses on old style is 18" and 16" on new style.
2. Letter proportions to be as shown on MOW st'd. plan 78010. Letter to be white non-reflective scotchcal, front and back to be black non-reflective scotchcal.
3. **Lunar white lens.**

SHEET 1

CONRAIL CS-6000

STANDARD

CLEAR TO NEXT INTERLOCKING SIGNAL
ADDITION TO SA DWARF SIGNAL

Approved
Chief Engineer C&S

ISSUE DATE: JUNE 27 1985

REV. | SHEET

60

REV	DATE	CHK BY

C&S CAD