TYPICAL DESIGNATION OF WIRES AND TAG INSCRIPTION

LOCAL CIRCUITS

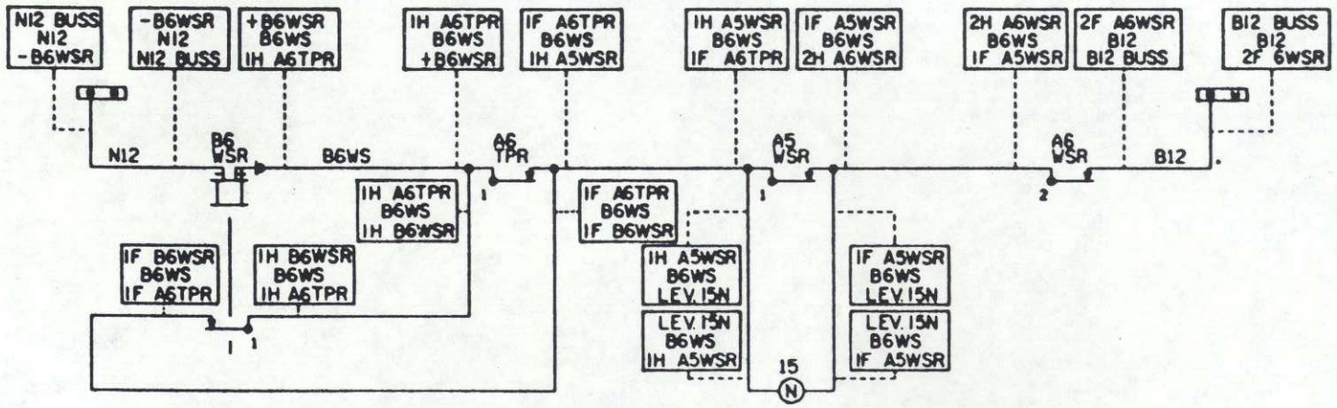

FIGURE 1

TYPICAL DESIGNATION OF WIRES AND TAG INSCRIPTION

LINE CIRCUITS

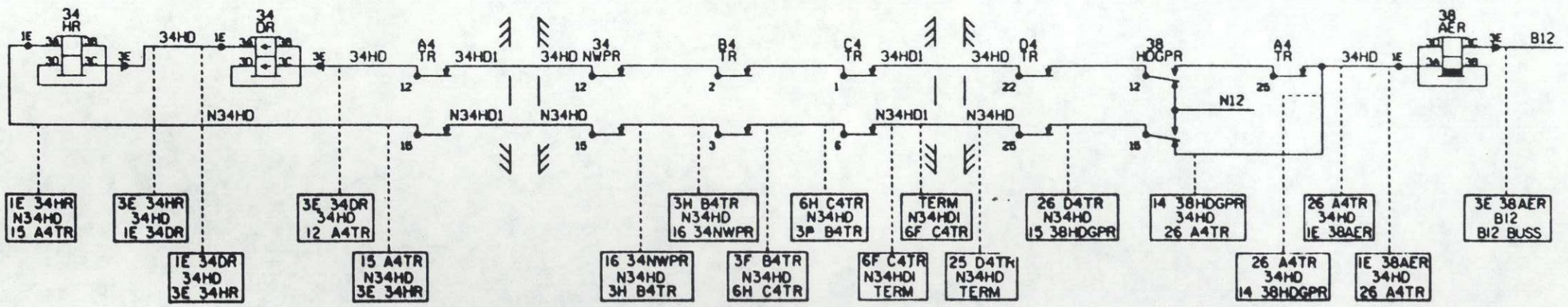

FIGURE 2

NOTES:

1. ALL WIRES CONNECTED TO RELAYS, AAR TERMINALS, TRANSFORMERS, RECTIFIERS, CAPACITORS, INDUCTORS, FUSES, RESISTORS, ETC., SHALL BE TAGGED AS SHOWN IN FIGURES 1 AND 2.
2. FIRST AND THIRD LINE OF TAG SHALL SHOW TERMINAL NOMENCLATURE AND DEVICE NOMENCLATURE. SECOND LINE OF TAG SHALL SHOW CIRCUIT NOMENCLATURE.

SHEET 1 CONT'D ON SH 2

CONRAIL CS-2700

STANDARD

STANDARD TAGGING IDENTIFICATION OF WIRES

NOV. 22, 1982

Approved: H. Abrahams

50

Printed in USA