GRS

SIGNAL EQUIPMENT

GENERAL RAILWAY SIGNAL COMPANY
ROCHESTER, NEW YORK, U.S.A.

Zachary Gillihan
Digitally signed by Zachary Gillihan
DN: cn=Zachary Gillihan, o=ZCG Utility Scrap, ou, email=zachary.gillihan@gmail.com, c=US
Date: 2017.06.14 16:05:26 -05'00'

4-29-69

CONTENTS FOR PARTS LIST CATALOG

	SECTION	PAGES	DATE
ACCESSORIES	3	See Assemblies Catalog	
CASES & HOUSINGS	5		
CABLE POSTS	10		
CODED TRACK & TRAKODE® EQUIPMENT	18		
DRAGGING EQUIPMENT DETECTOR	P26	1 to 6	6-62
HIGHWAY CROSSING PROTECTION	P30	1 to 34	4-63 & 5-66
LOCKS			
Model 9B	P50	1 to 18	6-62, 4-63 & 5-66
Model 10	P50	31 to 42	5-66
Spring Switch	P50	51 to 68	6-62
OVERLAY TRACK CIRCUITS	92	See Assemblies Catalog	
RECTIFIERS & POWER SUPPLIES	53	See Assemblies Catalog	
RELAYS			
Types B & VTB	P62	1 to 62	2-65, 5-66 & 10-67
Types K, KB & Thermal	P65	1 to 112	11-61, 8-62 2-65, 5-66 & 10-67
RETARDERS	P71	1 to 46	2-69
SIGNALS			
Color-Light, Type D	P73	1 to 18	12-62
Color-Light, Type G	P73	21 to 30	2-64
Color-Light, Dwarf, Types FA, MD, ME & MF	P73	31 to 42	12-62
Color-Light, Type W, Marker Lights	P73	51 to 56	12-62
Lenses, Roundels & Cover Glasses	P73	91 to 96	6-63 & 5-66
Highway Crossing	P30	1 to 34	4-63 & 5-66
Searchlight, Types SA & SA-1	P76	1 to 36	7-63 & 5-66
SWITCH CIRCUIT CONTROLLERS	P81	1 to 14	5-66
SWITCH MACHINES			
Electric	P85	1 to 112	4-62, 8-62 6-63, 4-64, 5-66 10-67 & 2-68
Model 9, Hand-Operated	P87	1 to 20	5-66
SWITCH & PIPELINE FITTINGS	P91	1 to 32	2-64
SYSTEMS			
Highway Crossing Protection with Wired Case	92	See Assemblies Catalog	
Overlay Track Circuits	92	See Assemblies Catalog	
TEST BOXES	P30	28 to 33	4-63

GENERAL RAILWAY SIGNAL COMPANY
A UNIT OF GENERAL SIGNAL CORPORATION
ROCHESTER NEW YORK 14602

WHAT THIS CATALOG CONTAINS

	SECTION	PAGES	DATE
ACCESSORIES	3	1 to 22	5-61 & 7-62
CASES and HOUSINGS			
Modular Instrument Cases	5	1 to 24	10-62, 6-63 & 3-64
Base-of-Mast Instrument Cases	5	29 to 40	7-62
Small Sizes - for Terminal Boards, etc	5	51 to 54	6-60
Modular Instrument Housings	5	101 to 122	3-60 & 6-63
CABLE POSTS	10	1 to 2	6-60
CODED TRACK and TRAKODE EQUIPMENT	18	1 to 12	3-60 & 7-62
DRAGGING EQUIPMENT DETECTOR	26	1 to 2	12-57
HIGHWAY CROSSING PROTECTION	30	1 to 26	6-60, 10-60, 11-63 & 12-65
INDICATORS, MOTOR CAR or SWITCH	38	1 to 4	7-62
LAMPS	46	1 to 10	6-63 & 12-65
LOCKS, ELECTRIC			
Model 9B	50	1 to 6	4-58
Model 10	50	21 to 28	12-65
Spring Switch	50	41 to 54	11-59 & 7-62
POWER SUPPLIES, for cTc	53	1 to 6	5-61
RECTIFIERS	53	21 to 36	12-65
RELAYS			
Types B & VTB	62	1 to 22	10-64
Types K & T	65	1 to 28	4-58, 10-60, 8-61, 11-63, & 6-64
SIGNALS			
Color-Light, Type D	73	1 to 14	8-60
Color-Light Dwarf, Types FA, MD, ME & MF	73	51 to 64	12-59
Color-Light, Type W, Marker Lights	73	71 to 76	3-63
Highway Crossing	30	1 to 26	10-59, 6-60 & 10-60
Searchlight, Type SA-1	76	1 to 22	1-63
SWITCH CIRCUIT CONTROLLERS	81	1 to 8	6-64
SWITCH MACHINES, ELECTRIC			
5A, E, F, G & H	85	1 to 24	11-59 & 2-61
Model 6	85	41 to 44	1-63
Electric Switchman	85	51 to 56	11-63
SWITCH MACHINES, HAND-OPERATED	87	1 to 10	12-65
SWITCH & PIPELINE FITTINGS	91	1 to 24	12-57, 10-59, 3-60, 7-62 & 3-63
SYSTEMS			
Highway Crossing Protection with Wired Case	92	1 to 4	10-60
Overlay Track Circuits	92	11 to 24	12-65
TEST BOXES	30	21 to 26	6-60
TRANSFORMERS			
Air-Cooled	95	1 to 20	12-57, 10-59, 3-60 & 3-63

GENERAL RAILWAY SIGNAL COMPANY
A UNIT OF GENERAL SIGNAL CORPORATION
ROCHESTER, N.Y. 14602

CATALOG SECTION 3

Accessories

CONTENTS

	Page
Anchor Bolts, etc.	20
Balancing Impedance	18
Fuse Blocks and Fuses	2
Lightning Arresters	6
Resistors	6 & 18
Switches	2
Tags, Connectors, etc.	12
Terminal Blocks	2
Wire Eyelets, Terminals and Pliers	16

TOOLS FOR TRANSPORTATION

GENERAL RAILWAY SIGNAL COMPANY

ROCHESTER, NEW YORK

Printed in U. S. A.

A-1804

May 1961

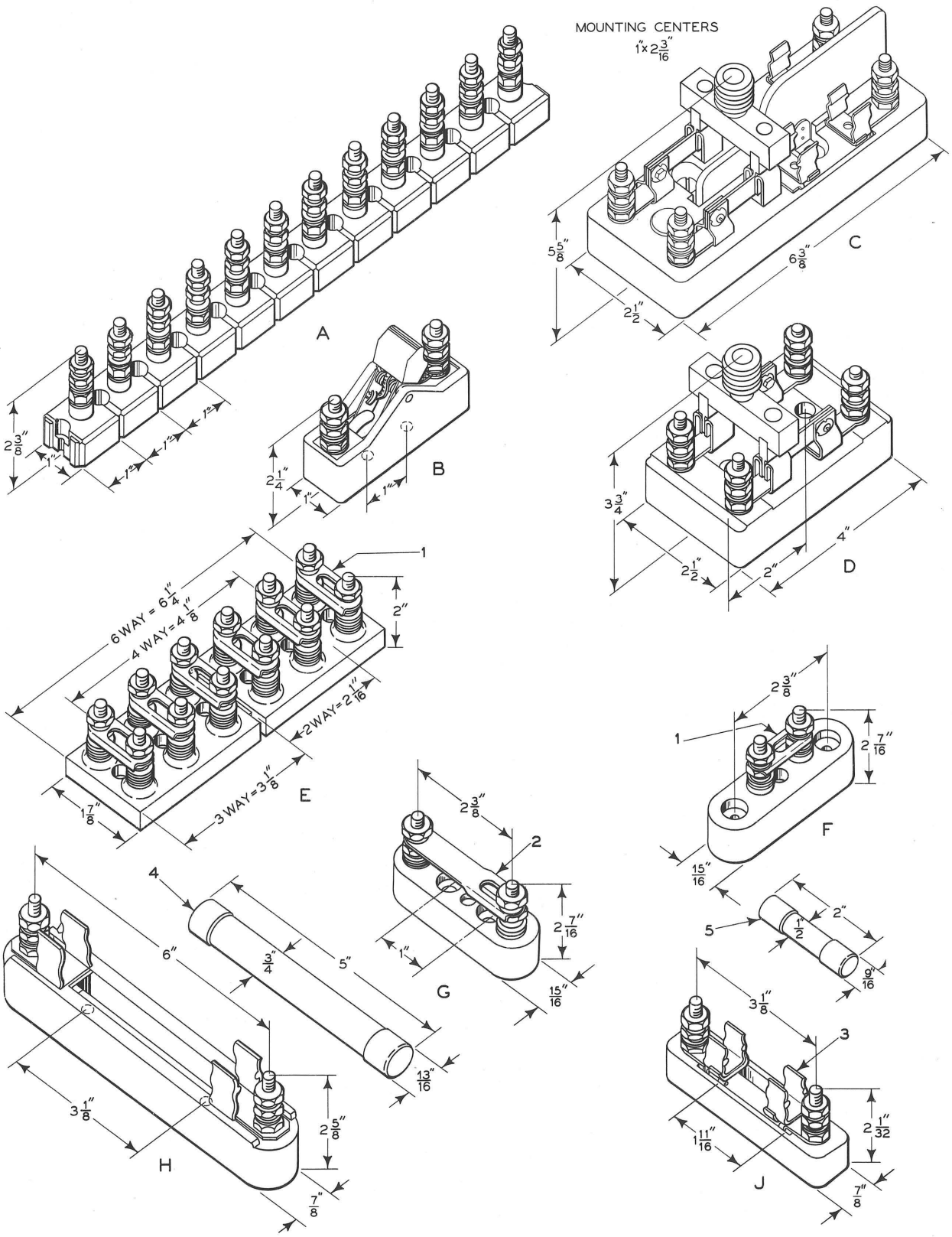

Terminal blocks, fuse blocks, fuses, and switches.

TERMINAL BLOCKS, FUSE BLOCKS, FUSES and SWITCHES

All have No. 14–24 terminal posts

Order by catalog number and name shown in bold type

REF.	NAME	CATALOG NUMBER
A	TERMINAL BLOCK, 12-way, may be separated into groups as required.	A3-129
B	SWITCH, single pole, with spring return, used as test switch	A3-250
B1	As above, except without return spring	A3-251
C	SWITCH, fused, with barrier, double pole, single throw, 30 ampere, 125 volt. Does not include fuses	A3-203
D	SWITCH, double pole, single throw, 30 ampere, 125 volt	A3-202
E	TERMINAL BLOCK, 6-way, with connectors, may be separated into 3-way blocks	A3-127
E1	TERMINAL BLOCK, 4-way, with connectors, may be separated into 2-way blocks	A3-130
F	TERMINAL BLOCK, with connector	A3-123
G	TERMINAL BLOCK, with connector	A3-125
H	FUSE BLOCK, for 0-30 ampere, 600 volt cartridge fuse	A3-295
J	FUSE BLOCK, for 0-30 ampere, 250 volt cartridge fuse	A3-185
1	CONNECTOR, 1" centers	P3-147
2	CONNECTOR, 2 3/8" centers	P3-148
3	FUSE CLIP, for Ref. J.	P3-106
4	CARTRIDGE FUSE, N.E.C. Std. ferrule contact type, non-indicating, non-renewable, 600 volts A.C. or D.C.	

	CATALOG NUMBER		
1 ampere	P3-171	15 ampere	P3-175
3 "	P3-172	20 "	P3-176
6 "	P3-173	25 "	P3-177
10 "	P3-174	30 "	P3-178

TERMINAL BLOCKS, FUSE BLOCKS, FUSES and SWITCHES

Order by catalog number and name shown in bold type

REF.	NAME	CATALOG NUMBER
4A	As above, except fusetron	
	1 ampere P3-211	6.25 ampere P3-219
	1.25 " P3-212	8 " P3-220
	1.6 " P3-213	10 " P3-221
	2 " P3-214	12 " P3-222
	2.5 " P3-215	15 " P3-223
	3.2 " P3-216	20 " P3-224
	4 " P3-217	25 " P3-225
	5 " P3-218	30 " P3-226
5	CARTRIDGE FUSE, N.E.C. Std. ferrule contact type, non-indicating, non-renewable, 250 volts A.C. or D.C.	
	1 ampere P3-179	15 ampere P3-183
	3 " P3-180	20 " P3-184
	6 " P3-181	25 " P3-185
	10 " P3-182	30 " P3-186
5A	As above, except fusetron	
	1 ampere P3-236	6.25 ampere P3-244
	1.25 " P3-237	8 " P3-245
	1.6 " P3-238	10 " P3-246
	2 " P3-239	12 " P3-247
	2.5 " P3-240	15 " P3-248
	3.2 " P3-241	20 " P3-249
	4 " P3-242	25 " P3-250
	5 " P3-243	30 " P3-251

Memoranda

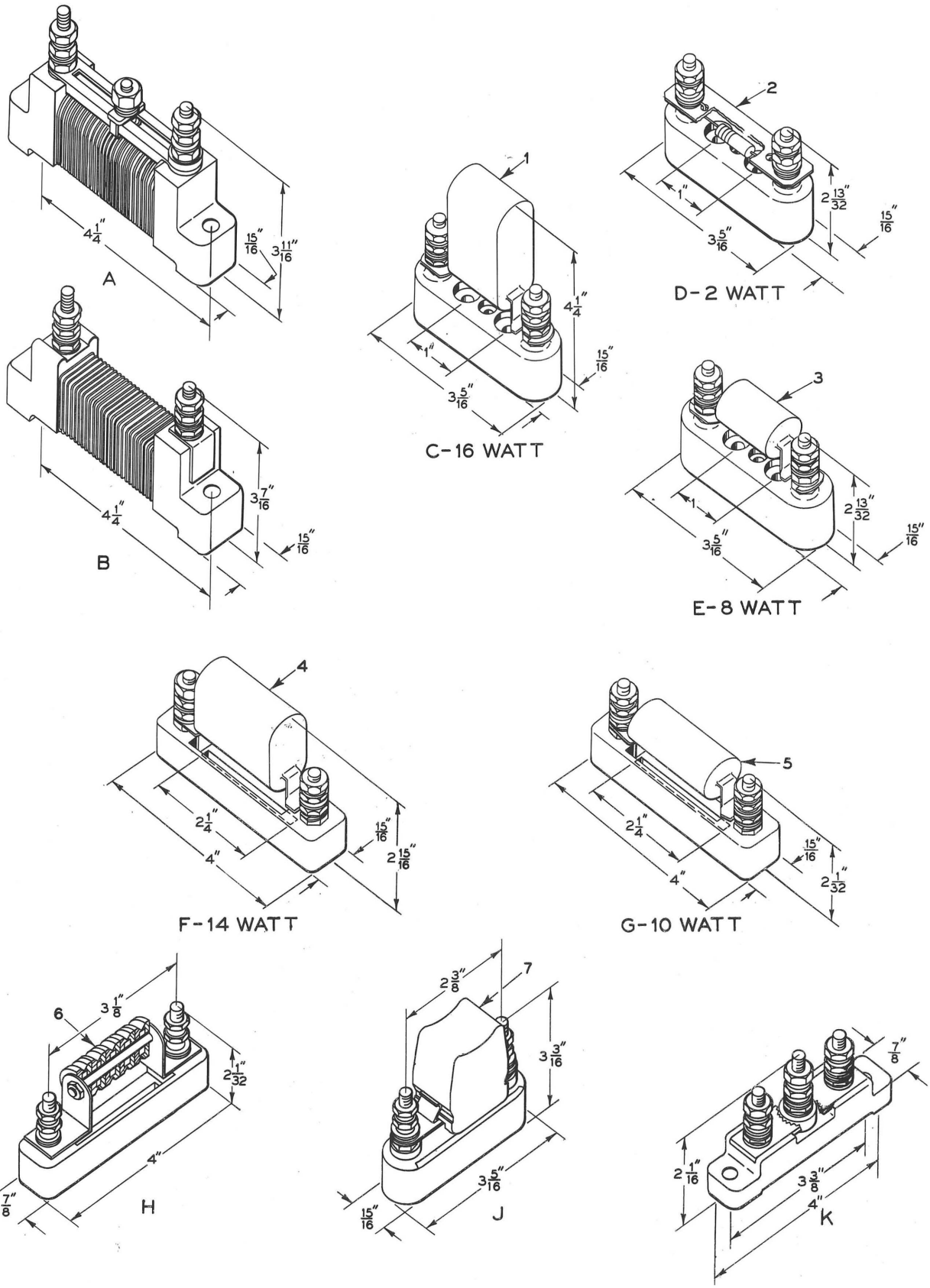

Resistors and lightning arrestors.

RESISTORS and LIGHTNING ARRESTERS

All have No. 14-24 terminal posts

To order specify "Resistor" and give catalog number

TYPE T ADJUSTABLE RESISTOR
15 WATTS CONTINUOUS CAPACITY FOR 75° CENTIGRADE RISE

REF.	MAXIMUM RESISTANCE OHMS	CATALOG NUMBER	REF.	MAXIMUM RESISTANCE OHMS	CATALOG NUMBER
A	0.70	A3-178	A11	10.0	A3-159
A1	0.80	A3-145	A12	12.5	A3-160
A2	1.00	A3-146	A13	16.0	A3-161
A3	1.5	A3-177	A14	17.0	A3-165
A4	1.6	A3-147	A15	22.0	A3-166
A5	2.0	A3-148	A16	28.0	A3-167
A6	4.0	A3-155	A17	35.0	A3-168
A7	5.0	A3-156	A18	44.0	A3-169
A8	6.3	A3-157	A19	56.0	A3-170
A9	7.0	A3-179	A20	70.0	A3-171
A10	8.0	A3-158	A21	87.0	A3-172
			A22	111.0	A3-173

TYPE T FIXED RESISTOR
15 WATTS CONTINUOUS CAPACITY FOR 75° CENTIGRADE RISE

REF.	MAXIMUM RESISTANCE OHMS	CATALOG NUMBER
B	1.0	A3-136
B1	2.0	A3-141
B2	3.0	A3-140
B3	5.9	A3-135

16 WATT RESISTOR COMPLETE			RESISTOR ONLY	
REF.	MAXIMUM RESISTANCE OHMS	CATALOG NUMBER	REF.	CATALOG NUMBER
C	500	A3-297	1	P3-285
C1	1000	A3-298	1A	P3-286

RESISTORS and LIGHTNING ARRESTERS

All have No.14-24 terminal posts

To order specify "Resistor" and give catalog number

2 WATT RESISTOR COMPLETE				RESISTOR ONLY	
REF.	MAXIMUM RESISTANCE OHMS	TOLERANCE + or -	CATALOG NUMBER	REF.	CATALOG NUMBER
D	18	10%	A3-272	2	P3-264
D1	47	"	A3-268	2A	P3-260
D2	56	"	A3-287	2B	P3-279
D3	100	"	A3-289	2C	P3-281
D4	120	"	A3-283	2D	P3-275
D5	150	10%	A3-279	2E	P3-271
D6	180	"	A3-288	2F	P3-280
D7	220	"	A3-286	2G	P3-278
D8	270	"	A3-266	2H	P3-258
D9	330	"	A3-273	2J	P3-265
D10	390	10%	A3-292	2K	P3-284
D11	470	"	A3-291	2M	P3-283
D12	510	5%	A3-267	2N	P3-259
D13	560	10%	A3-284	2P	P3-276
D14	680	"	A3-285	2Q	P3-277
D15	820	10%	A3-280	2R	P3-272
D16	1,000	"	A3-269	2S	P3-261
D17	1,200	"	A3-290	2T	P3-282
D18	1,500	5%	A3-282	2U	P3-274
D19	1,500	10%	A3-271	2V	P3-263
D20	2,000	5%	A3-265	2W	P3-257
D21	4,700	10%	A3-278	2X	P3-270
D22	5,100	5%	A3-281	2Y	P3-273
D23	6,800	10%	A3-275	2Z	P3-267
D24	10,000	"	A3-270	2AA	P3-262
D25	15,000	10%	A3-274	2AB	P3-266
D26	22,000	"	A3-277	2AC	P3-269
D27	33,000	"	A3-276	2AD	P3-268

RESISTORS and LIGHTNING ARRESTERS

All have No. 14-24 terminal posts

To order specify "Resistor" and give catalog number

8 WATT RESISTOR COMPLETE			RESISTOR ONLY	
REF.	MAXIMUM RESISTANCE OHMS	CATALOG NUMBER	REF.	CATALOG NUMBER
E	1	A3-220	3	P3-200
E1	2	A3-224	3A	P3-204
E2	3	A3-214	3B	P3-194
E3	5	A3-221	3C	P3-201
E4	5.9	A3-227	3D	P3-207
E5	7.5	A3-226	3E	P3-206
E6	10	A3-217	3F	P3-197
E7	15	A3-218	3G	P3-198
E8	20	A3-229	3H	P3-209
E9	25	A3-211	3J	P3-191
E10	35	A3-230	3K	P3-210
E11	50	A3-215	3M	P3-195
E12	75	A3-219	3N	P3-199
E13	100	A3-216	3P	P3-196
E14	125	A3-228	3Q	P3-208
E15	150	A3-213	3R	P3-193
E16	175	A3-222	3S	P3-202
E17	200	A3-225	3T	P3-205
E18	250	A3-212	3U	P3-192
E19	300	A3-223	3V	P3-203

14 WATT RESISTOR COMPLETE			RESISTOR ONLY	
REF.	MAXIMUM RESISTANCE OHMS	CATALOG NUMBER	REF.	CATALOG NUMBER
F	50	A3-236	4	P3-229
F1	100	A3-237	4A	P3-230
F2	200	A3-238	4B	P3-231
F3	300	A3-240	4C	P3-233
F4	500	A3-239	4D	P3-232
F5	600	A3-241	4E	P3-234
F6	800	A3-242	4F	P3-235
F7	1000	A3-235	4G	P3-228

RESISTORS and LIGHTNING ARRESTERS

All have No. 14-24 terminal posts

To order specify "Resistor" and give catalog number

10 WATT RESISTOR COMPLETE			RESISTOR ONLY	
REF.	MAXIMUM RESISTANCE OHMS	CATALOG NUMBER	REF.	CATALOG NUMBER
G	1	A3-190	5	P3-159
G1	5	A3-191	5A	P3-160
G2	10	A3-192	5B	P3-161
G3	15	A3-198	5C	P3-167
G4	25	A3-193	5D	P3-162
G5	45	A3-201	5E	P3-170
~~G6~~	~~62~~	~~A3-200~~	~~5F~~	~~P3-169~~
G7	50	A3-195	5G	P3-164
G8	100	A3-196	5H	P3-165
G9	150	A3-194	5J	P3-163
G10	200	A3-199	5K	P3-168
G11	500	A3-197	5M	P3-166

Order by catalog number and name shown in bold type

REF.	NAME	CATALOG NUMBER
H	LIGHTNING ARRESTER, 110-volts a-c, "Power Line Protector" . . .	A3-259
J	LIGHTNING ARRESTER, "Clearview", low voltage for vital signal circuits	A3-256
J1	LIGHTNING ARRESTER, heavy-duty, for use on track circuit leads .	A3-258
J2	LIGHTNING ARRESTER, "Clearcom" for communication circuits . .	A3-257
J3	LIGHTNING ARRESTER, "Equalizer"	A3-255
K	LIGHTNING ARRESTER, 30-150 volts d-c. or 30-220 volts a-c, has carborundum ground plate	A3-107
K1	As above, except 0-30 volts d-c. or a-c., has carbon ground plate. .	A3-109
6	ARRESTER, only, for Ref. H.	P3-256
7	ARRESTER, only, for Ref. J	P3-253
7A	Same as above, except for Ref. J1	P3-255
7B	Same as above, except for Ref. J2	P3-254
7C	Same as above, except for Ref. J3	P3-252

Memoranda

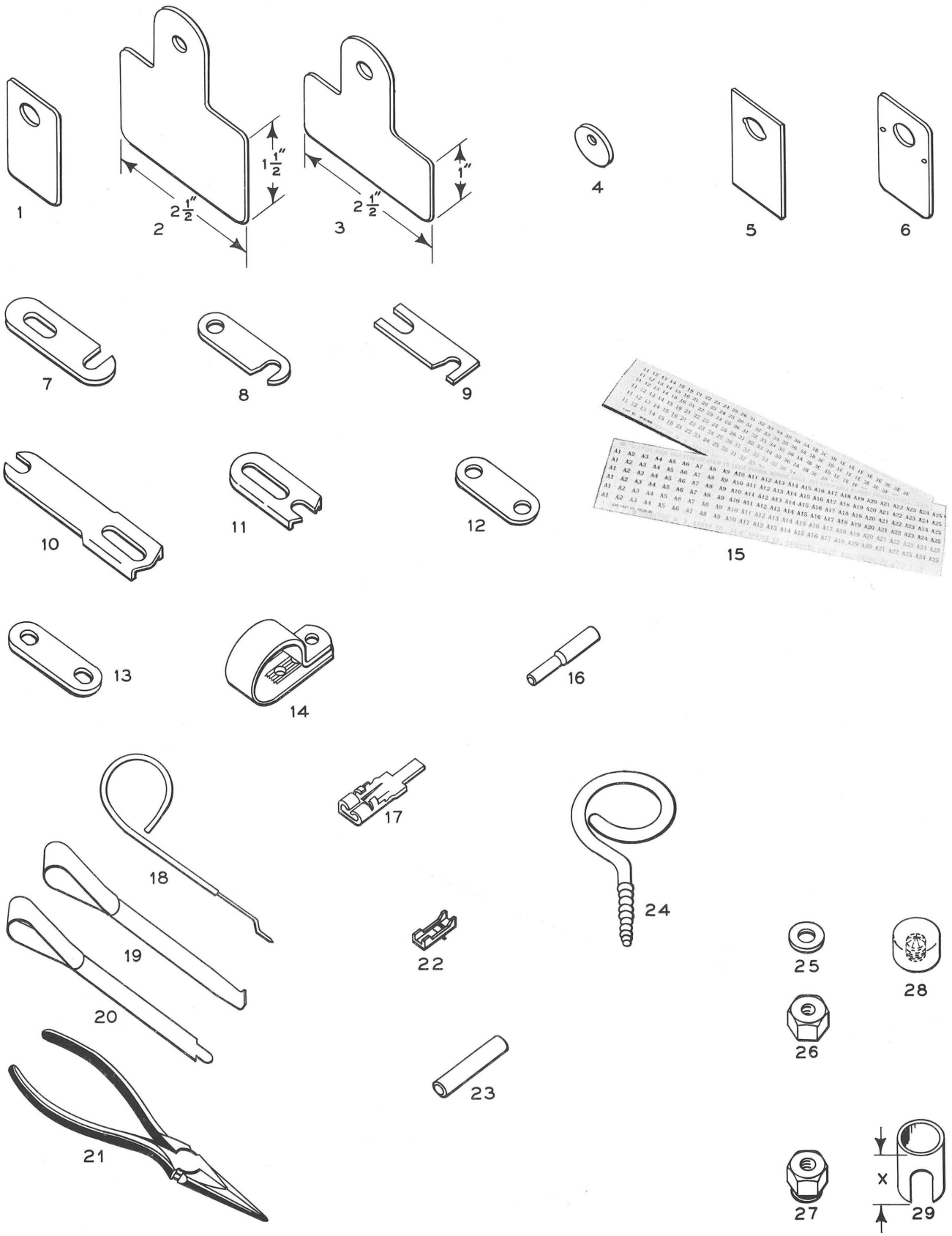

Tags, connectors, etc.

TAGS, CONNECTORS, ETC.

Order by catalog number and name shown in bold type

REF.	NAME	CATALOG NUMBER
1	TAG, 1" x 1 1/2" with 3/8" dia. hole, black fibre	P3-117
2	TAG, with 17/64" dia. hole, black fibre	P3-118
3	TAG, with 17/64" dia. hole, black fibre	P3-119
4	TAG, with 1/4" dia. hole, 25/32" dia. celluloid	P3-135
5	TAG, 1" x 1 1/2", with 3/8" dia. slotted hole to pass over eyelet, black fibre	P3-150
6	TAG, 1" x 1 1/2" with 1/2" dia. hole, black fibre	P3-136
7	CONNECTOR, 1 1/4" centers, for No. 14 or 1/4" screw	P3-139
8	CONNECTOR, 1 1/8" centers, for No. 14 or 1/4" screw	P3-109
9	CONNECTOR, 15/16" centers, for No. 14 or 1/4" screw	P3-126
10	CONNECTOR, 2 3/8" centers, for No. 14 or 1/4" screw	P3-148
11	CONNECTOR, 1" centers, for No. 14 or 1/4" screw	P3-147
12	CONNECTOR, 1 1/8" centers, for No. 14 or 1/4" screw	P3-108
13	CONNECTOR, 1 1/4" centers, for No. 14 or 1/4" screw	P3-107
14	CABLE HANGER, inside dia. 7/16"	P3-129
14A	As above, except inside dia. 19/32"	P3-130
14B	Same as Ref. 14, except inside dia. 27/32"	P3-131
14C	Same as Ref. 14, except inside dia. 1 3/32"	P3-132
14D	Same as Ref. 14, except inside dia. 1 15/32"	P3-133
14E	Same as Ref. 14, except inside dia. 1 31/32"	P3-134
	WRAP-AROUND TAGS, in pairs, has markings with single letter and number in groups of 25, see tabulation below:	
15	A 1 through A 25	P3-287
15A	A 26 " A 50	P3-288
15B	B 1 " B 25	P3-289
15C	B 26 " B 50	P3-290
15D	C 1 " C 25	P3-291
15E	C 26 " C 50	P3-292
15F	D 1 " D 25	P3-293
15G	D 26 " D 50	P3-294
15H	E 1 " E 25	P3-295
15K	E 26 " E 50	P3-296
15M	F 1 " F 25	P3-297
15N	F 26 " F 50	P3-298
15P	G 1 " G 25	P3-299

TAGS, CONNECTORS, ETC.

Order by catalog number and name shown in bold type

REF.	NAME	CATALOG NUMBER
15Q	G 26 through G 50	P3-300
15R	H 1 " H 25	P3-301
15S	H 26 " H 50	P3-302
15T	J 1 " J 25	P3-303
15U	J 26 " J 50	P3-304
15V	For Type B1 relay coil and contact designations	P3-305
15W	For Type B2 relay coil and contact designations	P3-306
15X	For Type VTB relay coil and contact designations	P3-307
16	SLEEVE, moulded rubber, used with No. 10 wire on Type B relay plugboard	P62-298
17	TERMINAL, for Type B relays	P62-466
18	EXTRACTOR, steel wire, covered with insulating tubing, for removing terminal and clips from Type B relay plugboards	P3-308
19	TOOL, assembling, for holding insulator in plugboards while inserting clip	P3-121
20	TOOL, assembling, for inserting clips into engagement with insulators	P3-120
21	PLIERS, long nose, 7", with side cutters	P3-188
22	TERMINAL, wire, for fingers and terminal coils on Type A1 relays	P3-187
23	SLEEVE, insulating, approx. 13/64" I.D., for terminals in Type A1 relays	P62-450
23A	As above, except approx. 5/64" I.D.	P3-190
24	BRIDLE RING, 5/8" dia. eye	P3-157
24A	As above, except 1 1/4" dia. eye	P3-156
24B	Same as Ref. 24, except 1 5/8" dia. eye	P3-155
24C	Same as Ref. 24, except 3" dia. eye	P3-158
25	WASHER, for No. 14 terminal posts. Per hundred	P76-108
26	NUT, No. 14-24 x 3/16" tk. hex. Per hundred	P62-333
27	NUT, No. 14-24 x 5/16" tk. hex. Per hundred	P76-131
28	BUTTON, black, insulation for No. 14 terminal post	P3-127
28A	As above, except red	P3-128
29	SHIELD, 1 1/16" long, insulation for No. 14 terminal post	P3-152
29A	As above, except 1 3/16" long.	P3-154
29B	Same as Ref. 29, except 1 7/16" long	P3-153

Memoranda

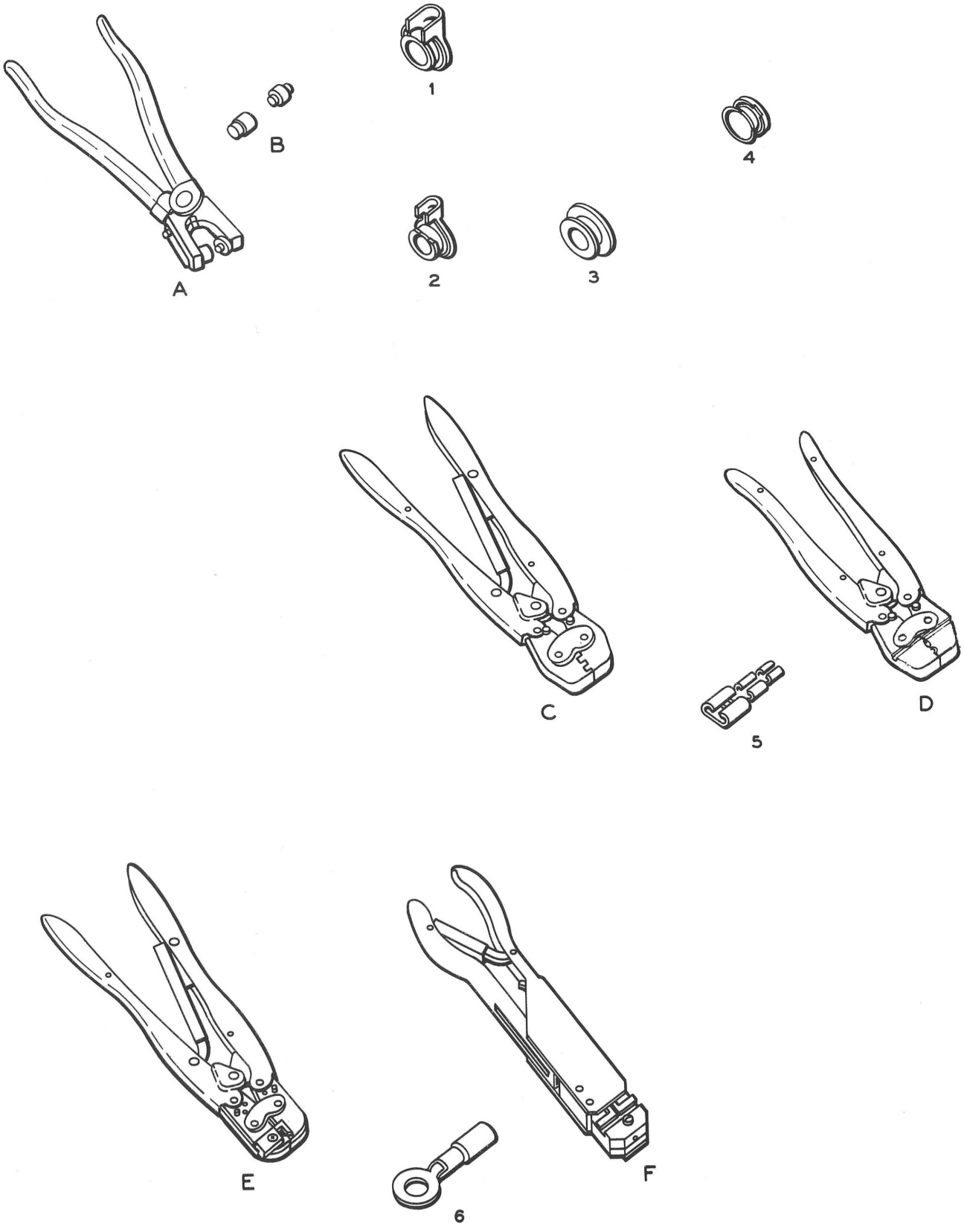

Wire eyelets, terminals, and pliers.

WIRE EYELETS, TERMINALS and PLIERS

Order by catalog number and name shown in bold type

REF.	NAME	CATALOG NUMBER
A	PLIERS, with dies for eyelets for 1/4" posts, for use with eyelets Refs. 1 through 4	A3-119
A1	Same as Ref. A, except without dies	A3-120
B	DIES COMPLETE, for eyelets for 1/4" posts	A3-121
C	TOOL, crimping, ratchet type, for "Faston" terminals Refs. 5 and 5A	A3-100
D	TOOL, crimping, non-ratchet type, for "Faston" terminals Refs. 5 and 5A	A3-105
E	TOOL, crimping, ratchet type, for "Amp" terminals Refs. 6 and 6A. .	A3-183
F	TOOL, crimping, ratchet type, for "Amp" terminals Ref. 6B	A3-103
1	WIRE EYELET, "Bee", for 1/4" post, takes No. 14, 16 or 18 wire with 3/16" to 7/32" diameter insulation, per hundred	P3-122
1A	As above, except takes wire No. 14, 16 or 18 with 1/4" to 5/16" diameter insulation. Per hundred	P3-123
2	WIRE EYELET, "Bee", for 1/4" and 5/16" posts, takes up to No. 12 wire with 1/4" or 5/16" diameter insulation. Per hundred	P3-124
2A	As above, except for No. 14 post takes No. 14, 16 or 18 wire with 5/32" diameter or smaller insulation. Per hundred	P3-125
3	WIRE EYELET, rolled, for 1/4" and No. 14 posts, takes No. 10 wire. Per hundred	P3-137
4	WIRE EYELET, slotted, for 1/4" and No. 14 posts, takes No. 14, 16 or 18 wire. Per hundred	P3-138
5	TERMINAL, "Faston", for No. 18 to 22 wire. Per hundred	P3-312
5A	As above, except for No. 14 to 18 wire. Per hundred	P3-313
6	TERMINAL,"Amp", for 1/4" post, takes No. 10 or 12 wire, color coded black. Per hundred	P3-310
6A	As above, except for No. 14 or 16 wire, color coded yellow. Per hundred	P3-309
6B	Same as Ref. 6, except for No. 16 to 20 wire, color coded green Per hundred	P3-311

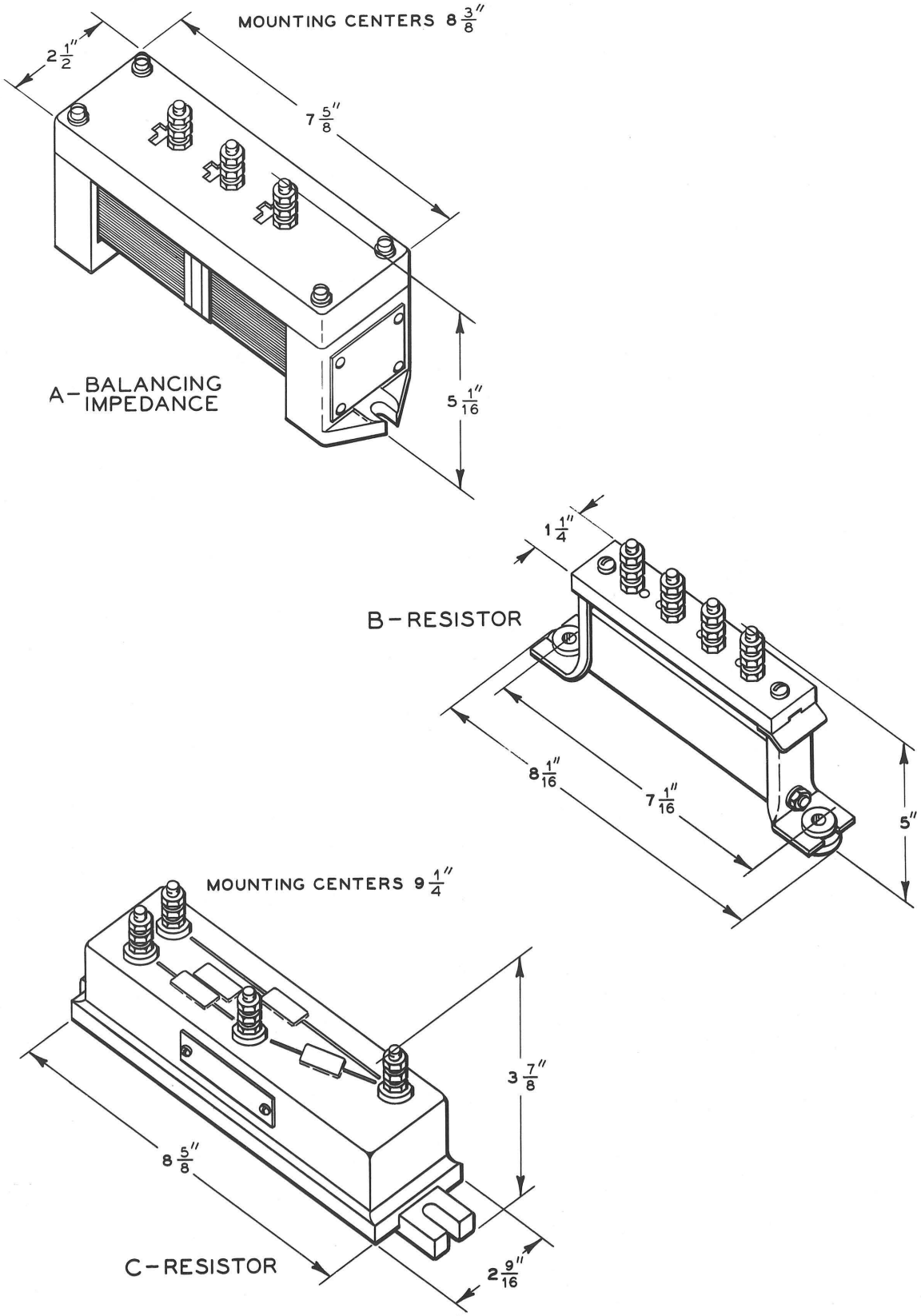

Balancing impedance and heavy-duty resistors.

BALANCING IMPEDANCE and HEAVY-DUTY RESISTORS

The balancing impedance, Ref. A, is for use with a-c track relays on single-rail track circuits on electric traction lines employing direct-current for propulsion. The combination of this balancing impedance and the two track windings on the relay neutralizes the magnetic effect due to the direct current flowing through these track windings.

The heavy-duty resistor Ref. B is for use with single-rail track circuits using impedance bonds. Capacity is 28 watts for 75° centigrade temperature rise.

Ref. C is for use with two-rail track circuits using impedance bonds. Capacity is 50 watts for 75° centigrade temperature rise.

REF.	NAME	CATALOG NUMBER
A	BALANCING IMPEDANCE, for 25 or 60 cycle	A3-117
B	RESISTOR, 2.5 ohms, with taps at 1.5; 0.5, and 0.5	A3-207
C	RESISTOR, 0.4 ohms, with taps at 0.1, 0.1 and 0.2	A3-113
C1	As above, except 0.8 ohms, with taps at 0.2, 0.2, and 0.4	A3-114
C2	Same as Ref. C, except 0.3 ohms, with taps at 0.1, and 0.2 (center tap omitted)	A3-115

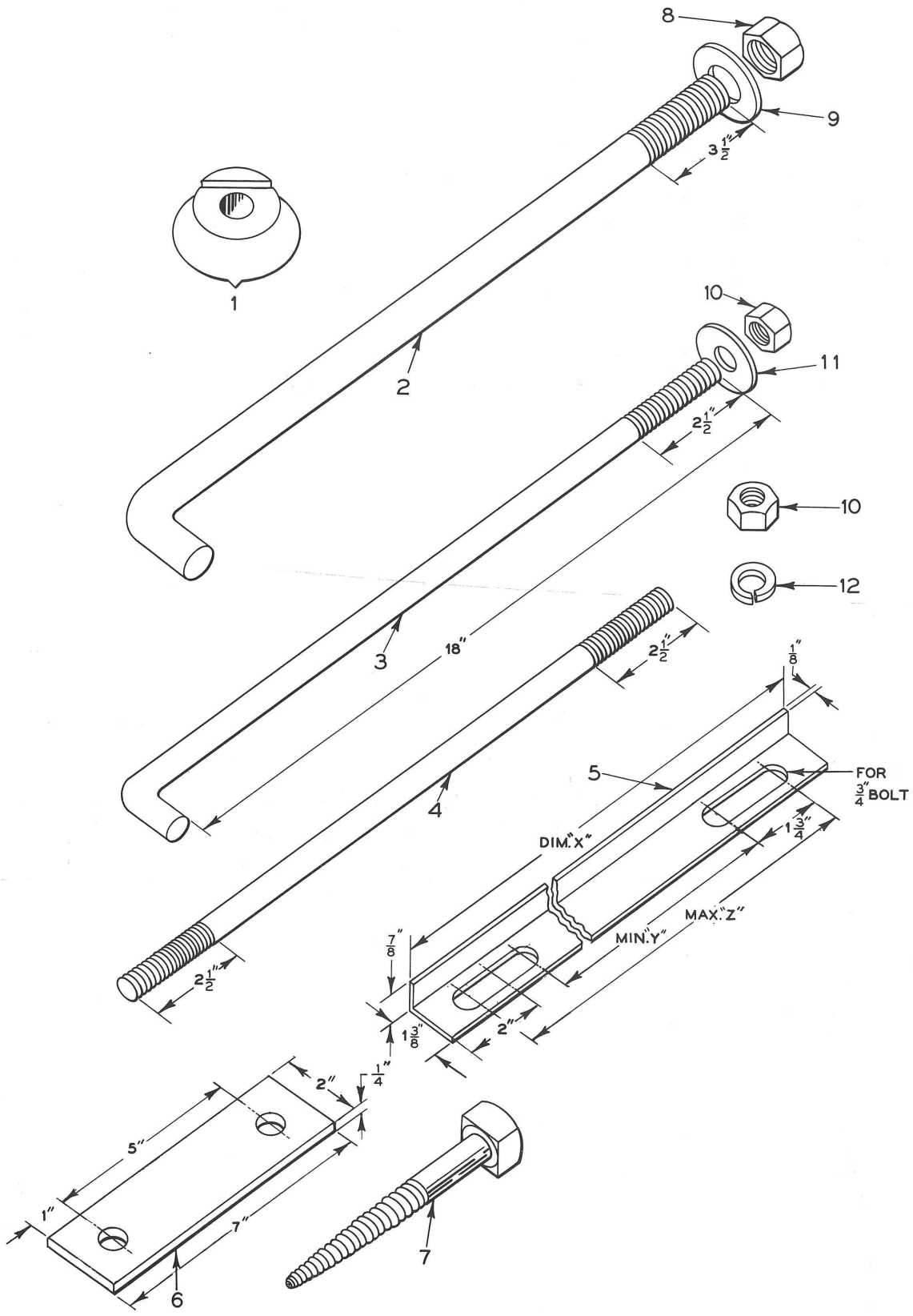

Anchor bolts, etc.

ANCHOR BOLTS, ETC.

REF.	NAME	CATALOG NUMBER
1	WASHER, OG, for 3/4" bolt	P3-151
2	HOOK BOLT, 1" -8 x 18" long, 3-1/2" threads	P3-115
2A	As above, except 24" long, 2-1/2" threads	P3-116
3	HOOK BOLT, 3/4" -10 x 18".	P3-149
4	ROD, 3/4" -10, threaded both ends, 11" long	P3-140
4A	As above, except 12" long	P3-144
4B	Same as Ref. 4, except 13" long	P3-141
4C	Same as Ref. 4, except 14" long	P3-142
4D	Same as Ref. 4, except 15" long	P3-143
4E	Same as Ref. 4, except 17" long 3", thread on each end	P3-145
	WASHER, angle, see tabulation	
	Dim. X. / Dim. Y. / Dim. Z.	
5	8 3/4" / 3" / 6 1/2"	P3-112
5A	13 1/4" / 7 1/2" / 11"	P3-114
5B	18" / 12 1/4" / 15 3/4"	P3-110
5C	22" / 16 1/4" / 19 3/4"	P3-113
6	WASHER, plate, A. A. R. dwg. 125511, 5" spacing for 1" bolts	P91-145
6A	WASHER, plate, A. A. R. dwg. 125512, 5" spacing for 3/4" bolts	P91-146
*7	SCREW, lag, 3/4" -6	P3-103
8	NUT, hex., 1" -8	P3-105
9	WASHER, for 1" bolts	P3-102
*10	NUT, hex., 3/4" -10	P91-220
11	WASHER, for 3/4" bolts	P3-101
*12	WASHER, lock, for 3/4" bolts.	P91-223

* Commercial items.

Memoranda

CATALOG SECTION 5

Modular Steel and Aluminum Instrument Cases with Adjustable Fixtures

CONTENTS

	Page
Low-Single Case, Steel	4
Low-Single Case, Aluminum	6
High-Single Case, Steel	4
High-Single Case, Aluminum	6
Low-Double Case, Steel	5
Low-Double Case, Aluminum	7
High-Double Case, Steel	5
High-Double Case, Aluminum	7
Half Case, Steel only	8
Low Case, one-door, Steel only	8
High Case, one-door, Steel only	8
Shelving and Battery Trays	10-14
Backboard and Terminal Board Sets	15
Typical Arrangement for Type B Relays	16-17
Adjustable Fixtures	18-22
Replacement Parts	23-24

TOOLS FOR TRANSPORTATION

GENERAL RAILWAY SIGNAL COMPANY

ROCHESTER, NEW YORK

Printed in U. S. A.

A-1394

March 1964

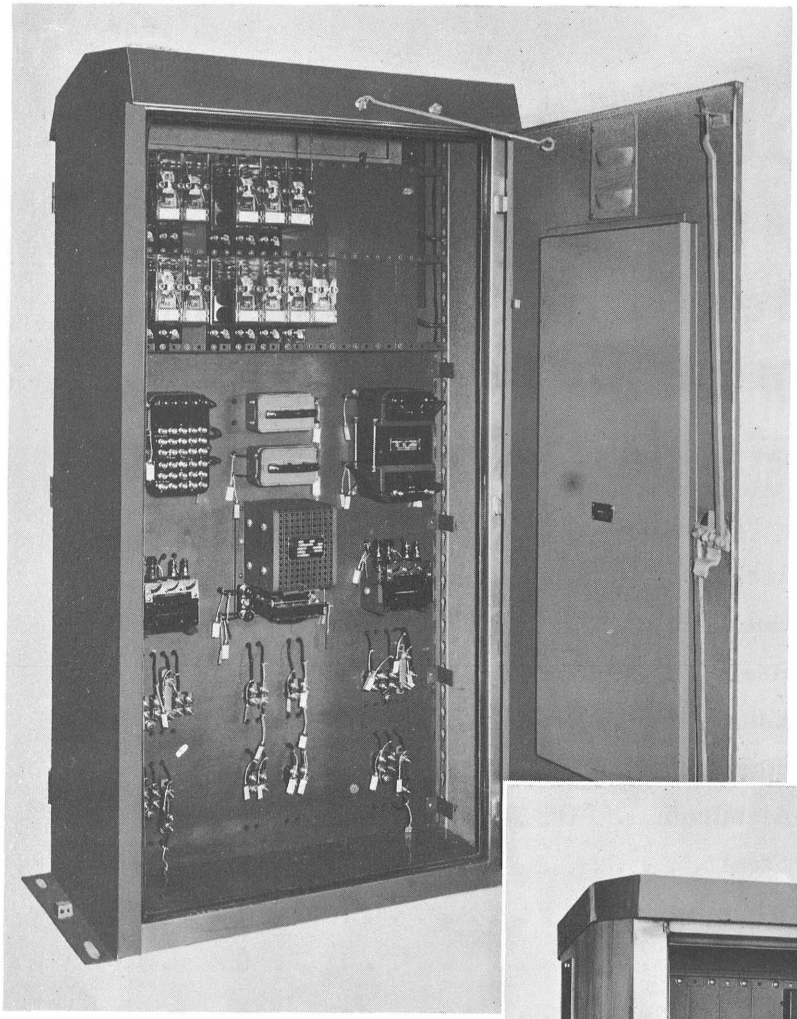

High-single modular steel case.

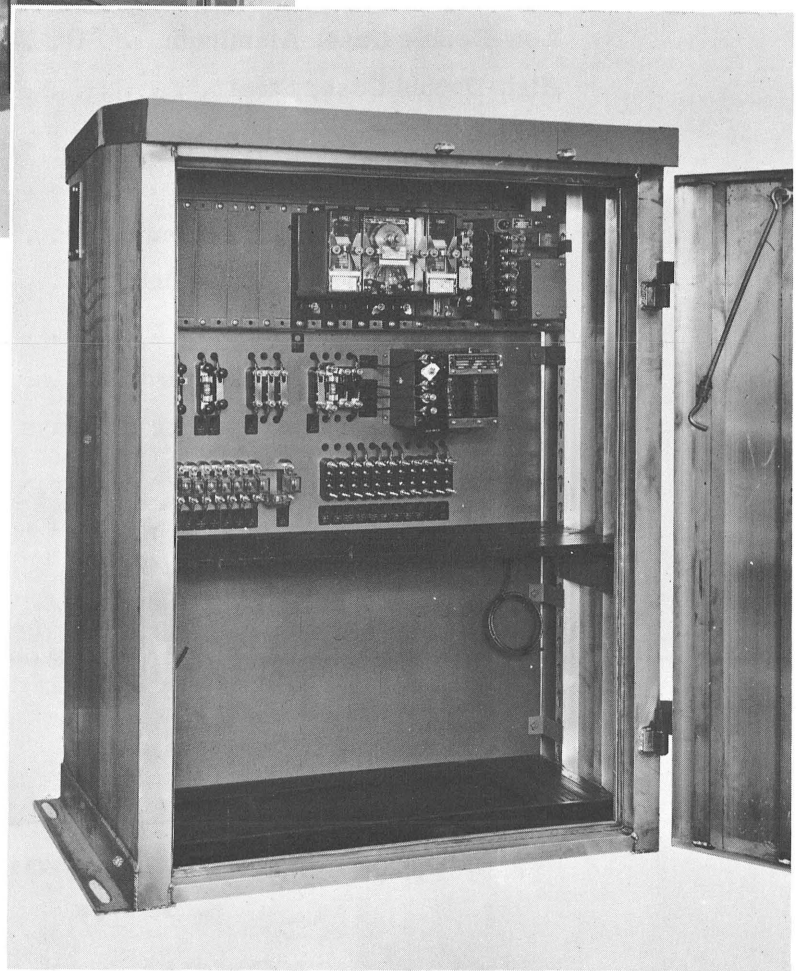

Low-single modular aluminum case.

Modular Steel and Aluminum Instrument Cases with Adjustable Fixtures

GENERAL INFORMATION

These instrument cases have permanently installed keyhole channels to provide for flexibility in arranging fixtures, relay shelves, backboards, etc. (See pages 10-22 for ordering fixtures.)

Cases can be furnished either lined or unlined. The lining consists of 1/2" thick insulating board.

Front and rear doors are equipped with handles for padlocking. Doors are replaceable, and are gasketed to ensure a tight seal between door and case. Door hooks are provided to hold the doors open at 90 and 160 degrees.

A mounting bracket for pull-chain light socket is provided in all cases, except in one-door steel cases.

All cases, except one-door steel cases, are available with hardware for mounting Type B relays. (See illustrations for case capacities.) The one-door cases may be used for any type of shelf- or wall-mounted apparatus.

STEEL INSTRUMENT CASES

Constructed of heavy-gauge steel, cases are strong, durable, and corrosion resistant.

Low- and high-single and low- and high-double cases are furnished with eight knockouts, four on each side, to which aerial couplings or maintainer-call lamp can be attached in the field. One-door cases have two knockouts, one on each side.

Reversible, louver-type ventilators are provided in each door. Ventilators can be opened or closed by inverting the louver on the inside of the door. Doors are furnished with latch rods.

Two ground blocks are provided on all cases (except half- and one-door cases) one on each side. Each block has a 3/8" and a 9/32" diameter hole to fit standard channel pins.

The floor of each low-single and high-single case is fitted with a removable steel plate. Each plate has six knockouts for cable entrances, 3-9/16" in diameter. Low-double and high-double cases have two plates, one on each side. Plates can be reversed to alter the position of cable entrances in relation to the longitudinal centerline of the case. The plate of a half-case has three knockouts, same size. One-door cases are available with choice of plates, as specified: a three-knockout plate or a plate with an elongated opening to fit couplings as used with pole-mounted cases.

ALUMINUM INSTRUMENT CASES

Fabricated completely of extruded parts, cases are of rugged construction, maintenance-free, and easily transportable. Their weight is approximately half that of equivalent size steel cases.

High-case doors are equipped with latch rods. Low-case doors have a single latch, as the extruded door members provide great rigidity. Non-closable, louver-type ventilators are provided in each door.

Grounding can be provided with a standard ground post, installed in the keyhole channel, to permit external connections where desired.

These cases are provided with one covered opening on each side to which aerial coupling or maintainer-call lamp can be attached in the field.

The floor of each low-single and high-single case is provided with three covered openings for cable entrances, these openings are 3-1/2" in diameter. Low-double and high-double cases have six covered openings.

Aluminum instrument cases are slightly larger than modular, steel instrument cases. (See pages 6 and 7 for sizes.)

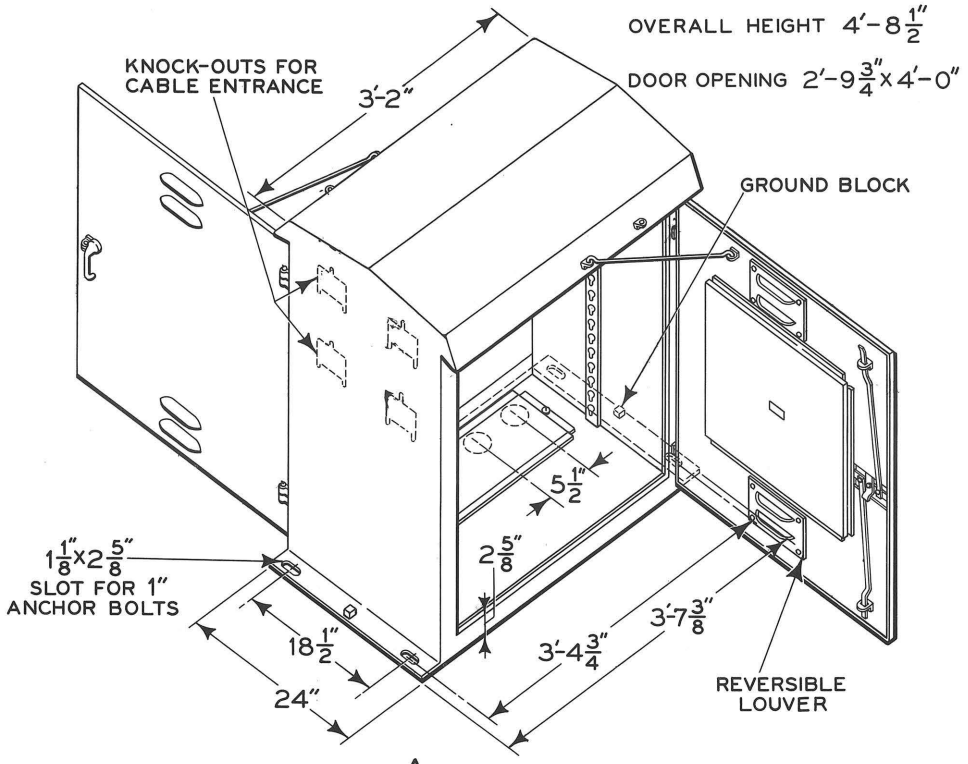

A

LOW-SINGLE CASE

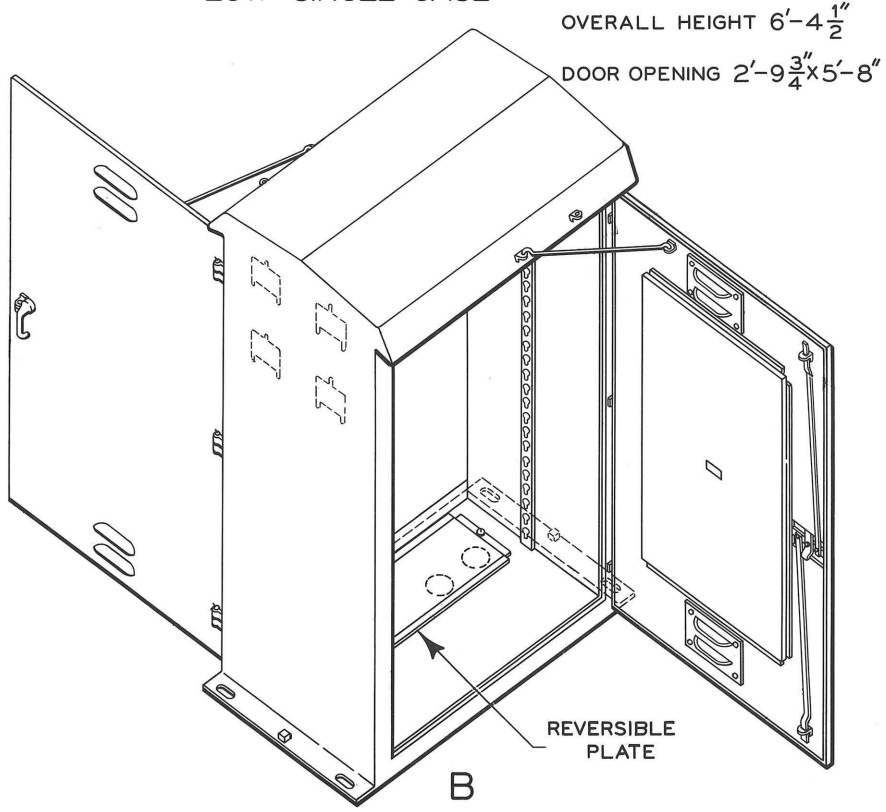

B

HIGH-SINGLE CASE

Modular steel instrument cases.

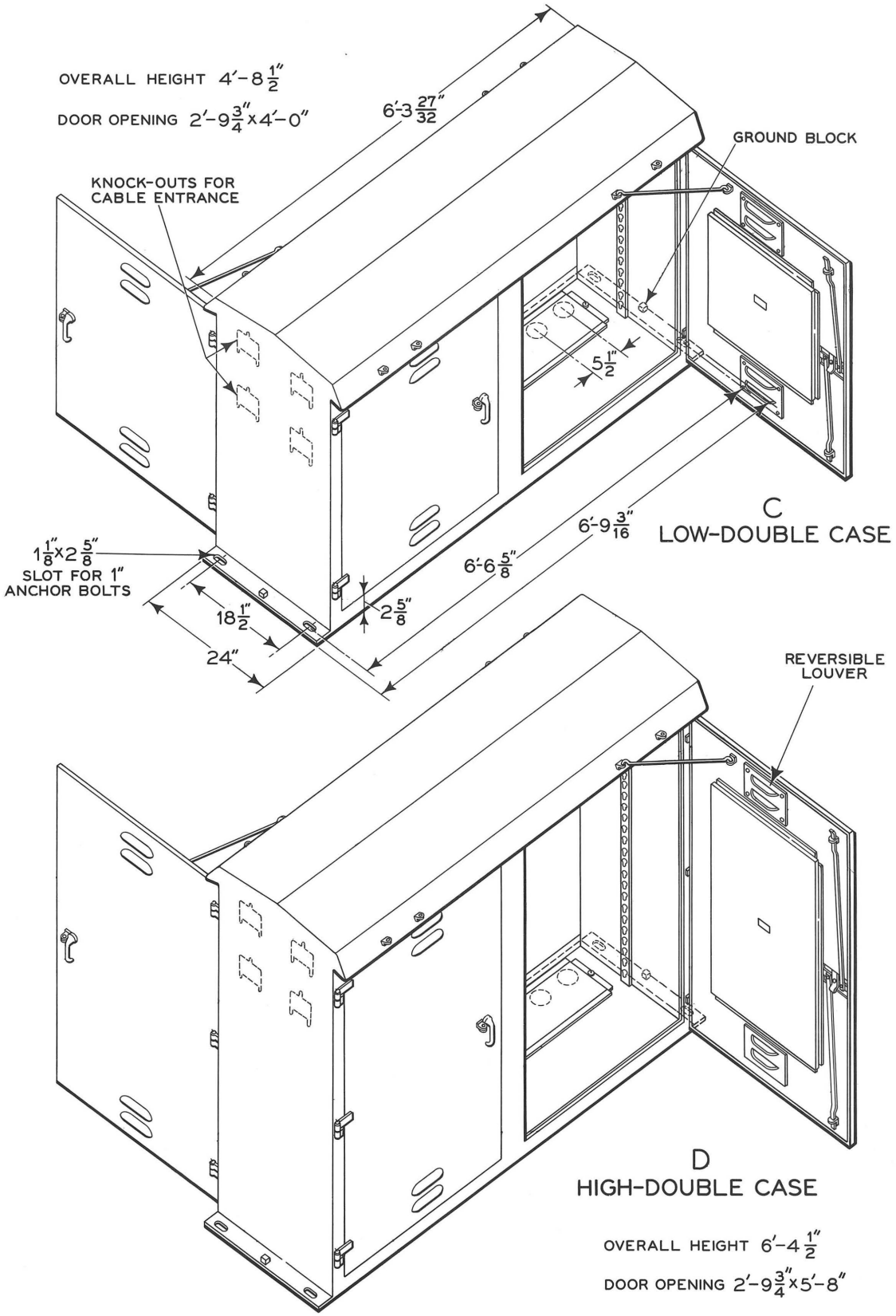

Modular steel instrument cases.

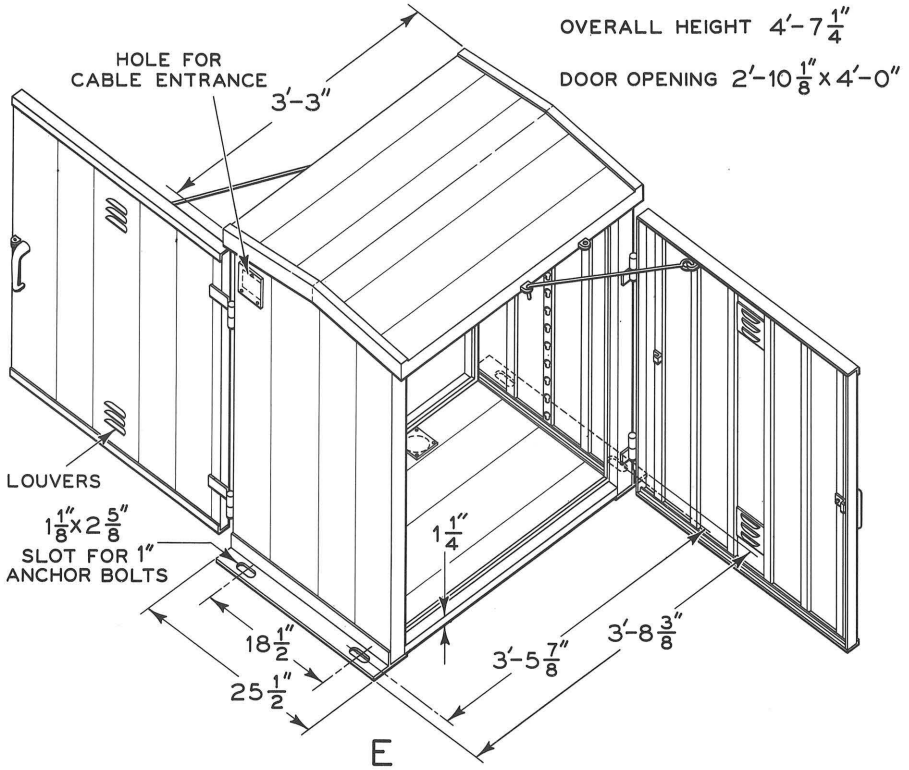

E
LOW-SINGLE CASE

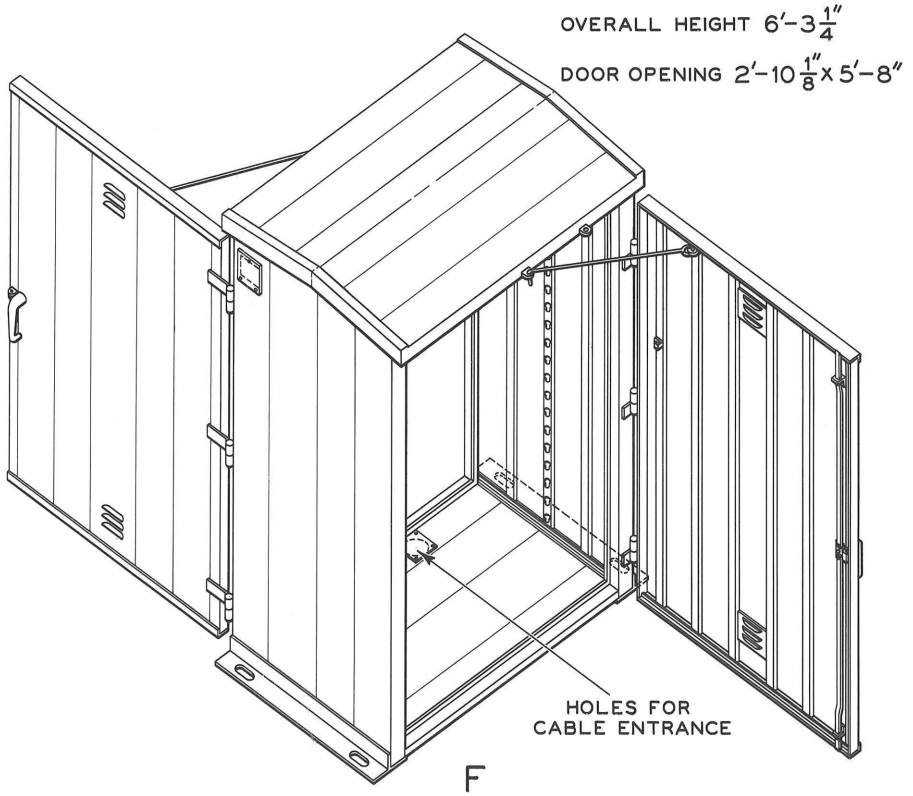

F
HIGH-SINGLE CASE

Modular aluminum instrument cases.

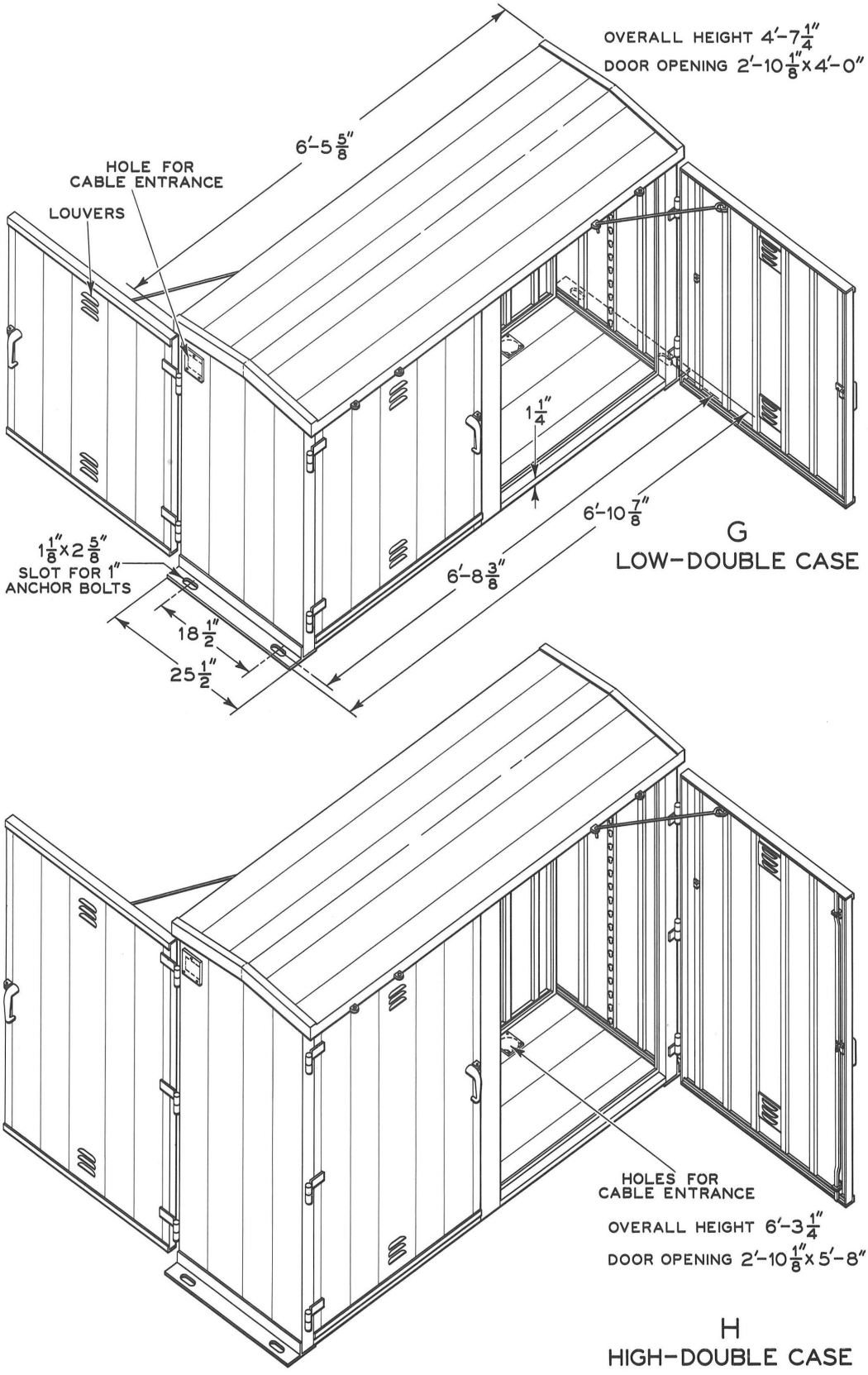

Modular aluminum instrument cases.

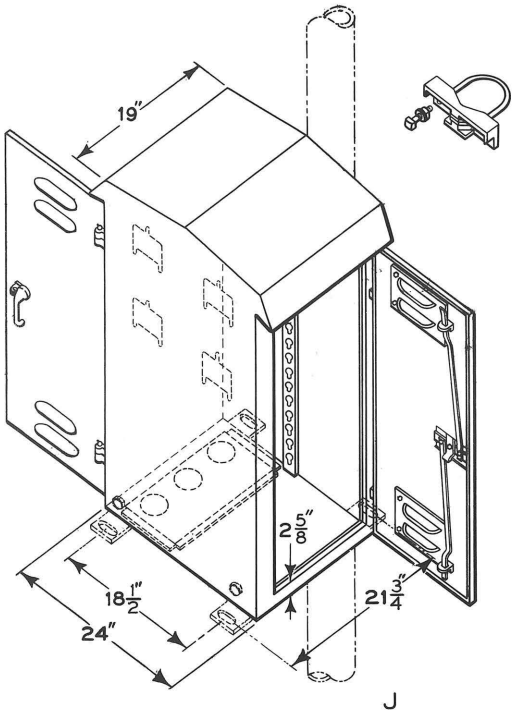

J
HALF CASE
STEEL

OVERALL HEIGHT 4'-8 1/2"
DOOR OPENING 14 3/4" X 4'-0"

FOR BASE OR POLE MOUNTING-
SEE PAGES 18 AND 19 FOR
MOUNTING HARDWARE

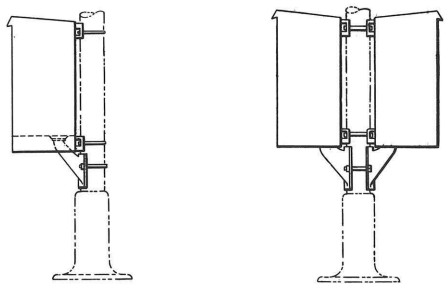

FOR MOUNTING ON METAL POLES
K AND M ONLY

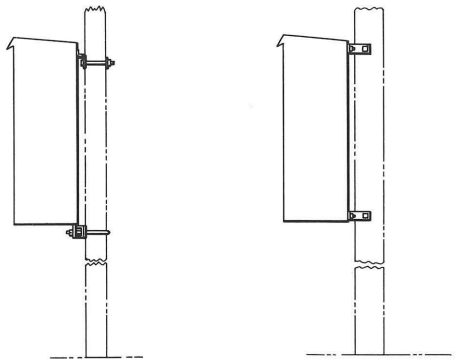

FOR MOUNTING ON CONCRETE POLES
K AND M ONLY

OVERALL HEIGHT 2'-10 1/2"
DOOR OPENING 23 3/4" X 2'-4 1/8"

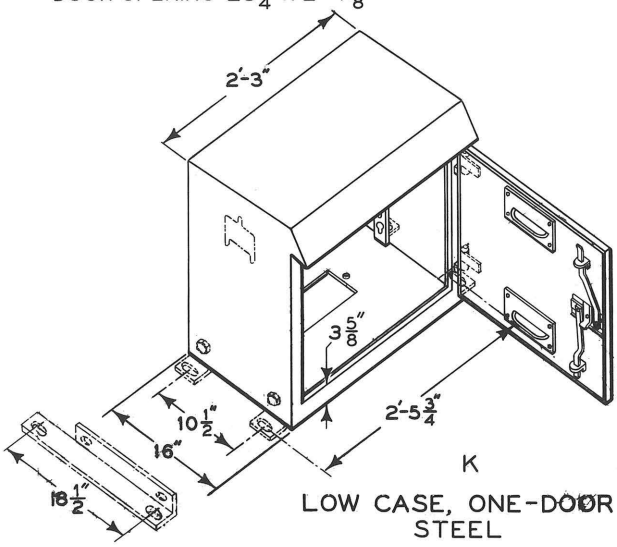

K
LOW CASE, ONE-DOOR
STEEL

OVERALL HEIGHT 3'-10 1/2"
DOOR OPENING 23 3/4" X 3'-4 1/8"

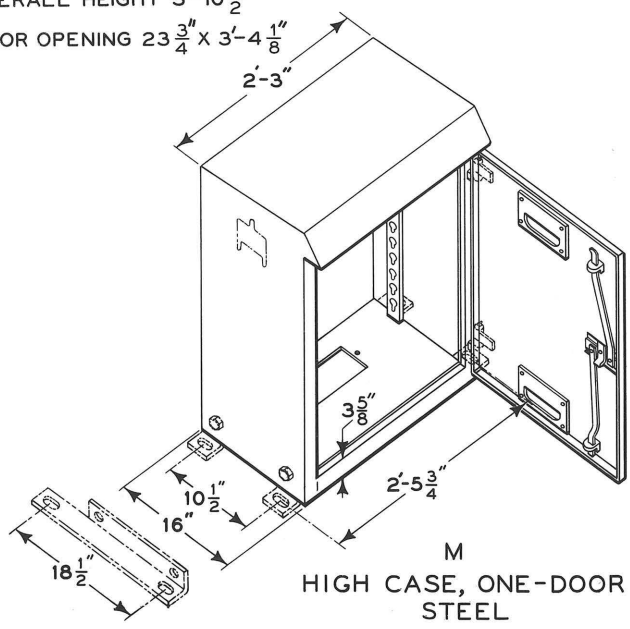

M
HIGH CASE, ONE-DOOR
STEEL

Modular steel instrument cases.

MODULAR STEEL AND ALUMINUM CASES

NOTE: See general information on page 3. Cases are furnished as shown on pages 4-8, without fixtures. To order fixtures, see pages 10-22.

Order by catalog number and name shown in bold type

REF.	NAME	STEEL		REF.	ALUMINUM	
		UNLINED CATALOG NUMBER	LINED CATALOG NUMBER		UNLINED CATALOG NUMBER	LINED CATALOG NUMBER
A	LOW-SINGLE CASE	A5-100	A5-102	E	A5-101	A5-107
B	HIGH-SINGLE CASE	A5-110	A5-112	F	A5-111	A5-117
C	LOW-DOUBLE CASE.	A5-120	A5-122	G	A5-121	A5-127
D	HIGH-DOUBLE CASE.	A5-130	A5-132	H	A5-131	A5-137

REF.	NAME	STEEL	
		UNLINED CATALOG NUMBER	LINED CATALOG NUMBER
	THE FOLLOWING CASES -STEEL ONLY- MAY BE FOUNDATION OR POLE MOUNTED. ORDER MOUNTING HARDWARE FROM PAGES 18 AND 19		
J	HALF CASE	A5-150	A5-152
K	LOW CASE, ONE-DOOR, see page 18 and specify plate Ref. Z or Z1 as required	A5-160	A5-162
M	HIGH CASE, ONE-DOOR, see page 18 and specify. plate Ref. Z or Z1 as required	A5-170	A5-172

NOTE: IF IT IS DESIRED TO HAVE CASES SHIPPED WITH SHELVING AND FIXTURES INSIDE EACH CASE THEY ARE TO BE USED IN, PLEASE SO STATE ON ORDER. FOR EXAMPLE:

3 Low-Single Cases, A5-100, each to include the following:

2 Shelves	P5-150
1 Backboard	P5-100
1 Terminal Board Set	P5-105
1 Coupling Complete	P5-163

2 Low-Single Cases, A5-100, each to include the following:

1 Relay Support	P5-183
4 Relay Supports	P5-185
1 Coupling Complete	P5-163

TYPICAL ARRANGEMENTS OF SHELVING AND BATTERY TRAYS

NOTE: The sketches shown on pages 10 to 14 illustrate a few of the many possible arrangements of backboards, terminal boards, shelves, battery trays and covers.

The backboard may be shifted from front to back by moving the supporting clips as illustrated below.

The vertical spacing of the shelves, trays, etc. may be varied in steps of 2-3/16".

See page 15 for ordering references for backboards and terminal boards.

See pages 18 and 19 for ordering references for detail parts.

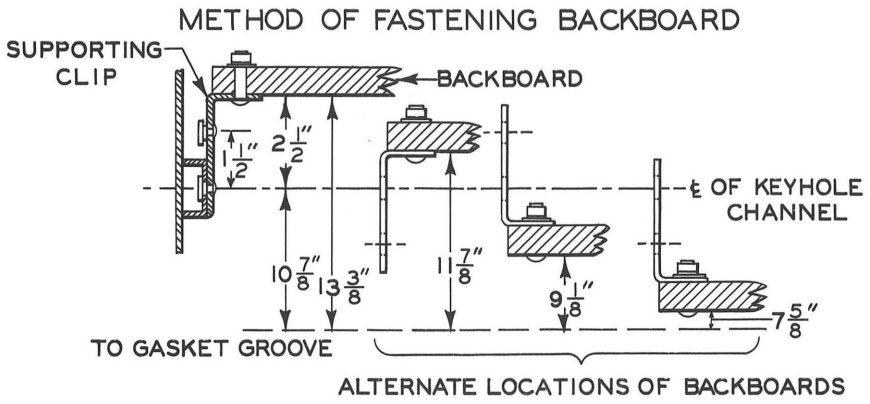

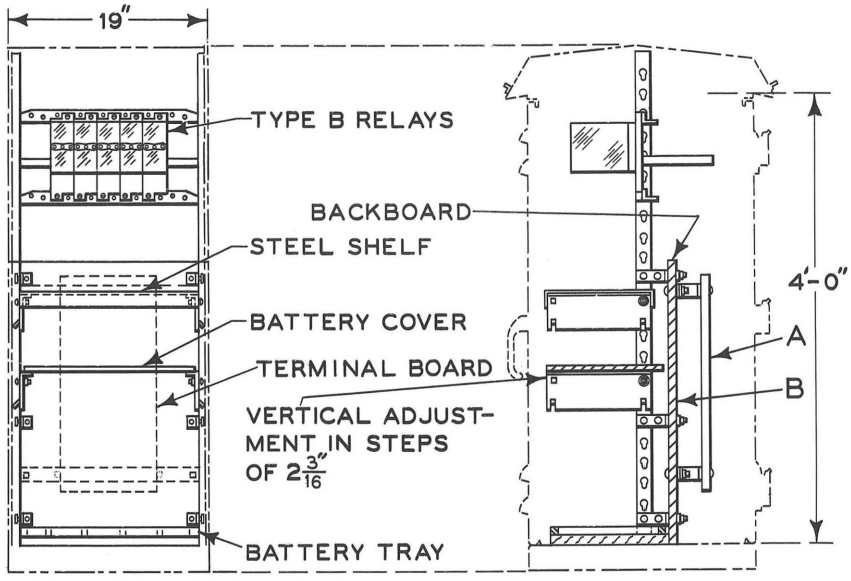

Half-case, five Type B1 relays, one steel shelf, one battery tray and cover (if shelf and battery fixtures are not used, maximum capacity for Type B1 relays is 25).

TYPICAL ARRANGEMENTS OF SHELVING AND BATTERY TRAYS

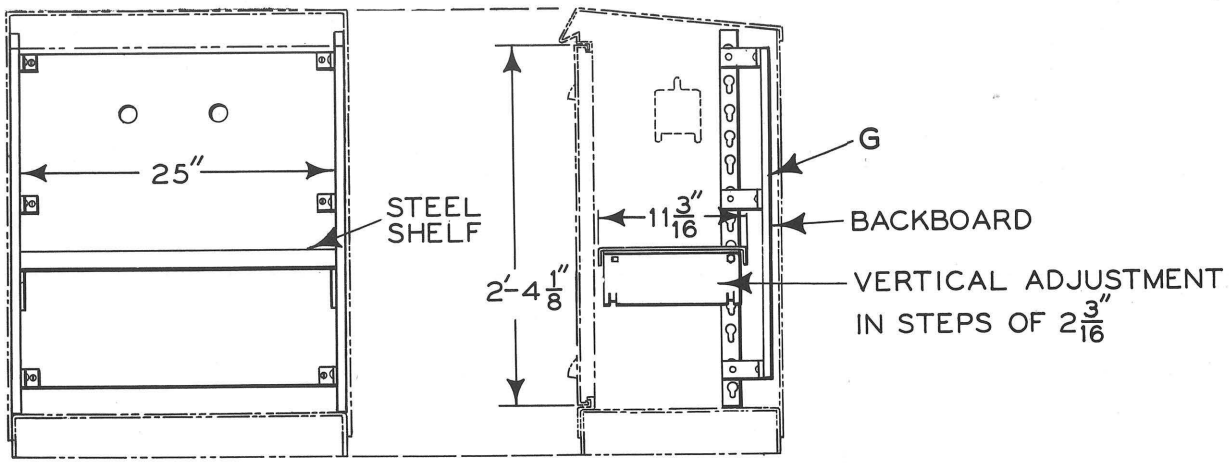

Steel shelf and backboard.
Low case, one-door.

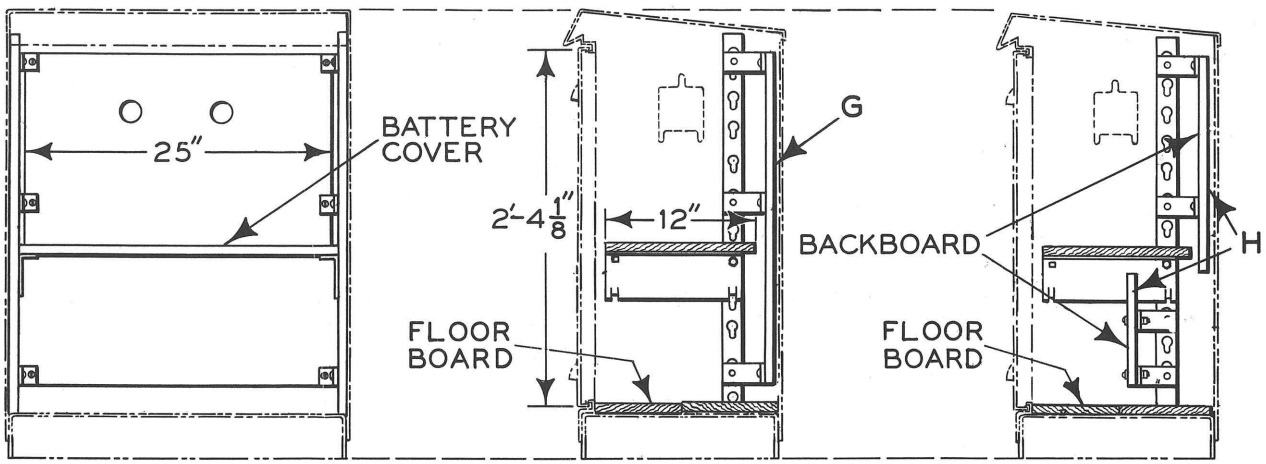

Cover board, floor boards and backboards.
Low case, one-door.

TYPICAL ARRANGEMENTS OF SHELVING AND BATTERY TRAYS

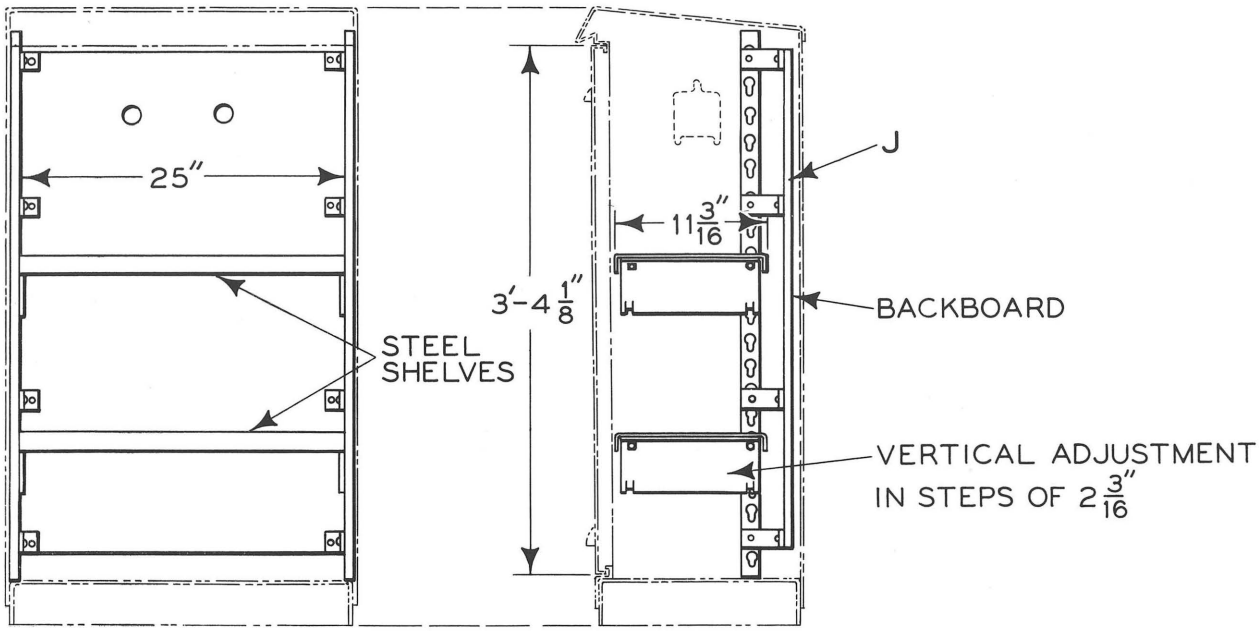

Two steel shelves and backboard.
High case, one-door.

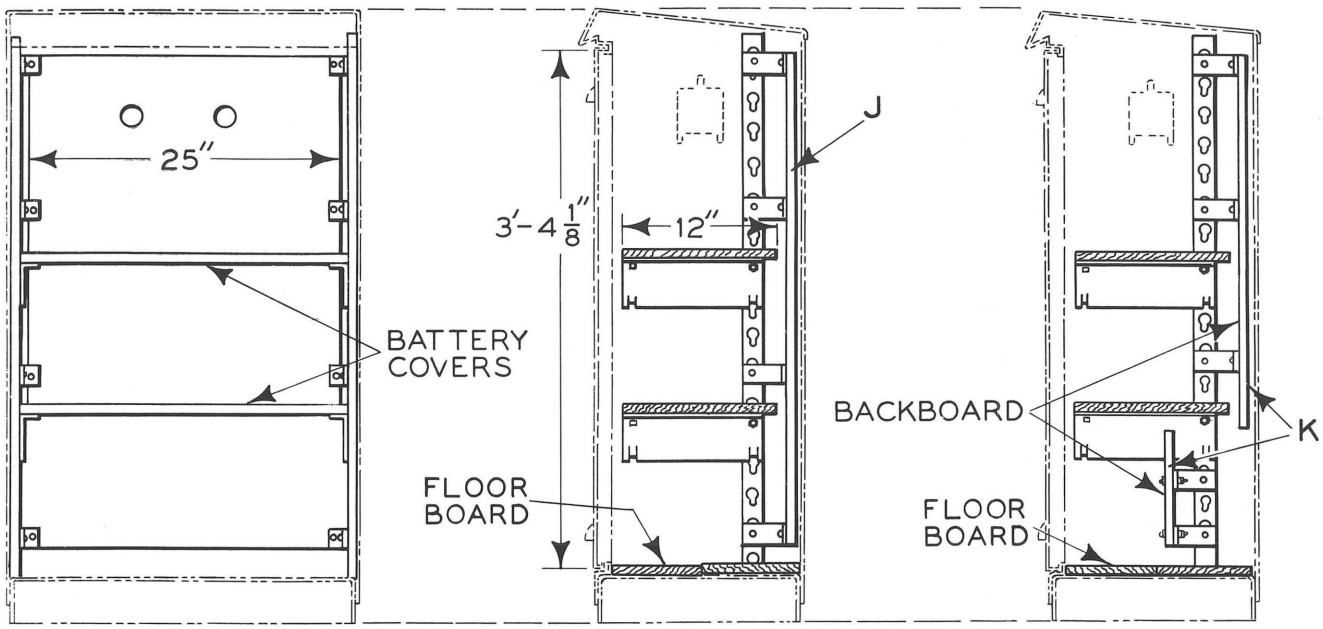

Cover boards, floor boards and backboards.
High case, one-door.

BACKBOARDS AND TERMINAL BOARD SETS

(Reference letters refer to illustrations on pages 8 through 12.)

Order by catalog number and name shown in bold type

REF.	NAME	CATALOG NUMBER
A	TERMINAL BOARD SET, for half case, includes one 10" x 4'-0" board and mounting hardware	P5-107
B	BACKBOARD, for half case, includes mounting hardware.	P5-102
C	BACKBOARD, for low case, includes mounting hardware	P5-100
D	TERMINAL BOARD SET, for low case, includes three 10" x 4'-0" boards, and mounting hardware	P5-105
E	BACKBOARD, for high case, (two piece), includes mounting hardware	P5-101
F	TERMINAL BOARD SET, for high case, includes three 10" x 6'-0" boards and mounting hardware	P5-106
G	BACKBOARD, for low case, one-door, includes mounting hardware	P5-103
H	BACKBOARD, for low case, one-door, (two piece) includes mounting hardware.	P5-104
J	BACKBOARD, for high case, one-door, includes mounting hardware	P5-112
K	BACKBOARD, for high case, one-door, (two piece) includes mounting hardware	P5-113

TYPICAL ARRANGEMENTS FOR TYPE B RELAYS

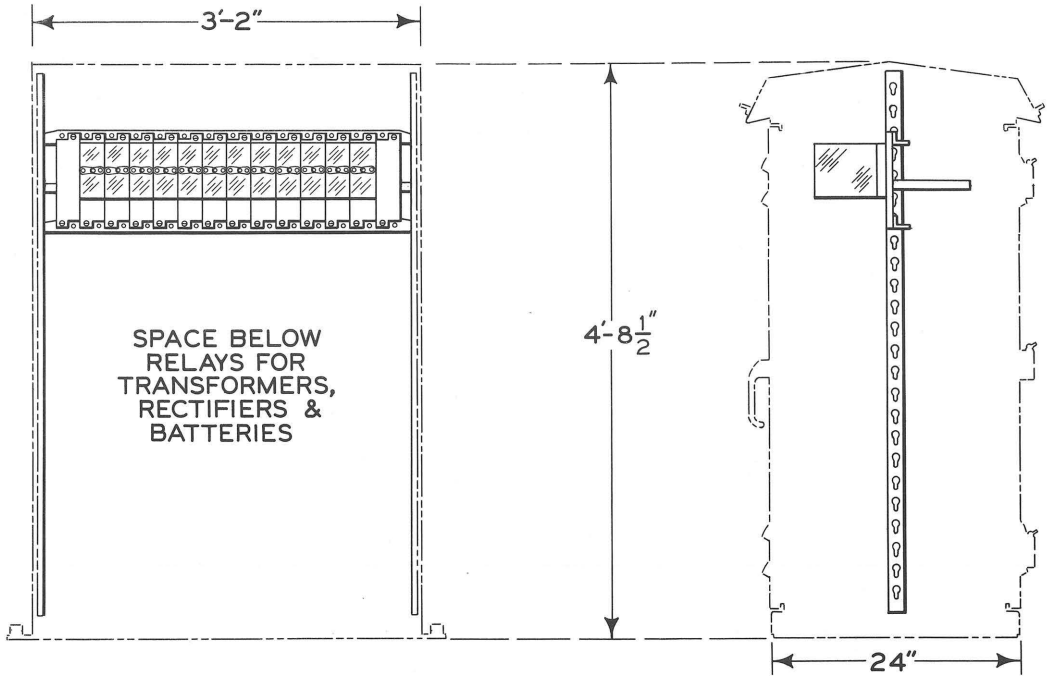

Low-single case (capacity 60 B1 relays).

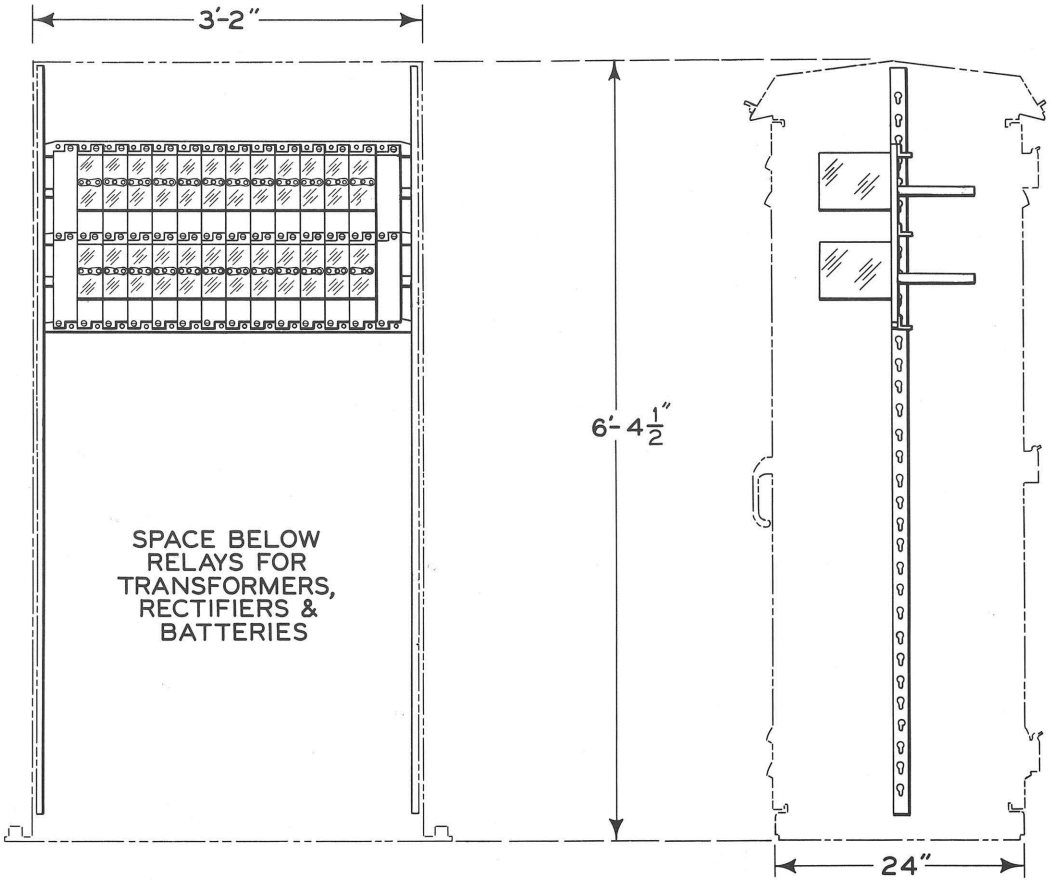

High-single case (capacity 84 B1 relays).

TYPICAL ARRANGEMENTS FOR TYPE B RELAYS

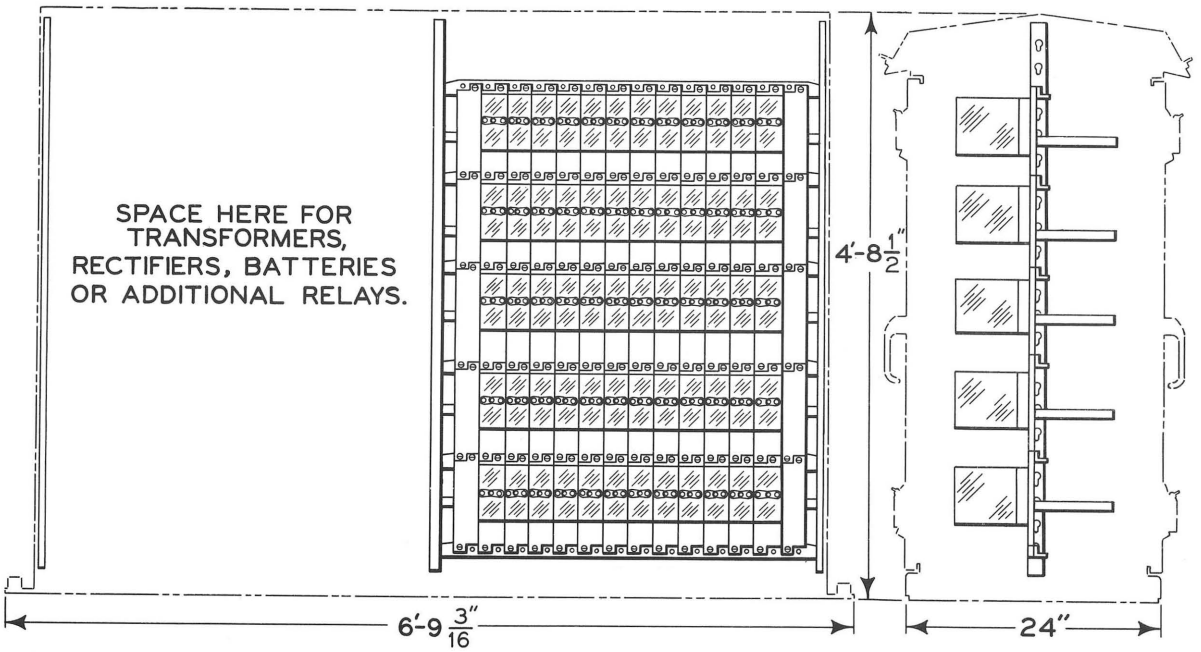

Low-double case (capacity 60 B1 relays per side, max. 12 per row)

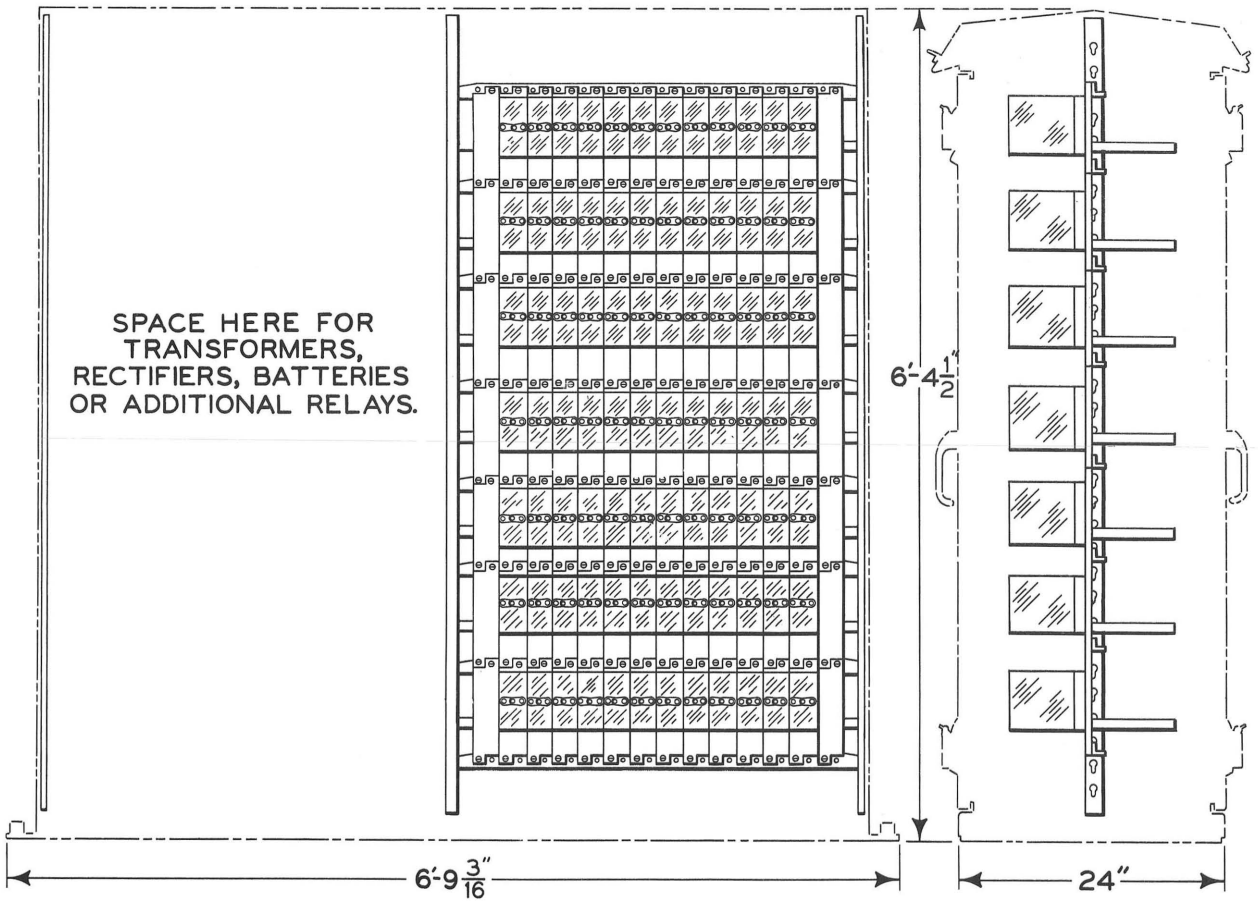

High-double case (capacity 84 B1 relays per side, max. 12 per row)

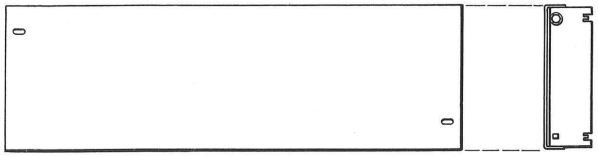
A-STEEL SHELF

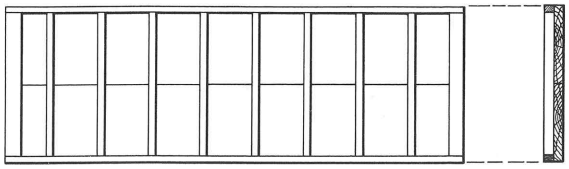
B-BATTERY TRAY

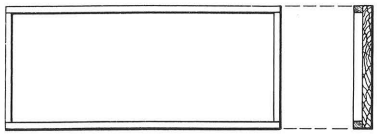
C-BATTERY TRAY

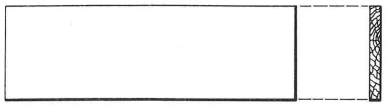
D-FLOOR BOARD
FOR ONE-DOOR CASE ONLY

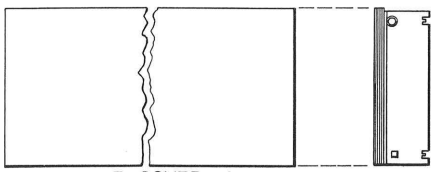
E-COVER BOARD

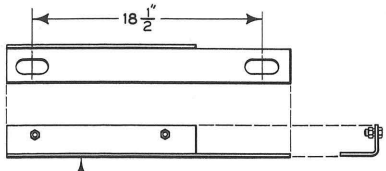

P-MOUNTING ANGLES

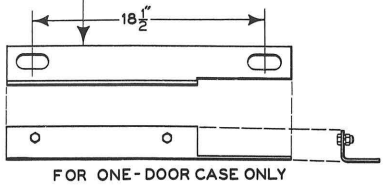

FOR ONE-DOOR CASE ONLY

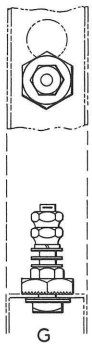
G
GROUND POST

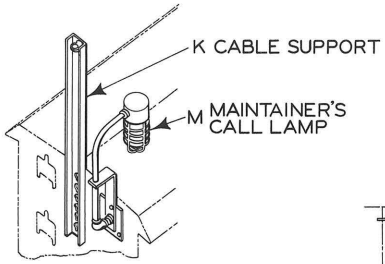

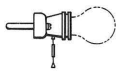
N-LIGHT SOCKET

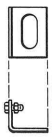
R-MOUNTING ANGLES
FOR HALF CASE AND ONE-DOOR CASE

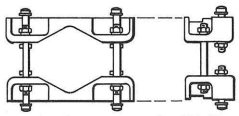
S-CLAMP-DOUBLE
FOR ONE-DOOR CASE ONLY
(FOR METAL POLES ONLY)

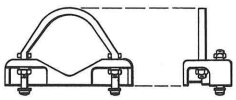
T-CLAMP
FOR HALF CASE AND ONE-DOOR CASE
(FOR METAL POLES ONLY)

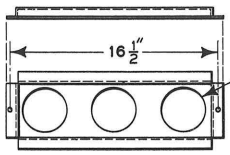

Z-PLATE
FOR ONE-DOOR CASE ONLY

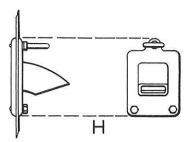
H
CABLE ENTRANCE COUPLING

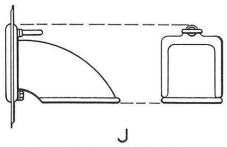
J
CABLE ENTRANCE COUPLING

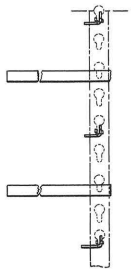

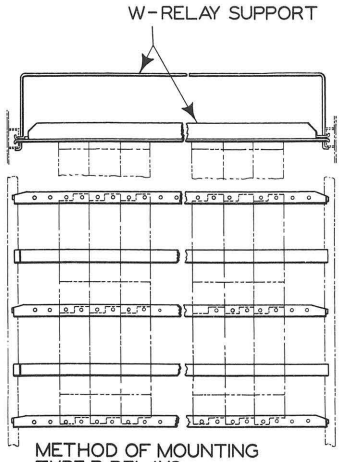

METHOD OF MOUNTING TYPE B RELAYS

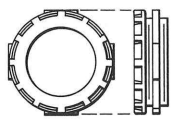
Y

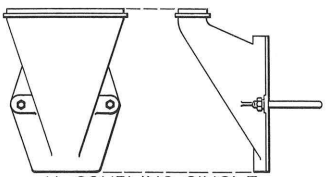
U-COUPLING-SINGLE
FOR ONE-DOOR CASE ONLY
(FOR METAL POLES ONLY)

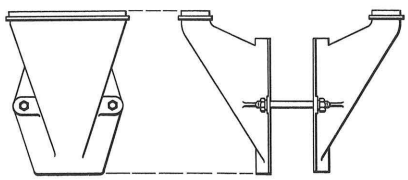
V-COUPLING-DOUBLE
FOR ONE-DOOR CASE ONLY
(FOR METAL POLES ONLY)

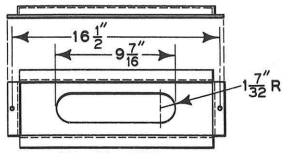

Z1-PLATE
FOR ONE-DOOR CASE ONLY

Fixtures for modular steel instrument cases.

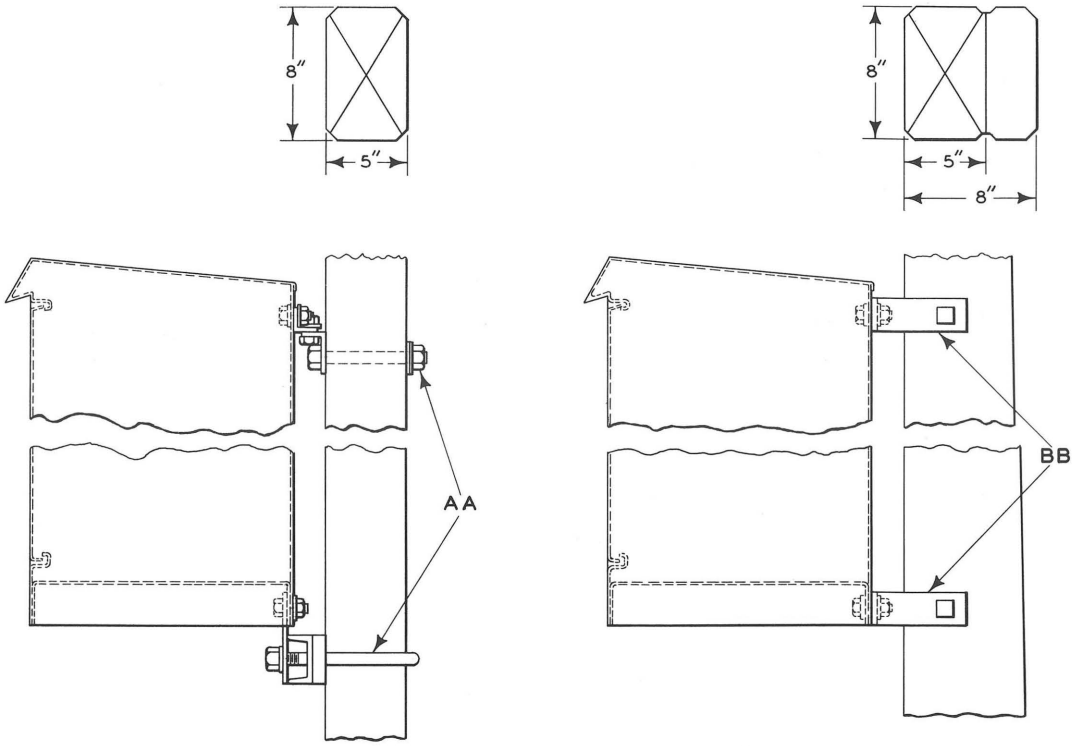

METHODS OF MOUNTING ONE-DOOR CASES TO CONCRETE POLES

FIXTURES FOR MODULAR STEEL INSTRUMENT CASES

Order by catalog number and name shown in bold type

REF.	NAME	CATALOG NUMBER
A	SHELF, steel, complete with mounting brackets. For all cases except half case and one-door	P5-150
A1	As above, except for half case	P5-151
A2	Same as Ref. A, except for one-door case	P5-152
B	TRAY, battery, wood, 3' x 19-1/2" acid-resistant finish, with cleats. For all cases except half case and one-door	P5-153
B1	As above, except 3' x 12-1/2"	P5-154
B2	Same as Ref. B, except 17" x 12-1/2" for half case	P5-155
C	TRAY, battery, wood, 3' x 9-7/8" acid-resistant finish, with end and side cleats only. For all cases except half case and one-door case	P5-156
C1	As above, except 17" x 9-7/8" for half case	P5-157
D	BOARD, floor, for one-door case, two piece set	P5-158

(Continued on following page)

FIXTURES FOR MODULAR STEEL INSTRUMENT CASES

Order by catalog number and name shown in bold type

REF.	NAME	CATALOG NUMBER
E	BOARD, cover, complete with mounting brackets, acid-resistant finish. For all cases except half case and one-door case	P5-159
E1	As above, except for half case	P5-160
E2	Same as Ref. E, for one-door case	P5-161
G	GROUND POST COMPLETE, 5/16"-18, with hardened steel nut with serrated teeth which scrape paint from keyhole slot to ensure good ground connection	P5-162
H	COUPLING COMPLETE, for aerial cable entrance, 2" x 2" opening, with eyebolt, plate, bolts and washers for attaching to case.	P5-163
J	COUPLING COMPLETE, for aerial cable entrance, 3-1/8" x 3-1/4" opening, with eyebolt, plate, bolts and washers for attaching to case	P5-164
K	CABLE SUPPORT COMPLETE, for low-single and low-double cases, includes 1" eyebolt, also bolts, nuts and washers for mounting to case	P5-165
K1	As above, except for high-single and high-double cases	P5-166
M	MAINTAINER'S CALL LAMP COMPLETE, with socket for medium-screw base lamp which is also fitted with adapter for using standard, 2-pin, candelabra, signal lamp, includes all parts for mounting to case	P5-167
N	LIGHT SOCKET, pull-chain type, includes screws for fastening to bracket	P5-168
P	MOUNTING ANGLE SET, includes two angles and all mounting hardware, for adapting one-door case to standard foundation.	P5-169
R	MOUNTING ANGLE SET, includes four angles and all mounting hardware, for half case and one-door case	P5-170
S	CLAMP COMPLETE, double set, includes all mounting hardware for 4" pipe, for one-door cases only when mounted back-to-back . .	P5-171
S1	As above, except for 5" pipe.	P5-172
S2	Same as Ref. S, except for 6" pipe	P5-173
T	CLAMP COMPLETE, single, includes all mounting hardware, for 4" pipe, for half case and one-door case	P5-174
T1	As above, except for 5" pipe	P5-175
T2	Same as Ref. T, except for 6" pipe	P5-176
U	COUPLING COMPLETE, single, includes all mounting hardware, for 4" pipe, for one-door case.	P5-177
U1	As above, except for 5" pipe	P5-178
U2	Same as Ref. U, except for 6" pipe	P5-179

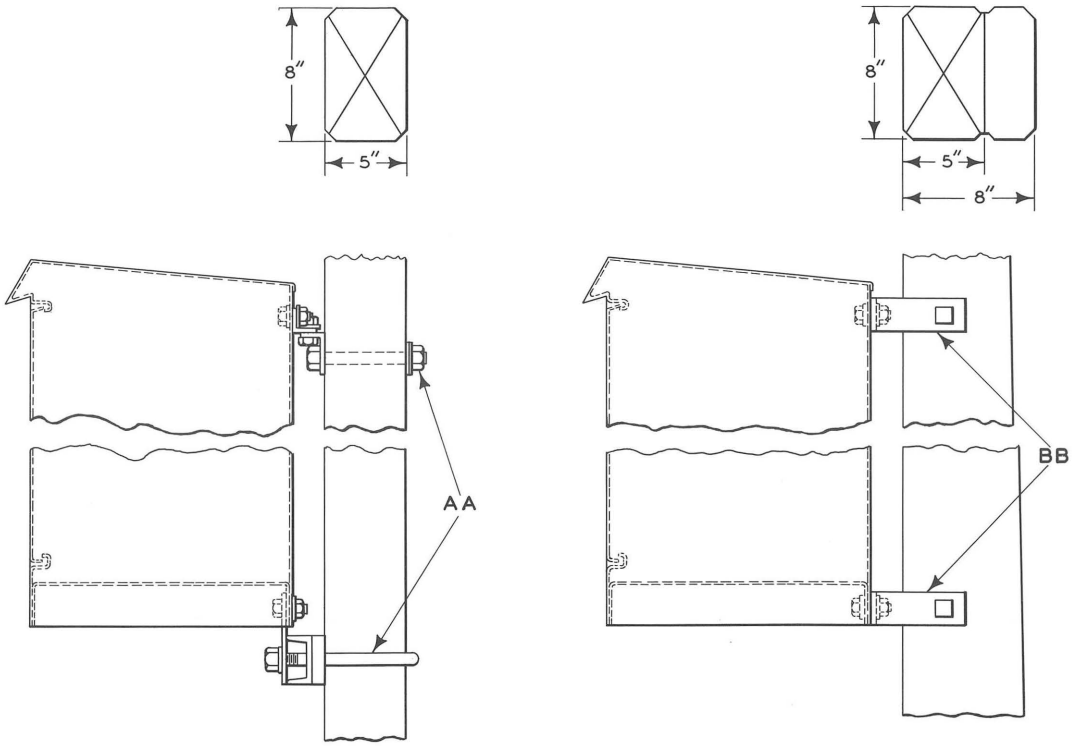

METHODS OF MOUNTING ONE-DOOR CASES TO CONCRETE POLES

FIXTURES FOR MODULAR INSTRUMENT CASES

Order by catalog number and name shown in bold type

REF.	NAME	CATALOG NUMBER
*A	SHELF, steel, complete with mounting brackets. For all cases except half case and one-door	P5-150
A1	As above, except for half case.	P5-151
A2	Same as Ref. A, except for one-door case	P5-152
*B	TRAY, battery, wood, 35 3/4" x 12-1/2" acid-resistant finish, with cleats for all cases except half case and one-door	P5-154
*B1	As above, except 35 3/4" x 19-1/2"	P5-153
B2	Same as Ref. B, except 17" x 12-1/2" for half case	P5-155
*C	TRAY, battery, wood, 35 3/4" x 9-7/8" acid-resistant finish, with end and side cleats only. For all cases except half case and one-door case	P5-156
C1	As above, except 17" x 9-7/8" for half case	P5-157

(Continued on following page)

FIXTURES FOR MODULAR INSTRUMENT CASES

Order by catalog number and name shown in bold type

REF.	NAME	CATALOG NUMBER
*D	BOARD, cover, complete with mounting brackets, acid-resistant finish. For all cases except half case and one-door case	P5-159
D1	As above, except for half case	P5-160
D2	Same as Ref. D, except for one-door case	P5-161
E	BOARD, floor, for one-door case, two piece set	P5-158
*G	GROUND POST COMPLETE, 5/16"-18, with hardened steel nut with serrated teeth which scrape paint from keyhole slot to ensure good ground connection	P5-162
H	COUPLING COMPLETE, for steel cases, for aerial cable entrance, 2" x 2" opening, with eyebolt, plate, bolts and washers for attaching to case	P5-163
H1	As above, except for aluminum cases	P5-199
J	COUPLING COMPLETE, for steel cases, for aerial cable entrance, 3-1/8" x 3-1/4" opening, with eyebolt, plate, bolts and washers for attaching to case	P5-164
J1	As above, except for aluminum cases	P5-200
K	CABLE SUPPORT COMPLETE, for low-single and low-double steel cases, includes 1" eyebolt, also bolts, nuts and washers for mounting to case	P5-165
K1	As above, except for high-single and high-double steel cases	P5-166
K2	Same as Ref. K, except for aluminum cases	P5-201
K3	Same as Ref. K1, except for aluminum cases	P5-202
*M	MAINTAINER'S CALL LAMP COMPLETE, with socket for medium-screw base lamp which is also fitted with adapter for using standard, 2-pin, candelabra, signal lamp, includes all parts for mounting to case	P5-167
N	LIGHT SOCKET, pull-chain type, for steel cases, includes screws for fastening to bracket	P5-168
N1	As above, except for aluminum cases	P5-204
P	MOUNTING ANGLE SET, includes two angles and all mounting hardware, for adapting one-door case to standard foundation	P5-169
R	MOUNTING ANGLE SET, includes four angles and all mounting hardware, for half case and one-door case	P5-170
S	CLAMP COMPLETE, double set, includes all mounting hardware for 4" pipe, for one-door cases only when mounted back-to-back	P5-171
S1	As above, except for 5" pipe	P5-172

FIXTURES FOR MODULAR INSTRUMENT CASES

Order by catalog number and name shown in bold type

REF.	NAME	CATALOG NUMBER
S2	Same as Ref. S, except for 6" pipe	P5-173
T	CLAMP COMPLETE, single, includes all mounting hardware, for 4" pipe, for half case and one-door case	P5-174
T1	As above, except for 5" pipe.	P5-175
T2	Same as Ref. T, except for 6" pipe	P5-176
U	COUPLING COMPLETE, single, includes all mounting hardware, for 4" pipe, for one-door case	P5-177
U1	As above, except for 5" pipe	P5-178
U2	Same as Ref. U, except for 6" pipe	P5-179
V	COUPLING COMPLETE, double, includes all mounting hardware, for 4" pipe, for 2 one-door cases, mounted back-to-back	P5-180
V1	As above, except for 5" pipe	P5-181
V2	Same as Ref. V, except for 6" pipe	P5-182
*W	RELAY SUPPORT, for steel cases, except half case and one-door, also for low- and high-single aluminum cases. For first (or single row) of Type B Relays, complete with wiring harness support..	P5-183
W1	RELAY SUPPORT, for steel cases, for first (or single row) of Type B Relays, complete with wiring harness support, for half case	P5-184
*W2	RELAY SUPPORT, for steel cases, except half case and one-door also for low- and high-single aluminum cases. For each additional row of Type B Relays, complete with wiring harness support.	P5-185
W3	RELAY SUPPORT, for steel cases, for each additional row of Type B Relays, complete with wiring harness support, for half case	P5-186
X	RELAY SUPPORT, for low- and high-double aluminum cases, for first (or single row) of Type B Relays, complete with wiring harness support	P5-205
X1	RELAY SUPPORT, for low- and high-double aluminum cases, for each additional row of Type B Relays, complete with wiring harness support.	P5-206
*Y	BUSHING, 3", insulating, for 3-9/16" dia. knockouts in bottom of case	P5-187
Z	PLATE, with three 3-9/16" dia. knockouts, includes mounting screws, and washers	P5-189
Z1	PLATE, with elongated opening, includes mounting screws and washers	P5-191

FIXTURES FOR MODULAR INSTRUMENT CASES

Order by catalog number and name shown in bold type

REF.	NAME	CATALOG NUMBER
AA	SUPPORT COMPLETE, includes all hardware for mounting one-door case to A. A. R. concrete post	P5-195
BB	SUPPORT COMPLETE, includes all hardware for mounting one-door case to tapered concrete pole	P5-197

Note: Items marked * are for both steel and aluminum cases, all other fixtures are for cases as described under each item.

CATALOG SECTION 5

Base-of-Mast Instrument Cases with Adjustable Fixtures

CONTENTS

	Page
Low Case, Front and Rear Doors	32
Low Case, Front Door only	32
High Case, Front and Rear Doors	32
Typical Fixture Arrangements	34-35
Adjustable Fixtures	36
Backboard and Terminal Board Sets	35
Cable Entrance Material	37
Replacement Parts	39

TOOLS FOR TRANSPORTATION

GENERAL RAILWAY SIGNAL COMPANY

ROCHESTER, NEW YORK

Printed in U. S. A.

A1677

July 1962

High base-of-mast instrument case.

Base-of-Mast Instrument Cases with Adjustable Fixtures

GENERAL DESCRIPTION

Base-of-mast instrument cases arranged for adjustable fixtures are available in two sizes: low or high. The low case is available with front and rear doors, or front door only. You can order shelves, backboards, terminal boards, relay support bars, etc. as you require and install them in any arrangement you wish. (See pages 34-39 for ordering fixtures.)

Cases are constructed of heavy-gauge steel, are strong, durable and corrosion resistant.

Integral keyhole channels, as shown on page 32, allow fixtures to be installed as needed or changed in the future. Each fixture can be moved up or down in increments of 2-3/16 inches.

Door hooks are provided for holding the doors open at 90 degrees. Doors are equipped with handles for padlocking. Doors are replaceable and are gasketted, thereby ensuring a tight seal between door and case. Louver type ventilators may be opened or closed by inverting louvers on the inside.

Mounting bracket for pull-chain light socket is provided in roof of case.

A shield is provided in the top of each case to trap any condensation drippings from inside signal pole. A metal cap covers the 4-3/8" diameter opening on the top of each case. It is easily removed when a signal or a cable post is mounted on the case.

Two 2-1/2" pipe plugged holes in the top may be used for installing cable entrance post.

Cases can be furnished either lined or unlined. The lining consists of 1/2" thick insulating board.

Cases are available with hardware for mounting Type B relays - capacities are shown in illustrations.

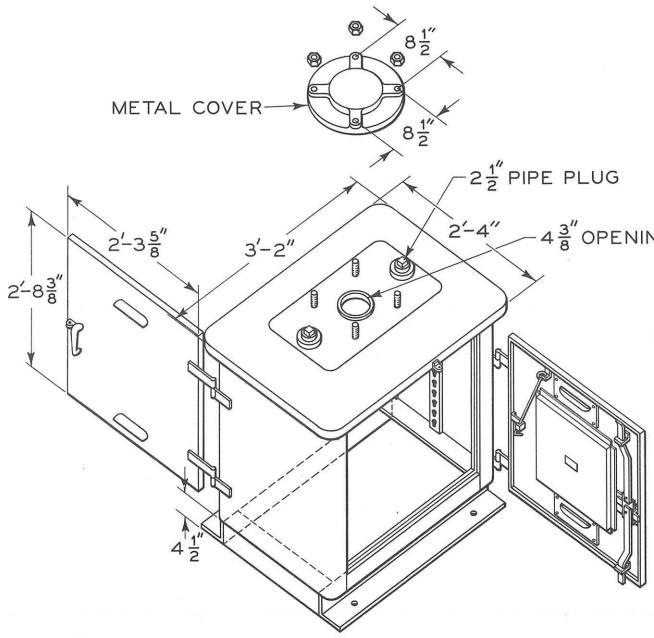

A

LOW BASE-OF-MAST CASE
FOR ADJUSTABLE FIXTURES

OUTSIDE CASE DIMENSIONS		
REF.	A & C	B
HEIGHT	3'-8 1/8"	5'-7 1/8"
WIDTH	2'-10"	2'-10"
DEPTH	2'-0"	2'-0"

FOR INSIDE DIMENSIONS,
SEE PAGES 34 & 35

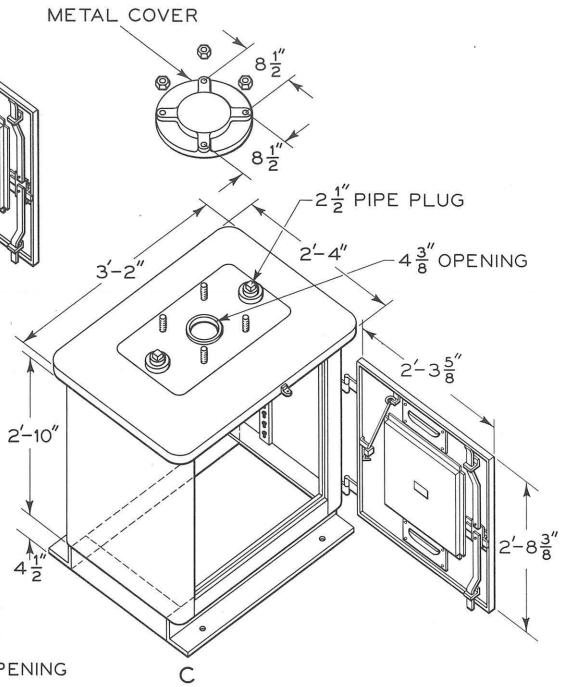

C

LOW BASE-OF-MAST CASE
FOR ADJUSTABLE FIXTURES
FRONT DOOR ONLY

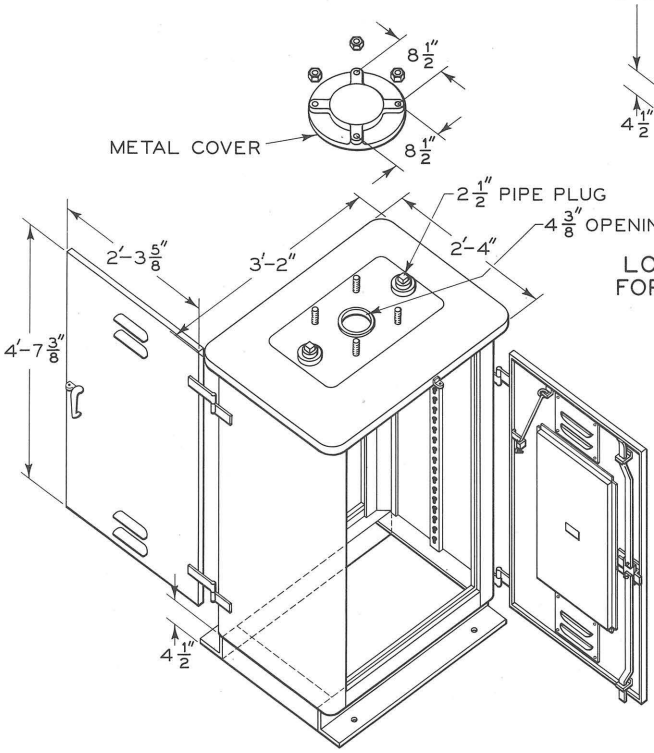

B

HIGH BASE-OF-MAST CASE
FOR ADJUSTABLE FIXTURES

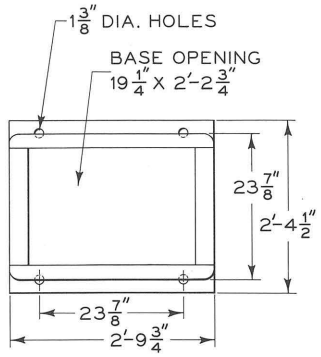

BASE PLAN SHOWING
MOUNTING HOLES

Base-of-mast instrument cases.

BASE-OF-MAST INSTRUMENT CASES

NOTE: See general information on page 31. Cases are furnished as shown on page 32, without fixtures.
To order fixtures, see pages 36-39.
For cable posts, see page 37.

Order by catalog number and name shown in bold type

REF.	NAME	UNLINED CASES CATALOG NUMBER	LINED CASES CATALOG NUMBER
A	LOW CASE,front and rear doors	A5-200	A5-202
B	HIGH CASE,front and rear doors	A5-210	A5-212
C	LOW CASE,front door only	A5-215	A5-217

NOTE: IF IT IS DESIRED TO HAVE CASES SHIPPED WITH SHELVING AND FIXTURES INSIDE EACH CASE THEY ARE TO BE USED IN, PLEASE SO STATE ON ORDER.
FOR EXAMPLE:

3 Low Cases A5-200, each to include the following:

2 Battery Shelves	P5-341
1 Backboard	P5-350
2 Terminal Boards	P5-347
1 Battery Tray (Floor)	P5-340
1 Floor Board	P5-343
1 Cable Entrance Post	A5-225

2 Low Cases A5-200, each to include the following:

1 Relay Support	P5-355
1 Backboard	P5-352
1 Battery Tray (Floor)	P5-340
1 Terminal Board	P5-347
1 Floor Board	P5-343
1 Cable Post	A5-221

TYPICAL ARRANGEMENTS OF SHELVING AND BATTERY TRAYS

NOTE: The sketches shown on these pages illustrate only a few of the many possible arrangements of Type B relays, backboards, terminal boards, shelves, battery trays, and covers.

The vertical spacing of the shelves, trays, etc. may be varied in steps of 2-3/16".

See page 35 for ordering backboards and terminal boards.
See pages 36-39 for ordering fixtures.

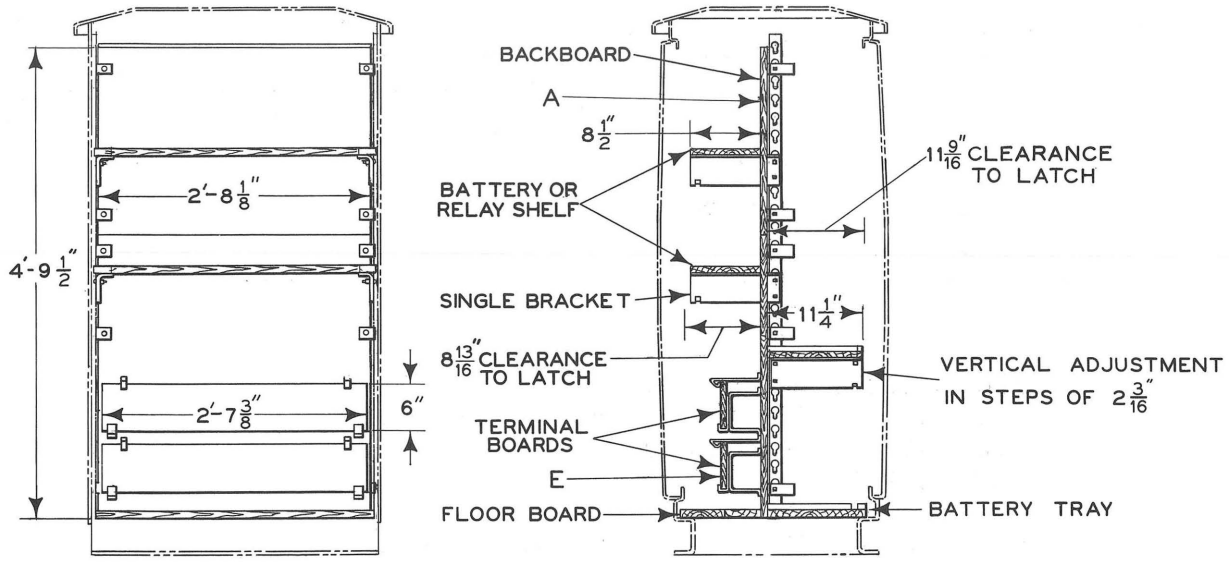

Three shelves for batteries or relays, one floor battery tray and two terminal boards. High case.

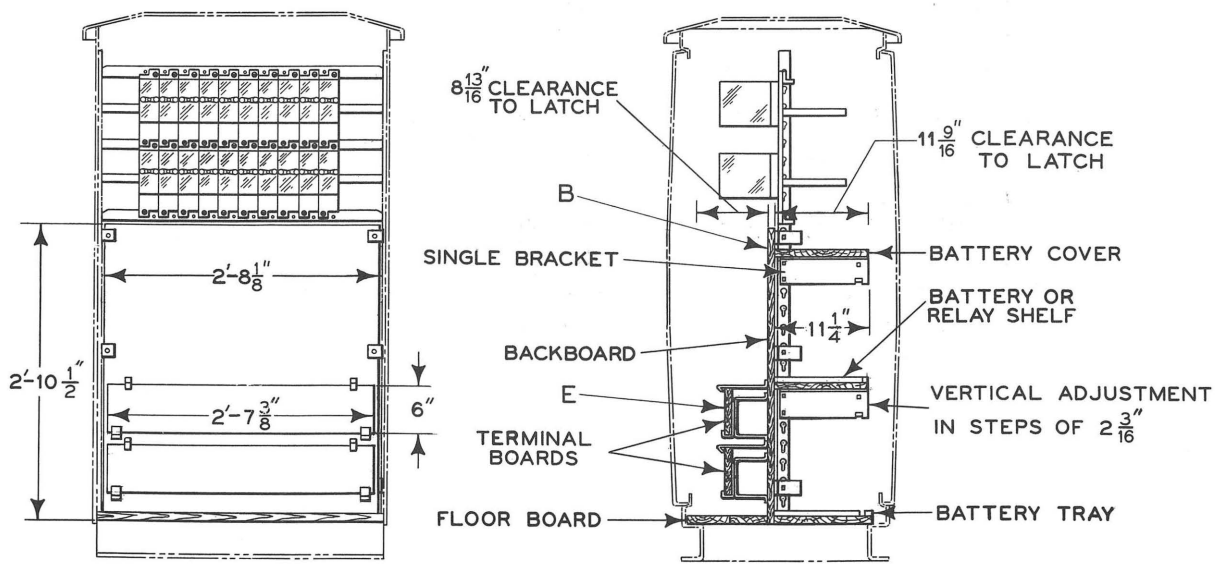

Two rows of type B1 relays, (total 20), one shelf for batteries or relays, one floor battery tray and two terminal boards. High case.

TYPICAL ARRANGEMENTS OF SHELVING AND BATTERY TRAYS

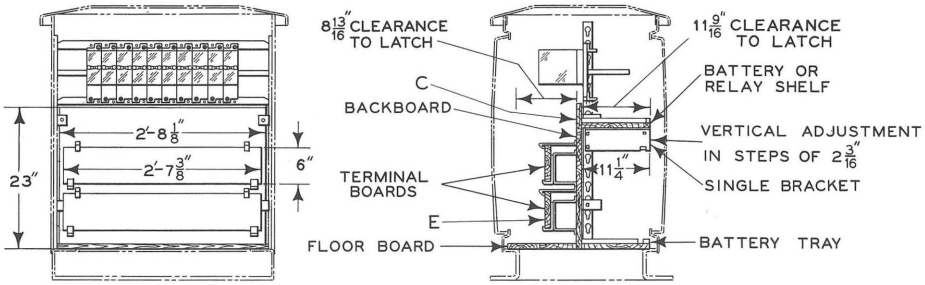

One row of type B1 relays, (total 10), one floor battery tray and two terminal boards.
Low case.

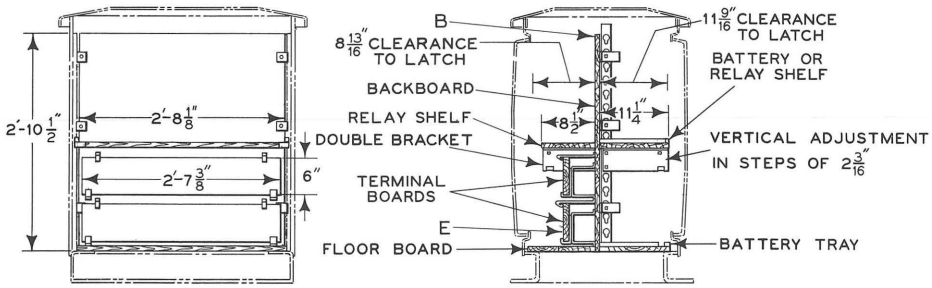

Two shelves for batteries or relays, one floor battery tray and two terminal boards.
Low case.

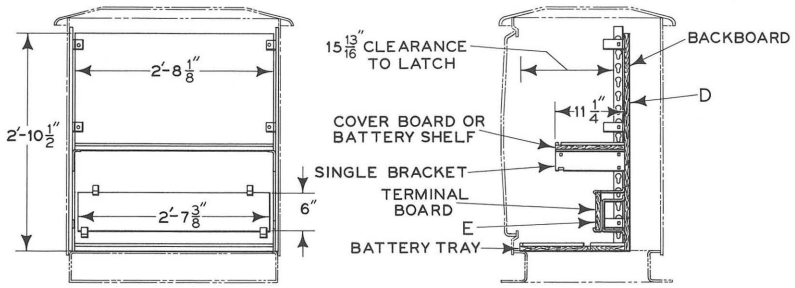

One cover board or battery shelf, one terminal board and one floor battery tray
Low case - single door

Order by catalog number and name shown in bold type

REF.	NAME	CATALOG NUMBER
A	BACKBOARD, for high case, (two piece) includes mounting hardware .	P5-349
B	BACKBOARD, for high case or low double-door case, includes mounting hardware	P5-350
C	BACKBOARD, for low double-door case, includes mounting hardware .	P5-352
D	BACKBOARD, for low single-door case, includes mounting hardware .	P5-351
E	TERMINAL BOARD, wood, includes mounting hardware	P5-347

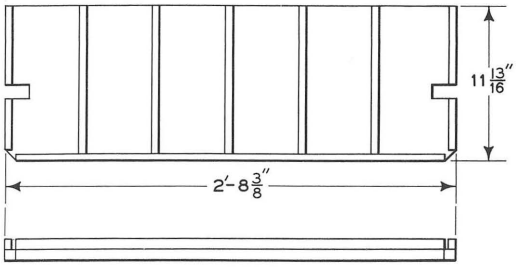

A-BATTERY TRAY-FLOOR

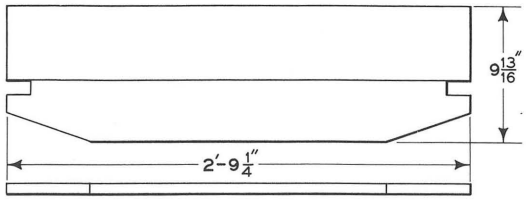

E-FLOOR BOARD

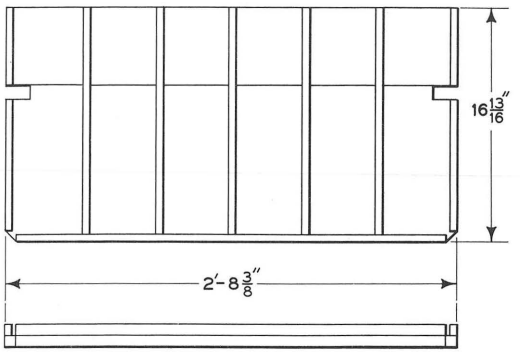

B-BATTERY TRAY-FLOOR

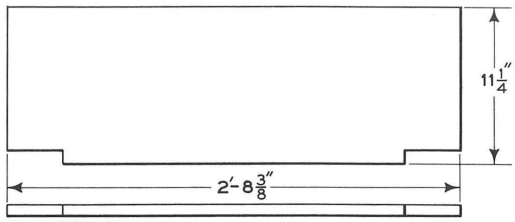

F-BATTERY COVER BOARD

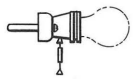

H
LIGHT SOCKET

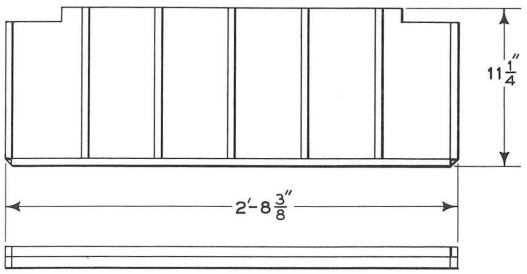

C-BATTERY OR RELAY SHELF

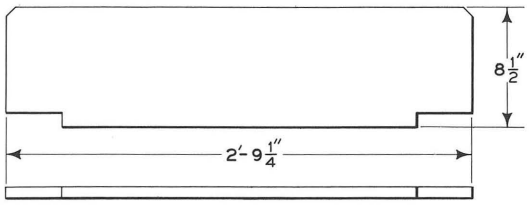

D-SHELF

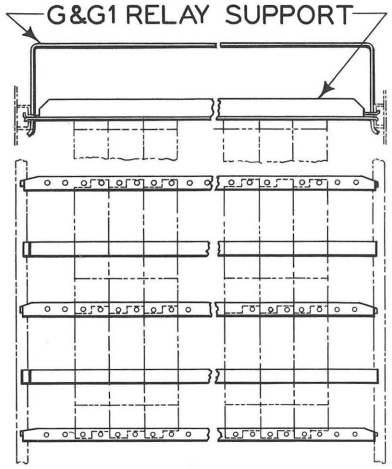

J-BRACKET-SINGLE

K-BRACKET-DOUBLE

Fixtures for base-of-mast instrument cases.

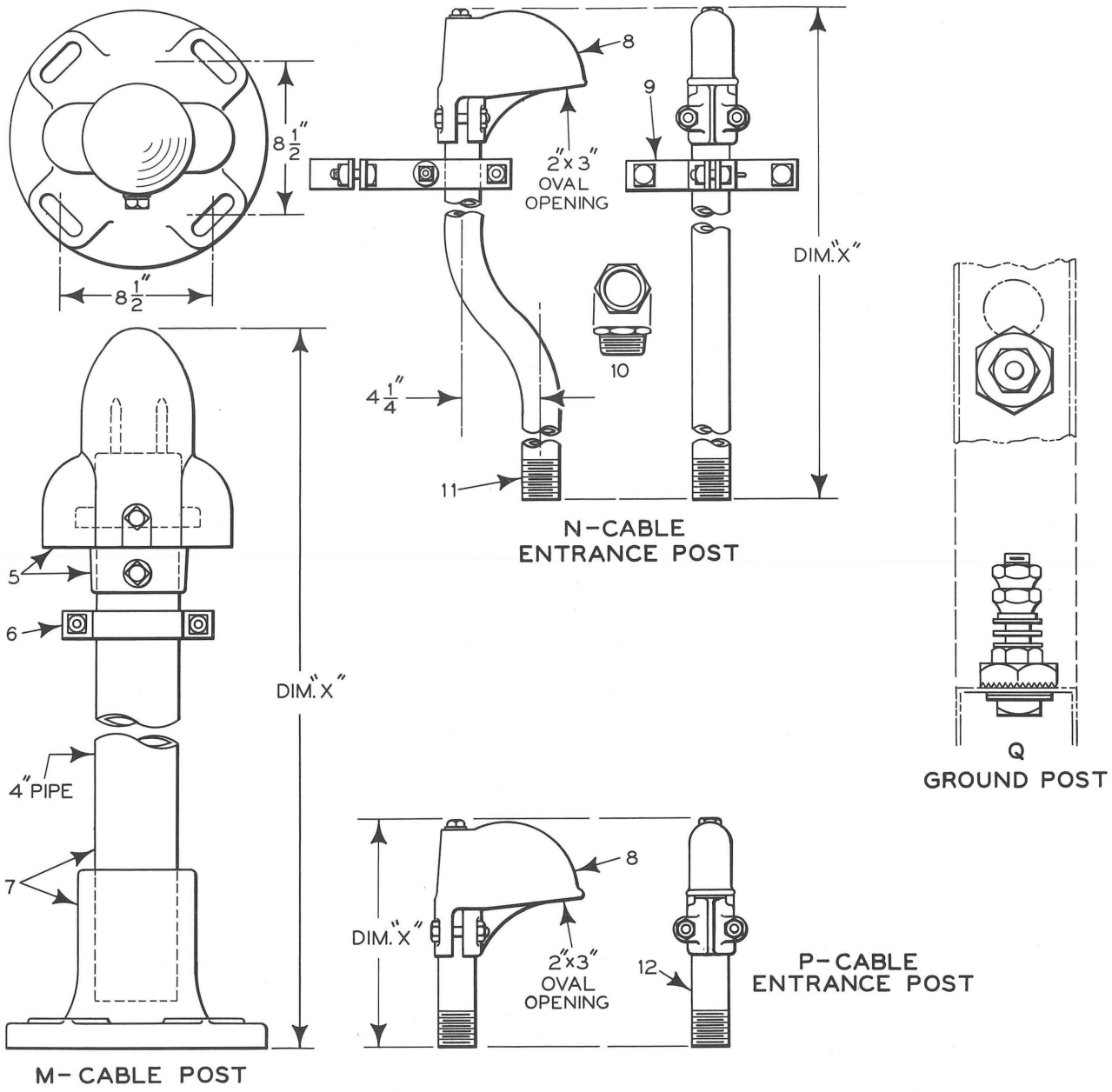

Fixtures for base-of-mast instrument cases.

Order by catalog number and name shown in bold type

REF.	NAME	CATALOG NUMBER
A	BATTERY TRAY, floor, wood, acid-resistant finish, with cleats unattached. For double-door cases	P5-340
B	BATTERY TRAY, floor, wood, acid-resistant finish, with cleats unattached. For single-door cases	P5-344
C	BATTERY OR RELAY SHELF, wood, acid-resistant finish, with cleats unattached. For all cases	P5-341

(Continued on following page)

FIXTURES FOR BASE-OF-MAST INSTRUMENT CASES

Order by catalog number and name shown in bold type

REF.	NAME	CATALOG NUMBER
D	SHELF, wood. For double-door cases	P5-345
E	FLOOR BOARD, two piece set, wood, acid-resistant finish. For double-door cases	P5-343
F	BATTERY COVER BOARD, wood, acid-resistant finish. For all cases	P5-342
G	RELAY SUPPORT, for first (or single row) of Type B relays, complete with wiring harness support	P5-355
G1	RELAY SUPPORT, for each additional row of Type B relays, complete with wiring harness support	P5-356
H	LIGHT SOCKET, pull chain type, includes screws for fastening to bracket	P5-168
J	BRACKET, single, for supporting shelves and trays, includes screw, nut, and washers	P5-323
K	BRACKET, double, for supporting shelves and trays, includes screw, nut, and washers	P5-359
M	CABLE POST complete, 4" dia., for high case. Dimension "X" = 3'-5"	A5-220
M1	CABLE POST complete, 4" dia., for low case. Dimension "X" = 5'-4"	A5-221
N	CABLE ENTRANCE POST complete, for low case, 2" curved conduit complete with reducing bushing and lock nut to fit in either pipe plugged hole in top of case. Includes clamp for securing conduit to 5" dia. signal mast. Dimension "X" = 3'-7-3/4".	A5-225
N1	As above, except for high case. Dimension "X" = 2'-2-1/4". . .	A5-226
P	CABLE ENTRANCE POST complete, for low case, 2" conduit complete with reducing bushing and lock nut to fit in either pipe plugged hole in top of case. Dimension "X" = 23-1/4".	A5-228
P1	As above, except for high case. Dimension "X" = 13-1/4". . . .	A5-229

FIXTURES FOR BASE-OF-MAST INSTRUMENT CASES

Order by catalog number and name shown in bold type

REF.	NAME	CATALOG NUMBER
Q	GROUND POST, 5/16" - 18 with hardened steel nut with serrated teeth which scrape paint from keyhole slot to ensure good ground connection	P5-162
5	PINNACLE, complete with cap and set screws, for 4" dia. mast, used as wire inlet	P5-370
6	CLAMP, complete with bolts, nuts and washers, for fastening messenger wire to 4" dia. mast	P5-372
7	POLE AND BASE of 4" dia. pipe for cable post Ref. M	P5-375
7A	As above, except for cable post Ref. M1	P5-376
8	COUPLING, complete, for posts Refs. N and P	P5-380
9	CLAMP, complete with bolts, nuts and washer, for securing conduit to 5" dia. signal mast	P5-383
10	BUSHING, reducing, 2-1/2" to 2", for conduit Ref. 11.	P5-385
11	CONDUIT, only, 2" dia. x 3'-2-1/2" long with 4-1/4" offset, for cable entrance post Ref. N	P5-387
11a	As above, except 21" long, for cable entrance post Ref. N1	P5-389
12	CONDUIT, only, 2" dia. x 18" long, for cable entrance post Ref. P.	P5-391
12a	As above, except 8" long, for cable entrance post Ref. P1.	P5-393

REPLACEMENT PARTS

Order by catalog number and name shown in bold type

NAME	CATALOG NUMBER
DOOR COMPLETE, front or back, for low case	P5-402
DOOR COMPLETE, front or back, for high case	P5-403
HINGE PIN, for doors	P5-307
FITTING, grease, for hinge pins	P5-308
SCREEN, for ventilator, for high-case	P5-312
SCREEN, for ventilator, for low case	P5-313
BAFFLE, reversible louver, for high case	P5-310
BAFFLE, reversible louver, for low case	P5-311

(Continued on following page)

REPLACEMENT PARTS

Order by catalog number and name shown in bold type

NAME	CATALOG NUMBER
ROD, latch, upper, for high case	P5-422
ROD, latch, lower, for high case	P5-423
ROD, latch, upper, for low case	P5-424
ROD, latch, lower, for low case	P5-425
COVER, metal, for top of case	P5-426
GASKET, 3/4" dia. rubber, for door, specify number feet.	P5-405
*CEMENT, for door gasket, one quart	P5-406
CLIP, supporting, for backboard in cases with front and rear doors	P5-320
CLIP, supporting, for backboard in cases with front door only	P5-418

* Commercial item:

Minnesota Mining & Mfg. Co's. 3M, EC-524 or equivalent.

CATALOG SECTION 5

Welded Steel Cases
Small Sizes - for Terminal Boards,etc.

CONTENTS

	Page
Low Terminal Board Case	52
High Terminal Board Case	52
Replacement Parts	53

GENERAL INFORMATION

Cases are constructed of heavy-gauge steel, which is strong, durable and corrosion resistant.

Front door only is furnished on all cases and is equipped with handle for padlocking. Door is replaceable and may be removed by lifting off hinge pins. It has weatherproof gaskets, thereby ensuring a tight seal between door and case. Screened ventilators are provided on doors.

Terminal board cases as shown on page 52 are available in two sizes, low or high. They are equipped with three wooden terminal boards and wooden floor boards.

TOOLS FOR TRANSPORTATION

GENERAL RAILWAY SIGNAL COMPANY

ROCHESTER, NEW YORK

Printed in U. S. A.

June 1960

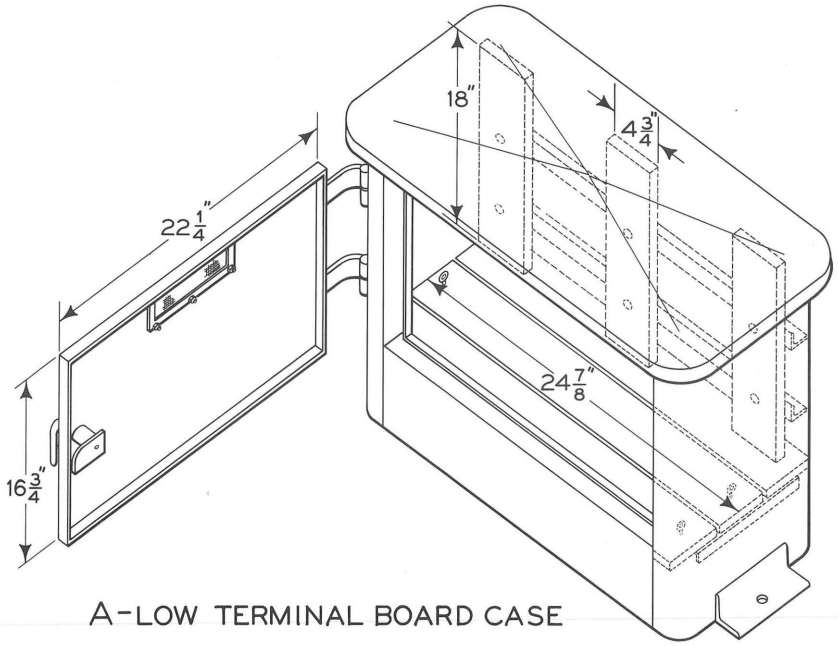

OUTSIDE CASE DIMENSIONS
HEIGHT - 2'-3 1/2"
WIDTH - 2'-4 1/4"
DEPTH - 12 1/4"

A-LOW TERMINAL BOARD CASE

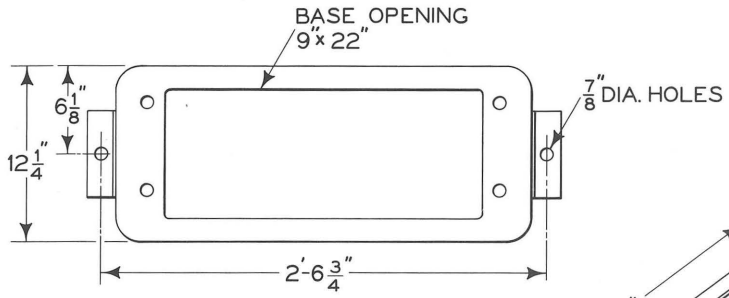

BASE PLAN SHOWING
MOUNTING HOLES

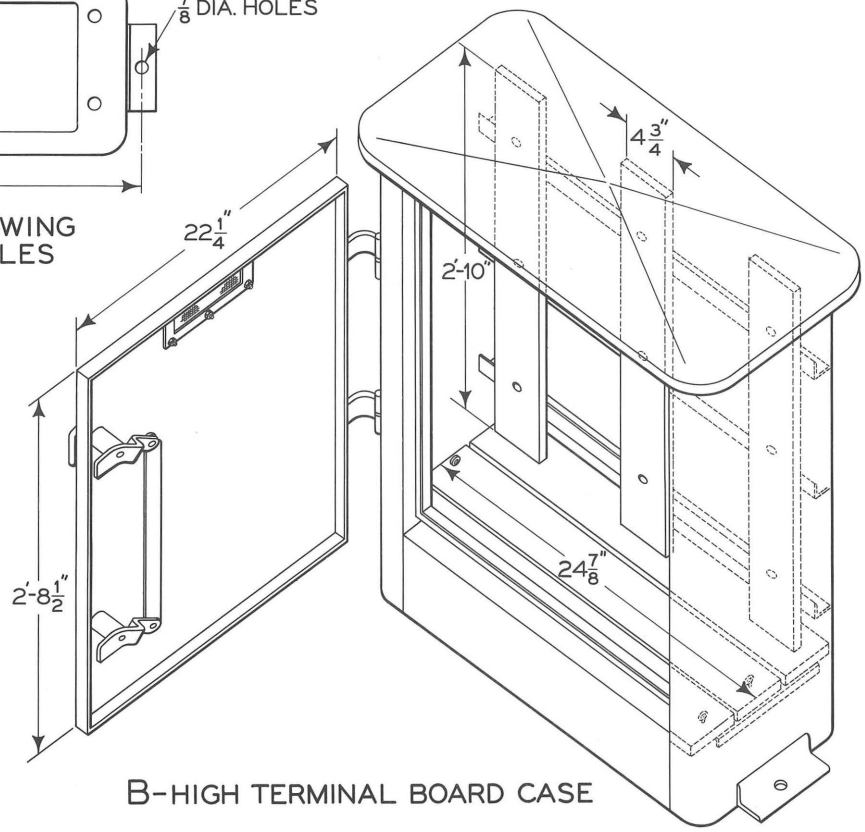

OUTSIDE CASE DIMENSIONS
HEIGHT - 3'-7 1/2"
WIDTH - 2'-4 1/4"
DEPTH - 12 1/4"

B-HIGH TERMINAL BOARD CASE

Welded steel terminal board cases.

WELDED STEEL TERMINAL BOARD CASES FRONT DOOR ONLY

Note: See general information on page 51.

Order by catalog number and name shown in bold type

REF.	NAME	CATALOG NUMBER
A	TERMINAL BOARD CASE, low, includes three terminal boards for mounting 48 AAR terminal blocks	A5-300
B	TERMINAL BOARD CASE, high, includes three terminal boards for mounting 90 AAR terminal blocks	A5-305

REPLACEMENT PARTS

Order by catalog number and name shown in bold type

NAME	CATALOG NUMBER
DOOR COMPLETE, for low case	P5-330
DOOR COMPLETE, for high case.	P5-331
GASKET, for door, specify number feet	P5-405
* CEMENT, for door gasket, one quart.	P5-406
HINGE PIN, for doors	P5-307
HOOD.	P5-407
SCREEN, for ventilator	P5-409
PLATE, for screen	P5-411
TERMINAL BOARD, 4 3/4" x 18" for low case.	P5-333
TERMINAL BOARD, 4 3/4" x 2' - 10" for high case	P5-334
FLOOR BOARD, consists of three pieces, with screw eyes, for low and high cases	P5-335

* Commercial item:

Minnesota Mining & Mfg. Co's. 3M, EC-524 or equivalent.

Memoranda

CATALOG SECTION 5

Modular Steel Instrument Housings with Adjustable Fixtures

CONTENTS

	Page
Housing 8' wide (6' to 20' long)	106
Housing, 6' x 6'	108
Typical Arrangements	110 to 115
Adjustable Fixtures	116 to 120
General Information	103
Repair Parts	121

GENERAL RAILWAY SIGNAL COMPANY

ROCHESTER, NEW YORK

Printed in U. S. A.

March 1960

71

Modular Steel Instrument Housings with Adjustable Fixtures

GENERAL INFORMATION

Housings are constructed of a heavy-gauge steel, which is strong, durable and corrosion resistant. Permanently installed keyhole channels inside the housings provide for a wide choice of arrangements of interior fittings. The modular shelving is attached to the inside of the housing by mounting brackets and shelf brackets, which are inserted into the keyhole channels. These brackets may be moved up or down in increments of 2". Mounting boards, shelves, and battery cover boards may be fastened to these brackets. Shelves may be used for batteries, relays, or any shelf mounted equipment. A wood acid-resistant battery tray is available for use on the floor of the housing.

The in-line rack is designed to be bolted to the roof trusses at the top and to the floor sections at the bottom. The uprights for this rack are formed of square keyhole channels, spaced on 23-inch centers and bolted in place. These keyholes are spaced on 2 3/16" centers. Between the keyhole channels, a variety of equipment may be supported. Terminal mounting boards can be mounted by the same supporting clip as used in GRS modular cases. Type B relays may be mounted on plugboards bolted to relay support bars. Cables from these plugboards may be hung on the cable support bars. Type A relay cabinets may be mounted between the uprights by use of hook supports, which engage in the keyhole channels at any height and may be moved up or down in increments of 2 3/16".

The housings are prime coated and painted gray inside and aluminum outside. All have heavy rubber floor covering.

Roof and side panels are replaceable. The side panels which carry the cable entrance couplings may be replaced without disconnecting cable or messenger. Underground cable entrance knockouts, seven inches in diameter, are provided as shown on pages 110 to 115 making several floor entrances available, depending upon the length of housing. Removable cover plates at each inside corner of the housing provide access to the foundation bolts. Cable entrance coupling mounting plates, with space for two couplings in each, are supplied on all four corners of the housing. Cable entrance couplings may be bolted on these plates at desired locations. A cable support for the messenger cable is available. A maintainer's call horn or a light may be mounted on the housing in place of a cable entrance coupling.

Each housing is furnished with suitable overhead lighting fixtures connected to a switch near the entrance, and one double appliance receptacle. A light is also furnished in each telephone booth, controlled by a plunger-type door switch so that the lamp is lighted only when the outside door is opened. Rubber grommets are supplied for protection of wiring which runs through holes in roof trusses. Two doors are recommended in all housings where full-length, in-line

racks are used. The additional door provides access to the back of the rack and terminal mounting board. When apparatus is mounted on the walls of the housing, only one door is necessary.

All doors have latches, provision for padlocking, and steel hooks for holding them open. Ventilating louvers on the door may be closed off by removing, inverting, and replacing the screen. A removable dust shield snaps into place directly behind the screen.

Round, waterproof, screened ventilators are provided at the peak of the roof. A sliding cover, operated from inside the housing, closes off the ventilator when desired.

Housings are equipped with a hoist bar under each roof ventilator.

Housings can be furnished either lined or unlined. The lining consists of 1/2" thick insulating board, painted gray.

Telephone booths can be supplied for 8-foot wide housings only. Each booth has an inner door which gives access to the remainder of the housing. This door can be padlocked.

For more information see GRS Development Sheet D68.0102.

Memoranda

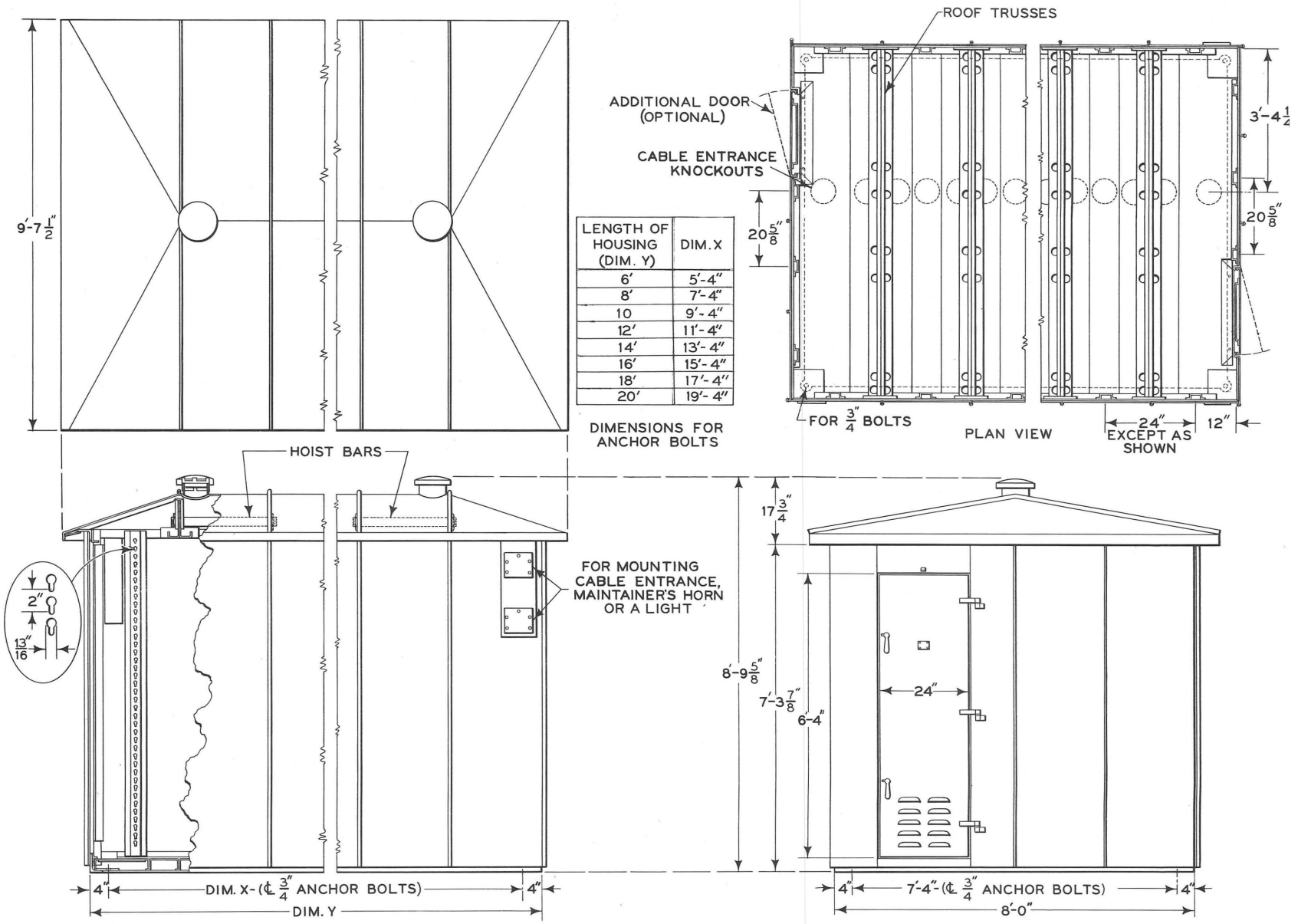

LENGTH OF HOUSING (DIM. Y)	DIM. X
6'	5'-4"
8'	7'-4"
10	9'-4"
12'	11'-4"
14'	13'-4"
16'	15'-4"
18'	17'-4"
20'	19'-4"

DIMENSIONS FOR ANCHOR BOLTS

Modular steel instrument housing.
8 ft. wide (6 ft. to 20 ft. long)

MODULAR STEEL INSTRUMENT HOUSINGS
8ft. wide (6ft. to 20ft. long)

See general information on pages 103 and 104.
Housings are furnished without fixtures. See typical arrangements shown on pages 110 to 113. (To order fixtures, see pages 116 to 120):
Housings are equipped with the following:
1 - Rubber floor covering.
2 - Ventilators in roof.
3 - Lighting layout with overhead fixtures, switch, and double appliance receptacle.

When ordering, specify "Instrument Housing" and give catalog number.

WIDTH OF HOUSING	LENGTH OF HOUSING	NUMBER OF DOORS	UNLINED HOUSINGS CATALOG NUMBER		LINED HOUSINGS CATALOG NUMBER	
			With Telephone Booth	Without Telephone Booth	With Telephone Booth	Without Telephone Booth
8'	6'	1	A5-500	A5-501	A5-502	A5-503
8'	6'	2	A5-505	A5-506	A5-507	A5-508
8'	8'	1	A5-510	A5-511	A5-512	A5-513
8'	8'	2	A5-515	A5-516	A5-517	A5-518
8'	10'	1	A5-520	A5-521	A5-522	A5-523
8'	10'	2	A5-525	A5-526	A5-527	A5-528
8'	12'	1	A5-530	A5-531	A5-532	A5-533
8'	12'	2	A5-535	A5-536	A5-537	A5-538
8'	14'	1	A5-540	A5-541	A5-542	A5-543
8'	14'	2	A5-545	A5-546	A5-547	A5-548
8'	16'	1	A5-550	A5-551	A5-552	A5-553
8'	16'	2	A5-555	A5-556	A5-557	A5-558
8'	18'	1	A5-560	A5-561	A5-562	A5-563
8'	18'	2	A5-565	A5-566	A5-567	A5-568
8'	20'	1	A5-570	A5-571	A5-572	A5-573
8'	20'	2	A5-575	A5-576	A5-577	A5-578

NOTE: If it is desired to have housings shipped with shelving and fixtures (unmounted) inside each housing in which they are to be used, please so state on order. For example:

2 Instrument Housings A5-516, each to include:
1 - In-line rack P5-563
1 - Relay support P5-573
8 - Relay supports P5-576
8 - Supports (Type A relay cabinets) . . . P5-591
1 - Battery tray P5-531
1 - Cover board P5-521
4 - Mounting boards P5-541
1 - Cable entrance coupling P5-611
1 - Terminal mounting board P5-570

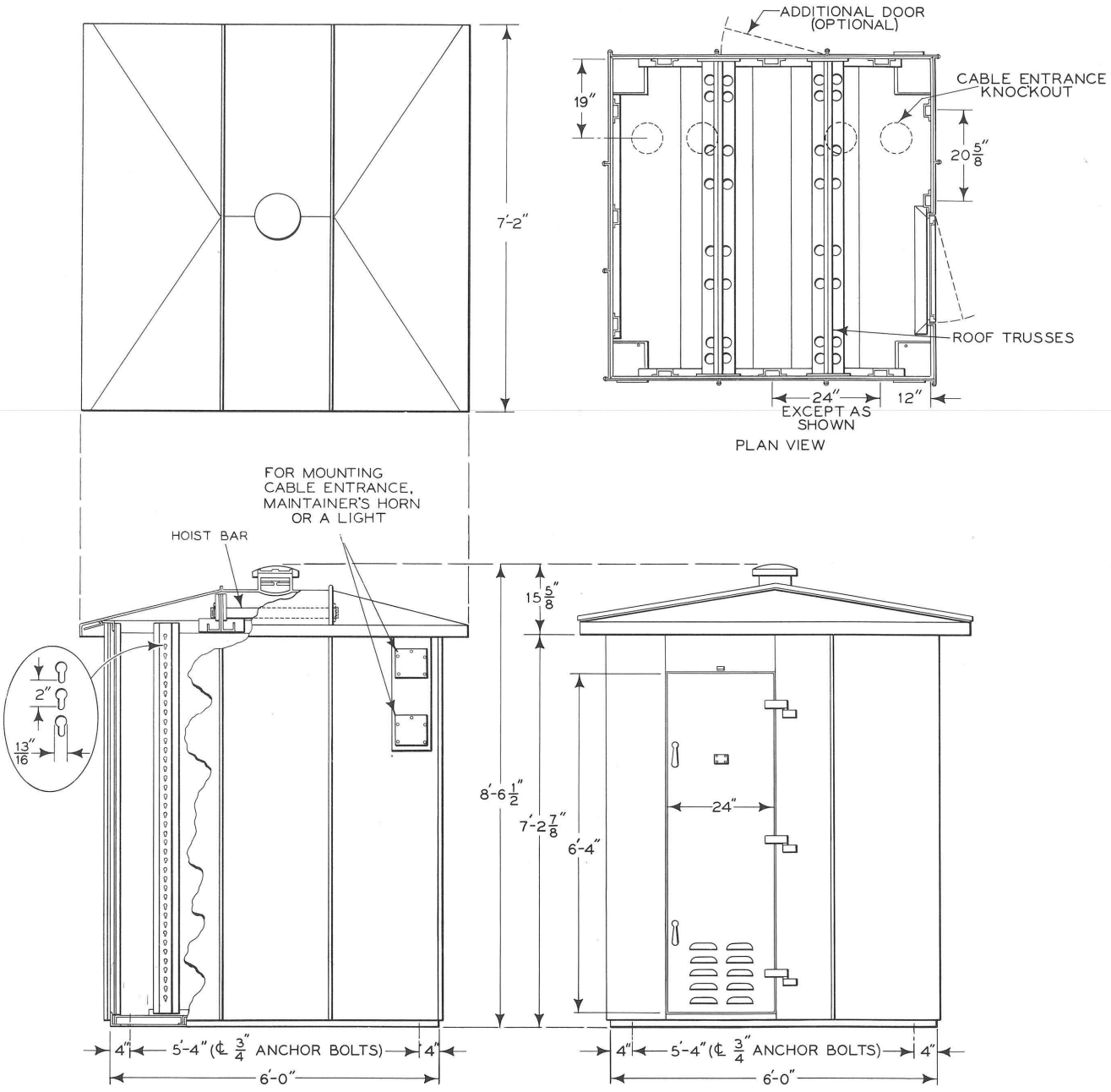

Modular steel instrument housing.
6 ft. x 6 ft.

MODULAR STEEL INSTRUMENT HOUSINGS
6ft. x 6ft.

See general information on pages 103 and 104.
Housings are furnished without fixtures. See typical arrangements shown on pages 114 and 115. (To order fixtures, see pages 116 to 120):

Housings are equipped with the following:

1 - Rubber floor covering.
2 - Ventilator in roof.
3 - Lighting layout with overhead fixtures, switch and double appliance receptacle.

When ordering, specify "Instrument Housing" and give catalog number.

WIDTH OF HOUSING	LENGTH OF HOUSING	NUMBER OF DOORS	UNLINED HOUSINGS CATALOG NUMBER	LINED HOUSINGS CATALOG NUMBER
6'	6'	1	A5-590	A5-591
6'	6'	2	A5-593	A5-594

NOTE: If it is desired to have housings shipped with shelving and fixtures (unmounted) inside each housing in which they are to be used, please so state on order. For example:

2 Instrument Housings A5-593, each to include:

1 - In-line rack P5-562
1 - Relay support P5-573
8 - Relay supports P5-576
8 - Supports (Type A relay cabinets) . . . P5-591
1 - Battery tray P5-530
1 - Cover board P5-520
4 - Mounting boards P5-540
1 - Cable entrance coupling P5-611
1 - Terminal mounting board P5-570

TYPICAL ARRANGEMENTS

NOTE: The sketches shown on these pages illustrate only a few of the many possible arrangements of mountings for relays, mounting boards, shelves, battery trays, and covers.

The vertical spacing of the shelves, trays, etc. may be varied in steps of 2".

See pages 116 to 120 for ordering references for fixtures.

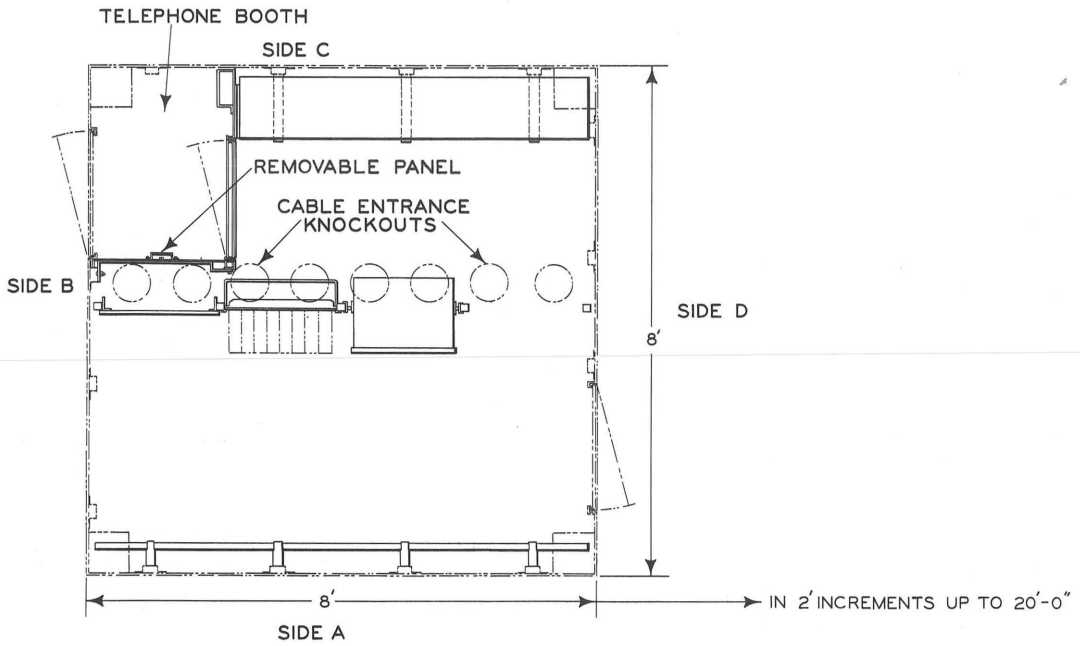

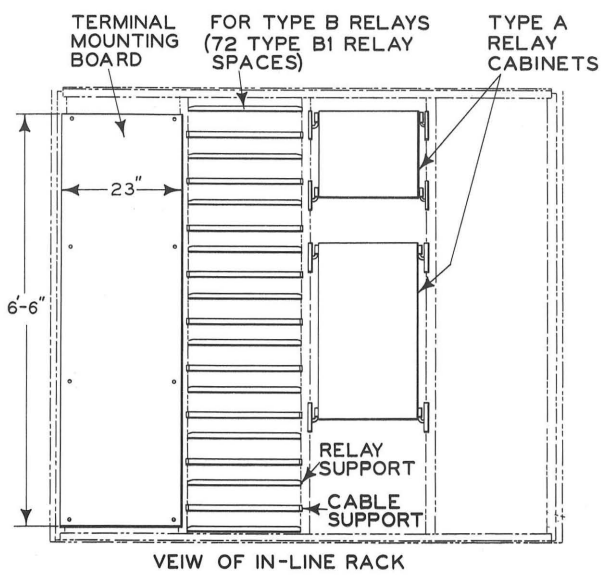

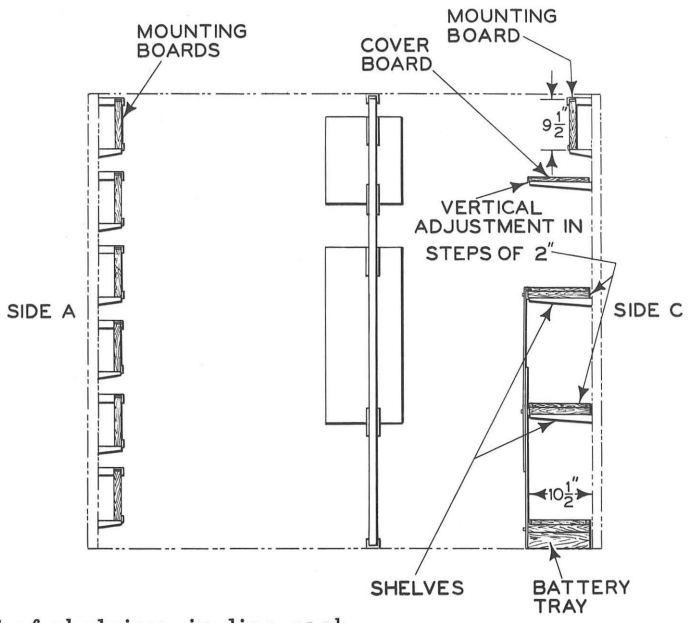

Typical arrangement of shelving, in-line rack for Type B relays, and shelving, for 8' x 8' instrument housing.

TYPICAL ARRANGEMENT

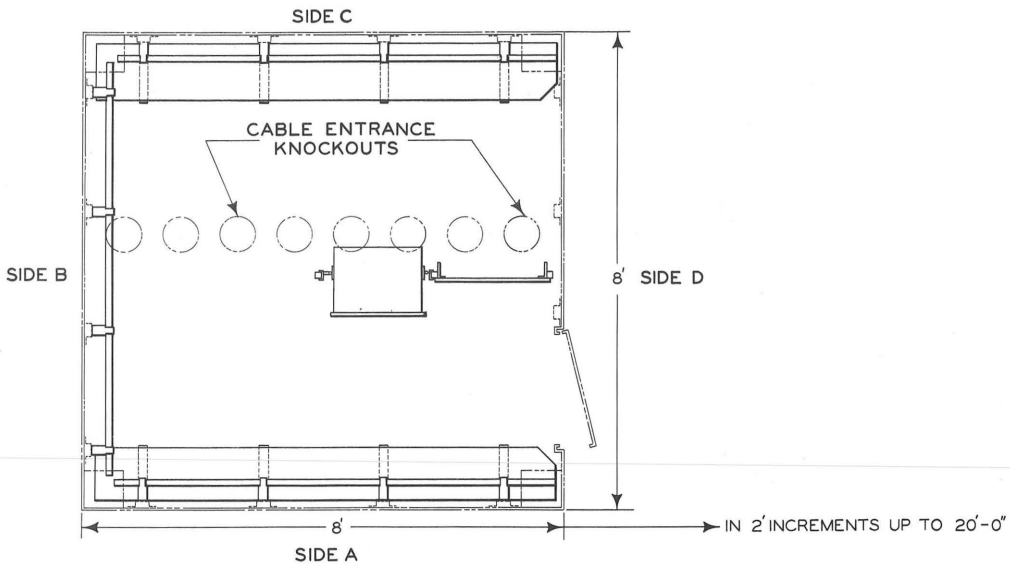

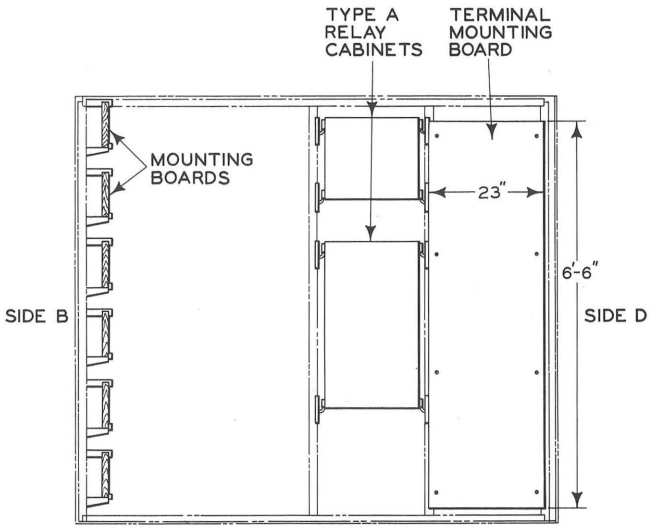

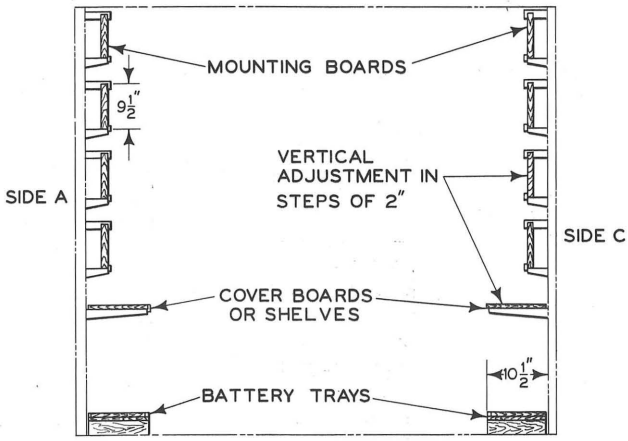

Typical arrangement of shelving and battery trays for 8' x 8' instrument housing.

TYPICAL ARRANGEMENT

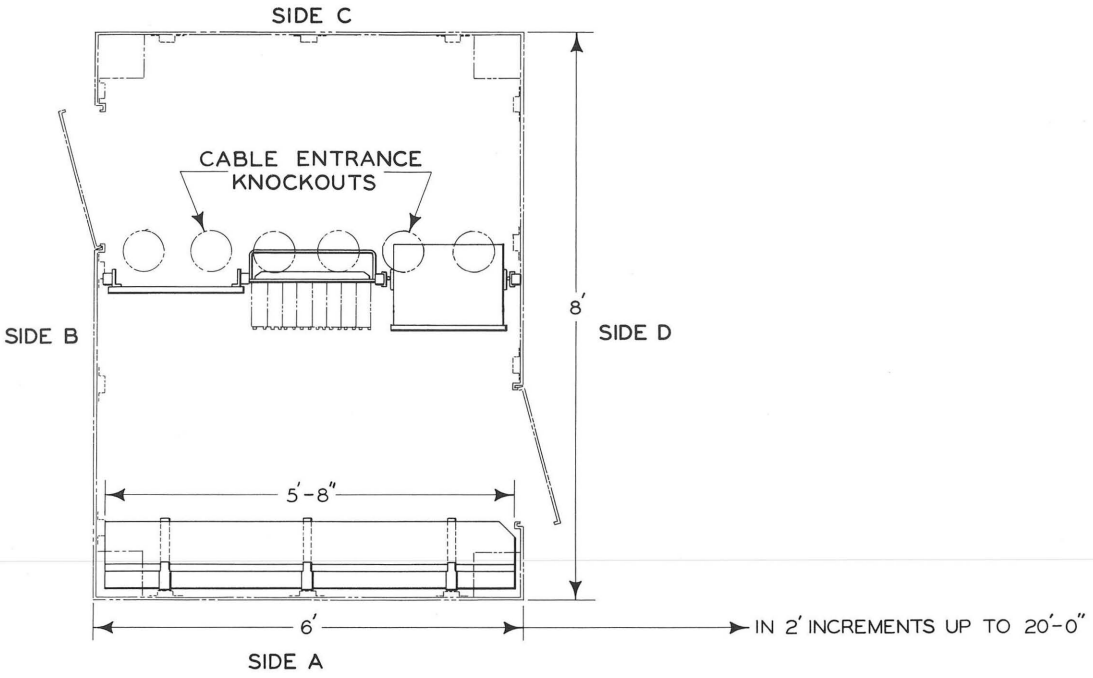

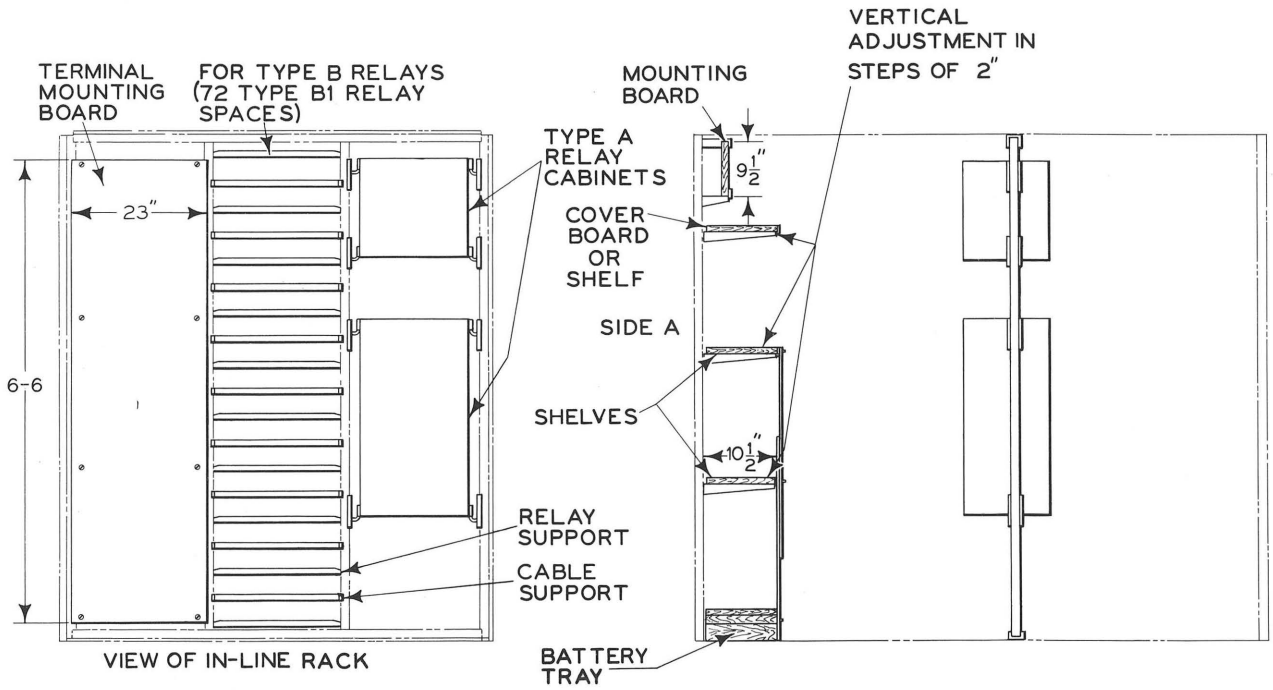

Typical arrangement of shelving, in-line rack
for Type B relays, and battery tray, for 8' x 6' instrument housing.

TYPICAL ARRANGEMENT

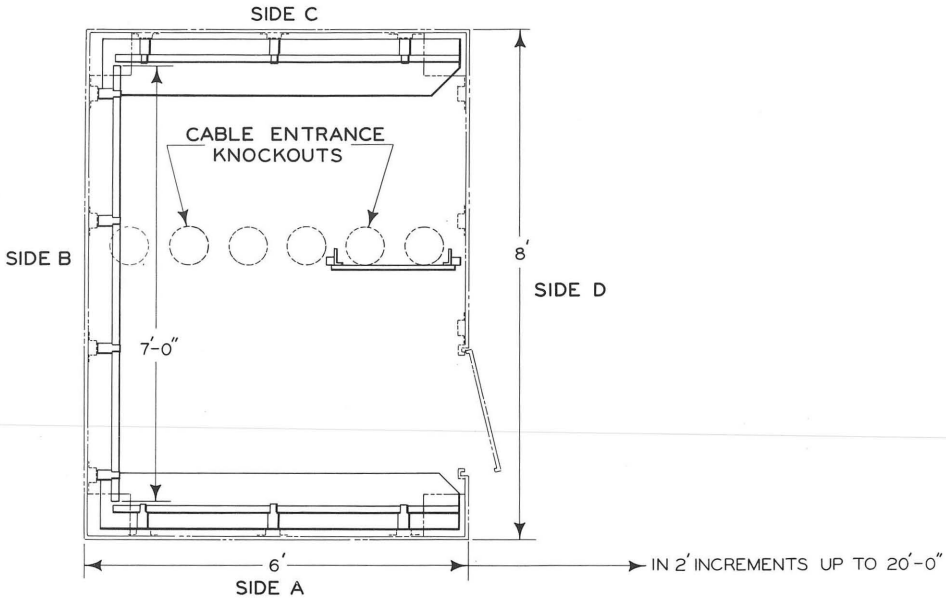

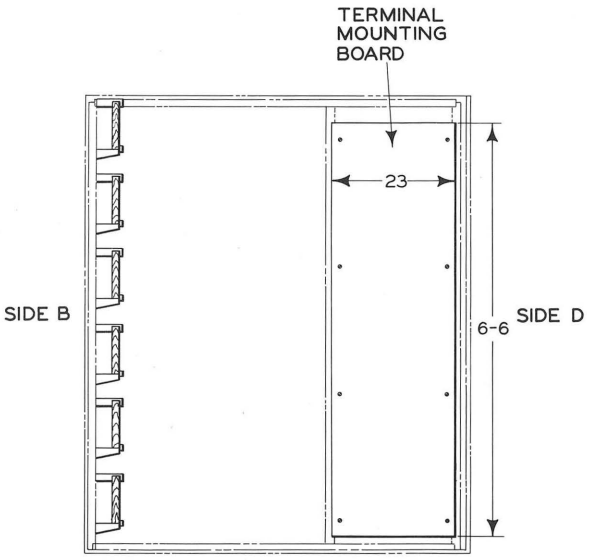

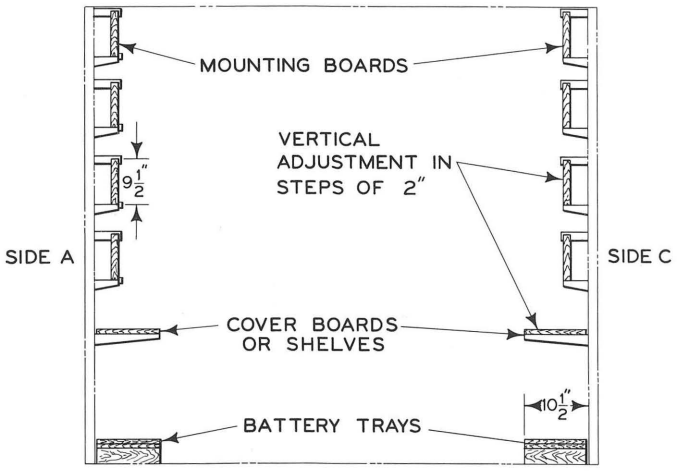

Typical arrangement of shelving and battery trays for 8' x 6' instrument housing.

TYPICAL ARRANGEMENT

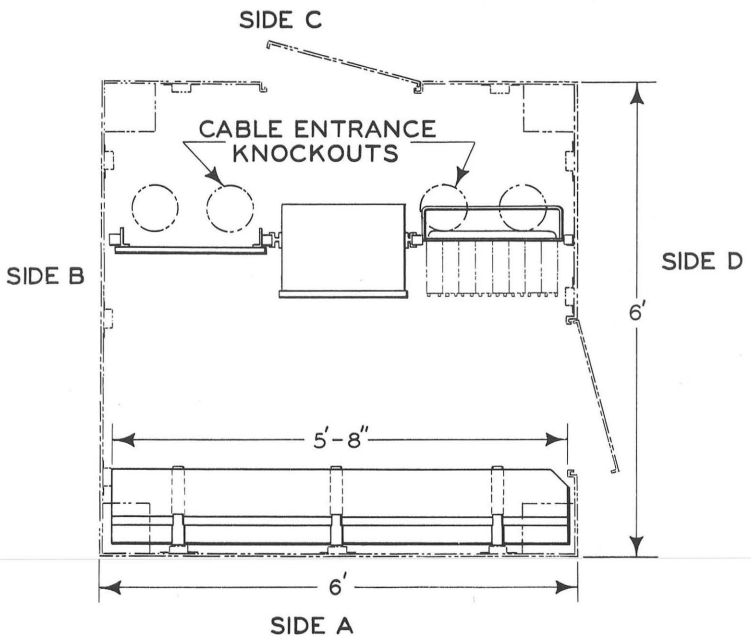

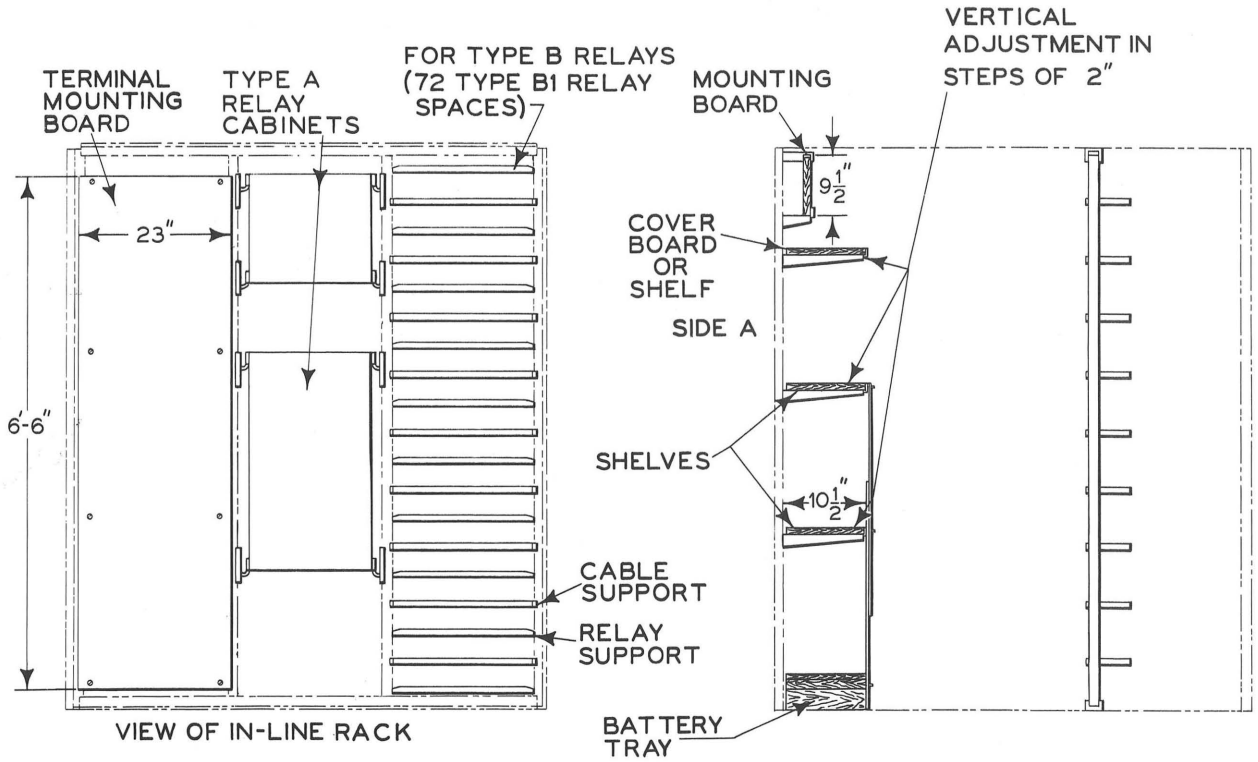

Typical arrangement of shelving, in-line rack for Type B relays, and battery tray, for 6' x 6' instrument housing.

TYPICAL ARRANGEMENT

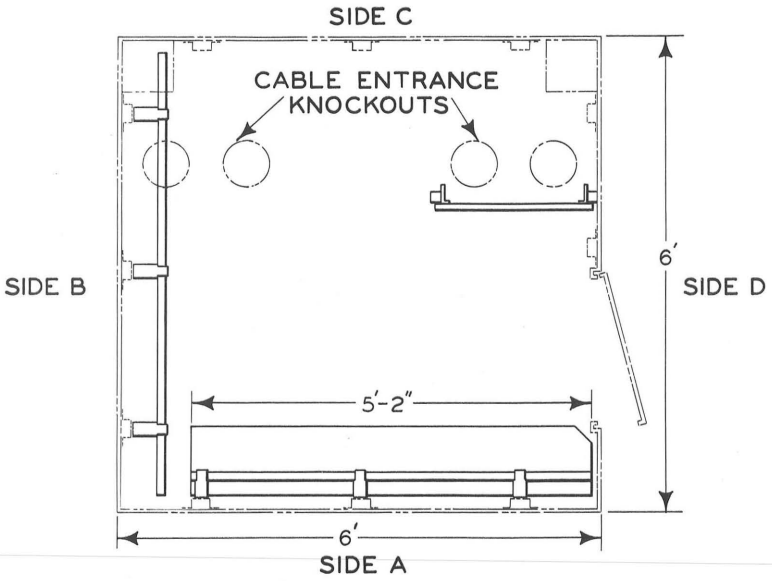

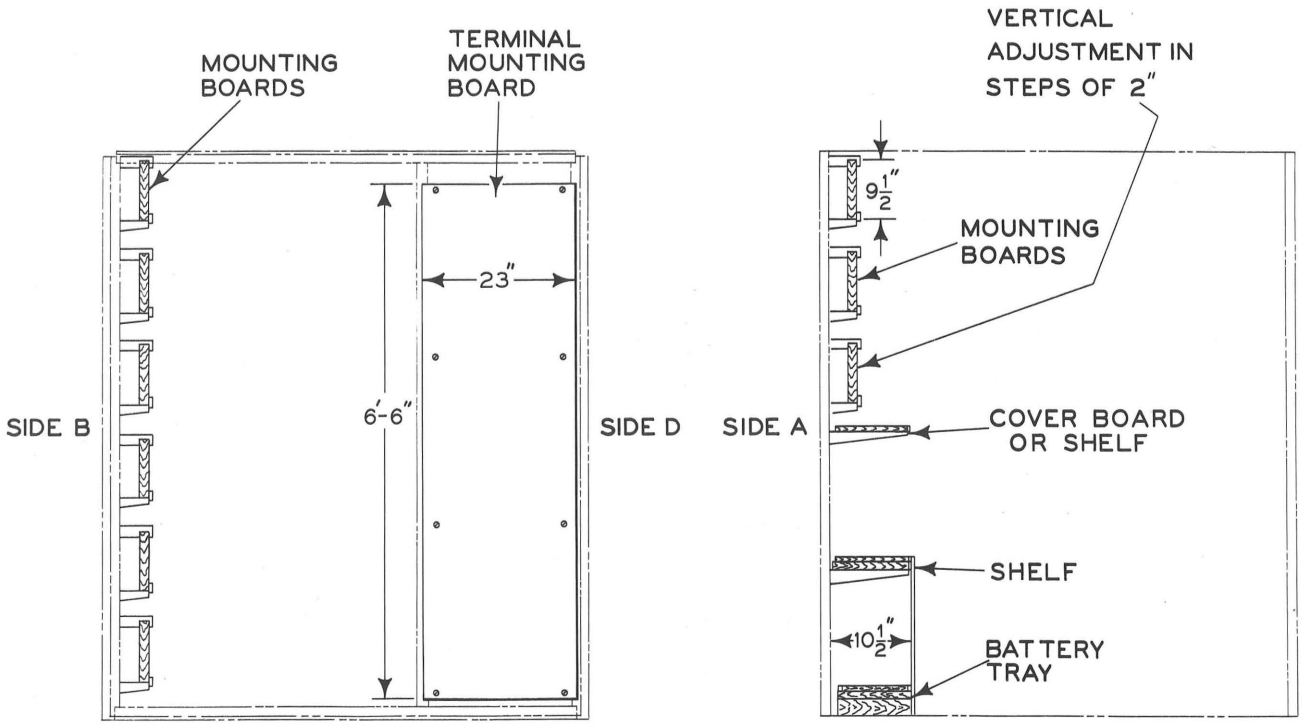

Typical arrangements of shelving and battery tray for 6' x 6' instrument housing.

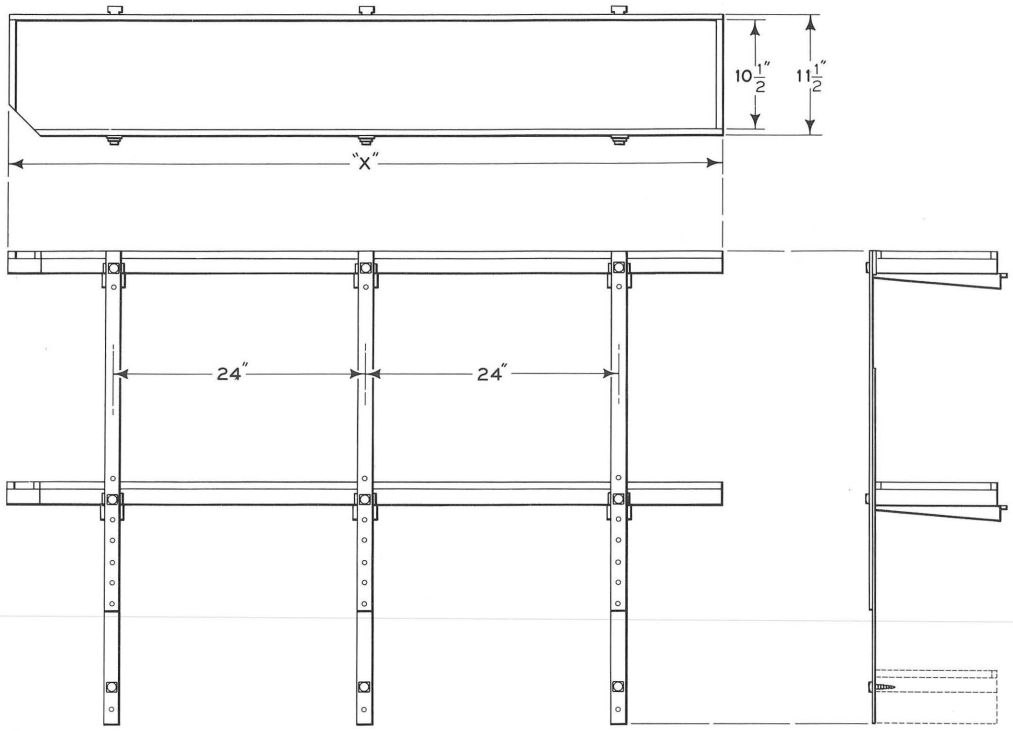

A-SHELVES, WOOD, FOR BATTERIES, RELAYS, ETC.

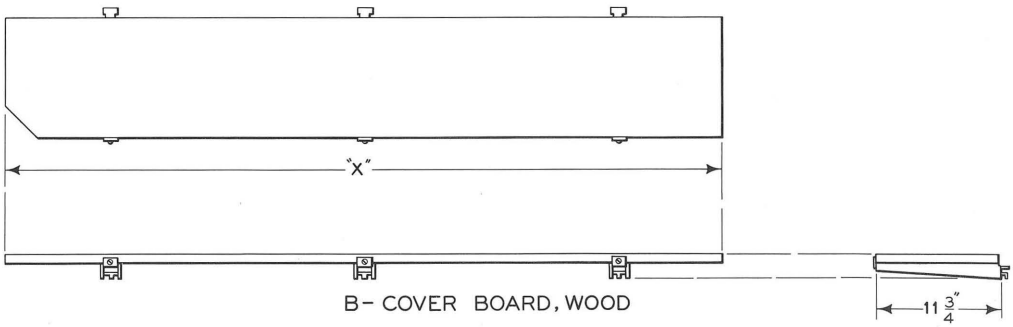

B- COVER BOARD, WOOD

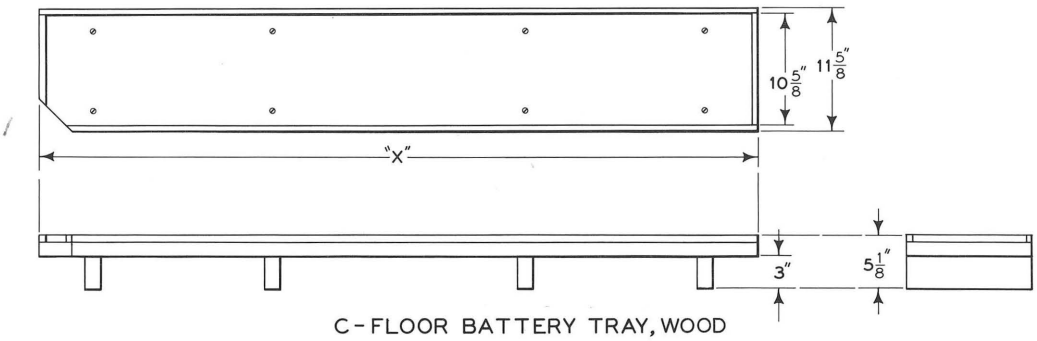

C-FLOOR BATTERY TRAY, WOOD

Fixtures for modular steel instrument housings.

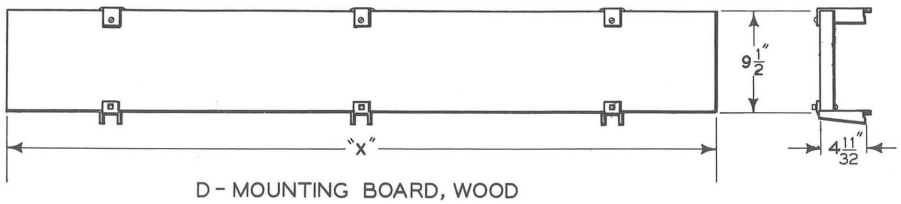

D - MOUNTING BOARD, WOOD

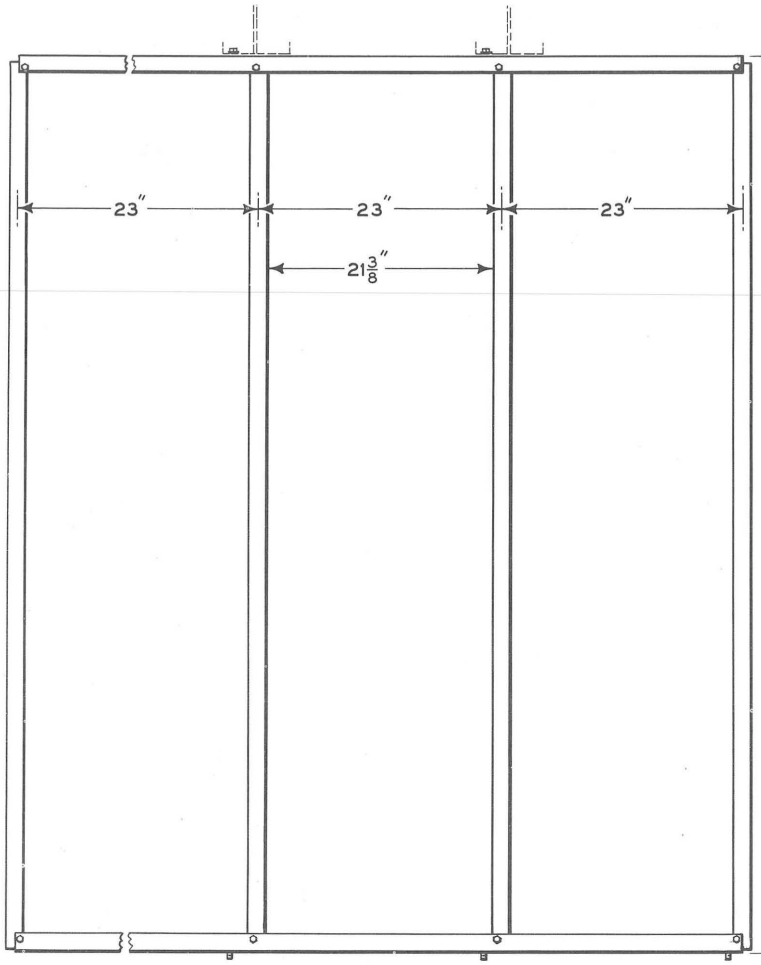

E - IN-LINE RACK

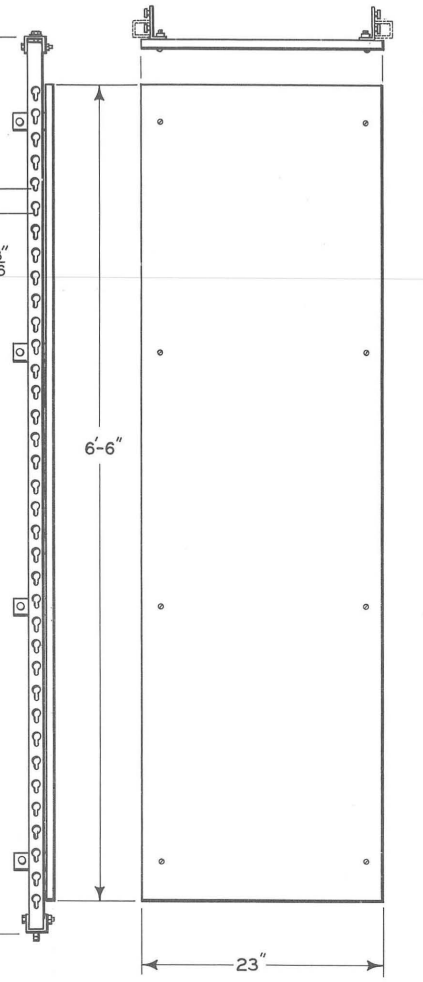

F - TERMINAL BOARD WOOD

	LENGTH OF HOUSING							
	6'	8'	10'	12'	14'	16'	18'	20'
* DIMENSION "X"	5'-8"	7'-8"	9'-8"	11'-4"	13'-4"	15'-4"	17'-4"	19'-4"
MAX. NUMBER OF 23" BAYS, IN-LINE RACK	3	4	5	6	7	8	9	9

* DIMENSION "X" = LENGTH OF BOARDS, SHELVES AND TRAY, MAY BE SHORTENED IN FIELD

Fixtures for modular steel instrument housings.

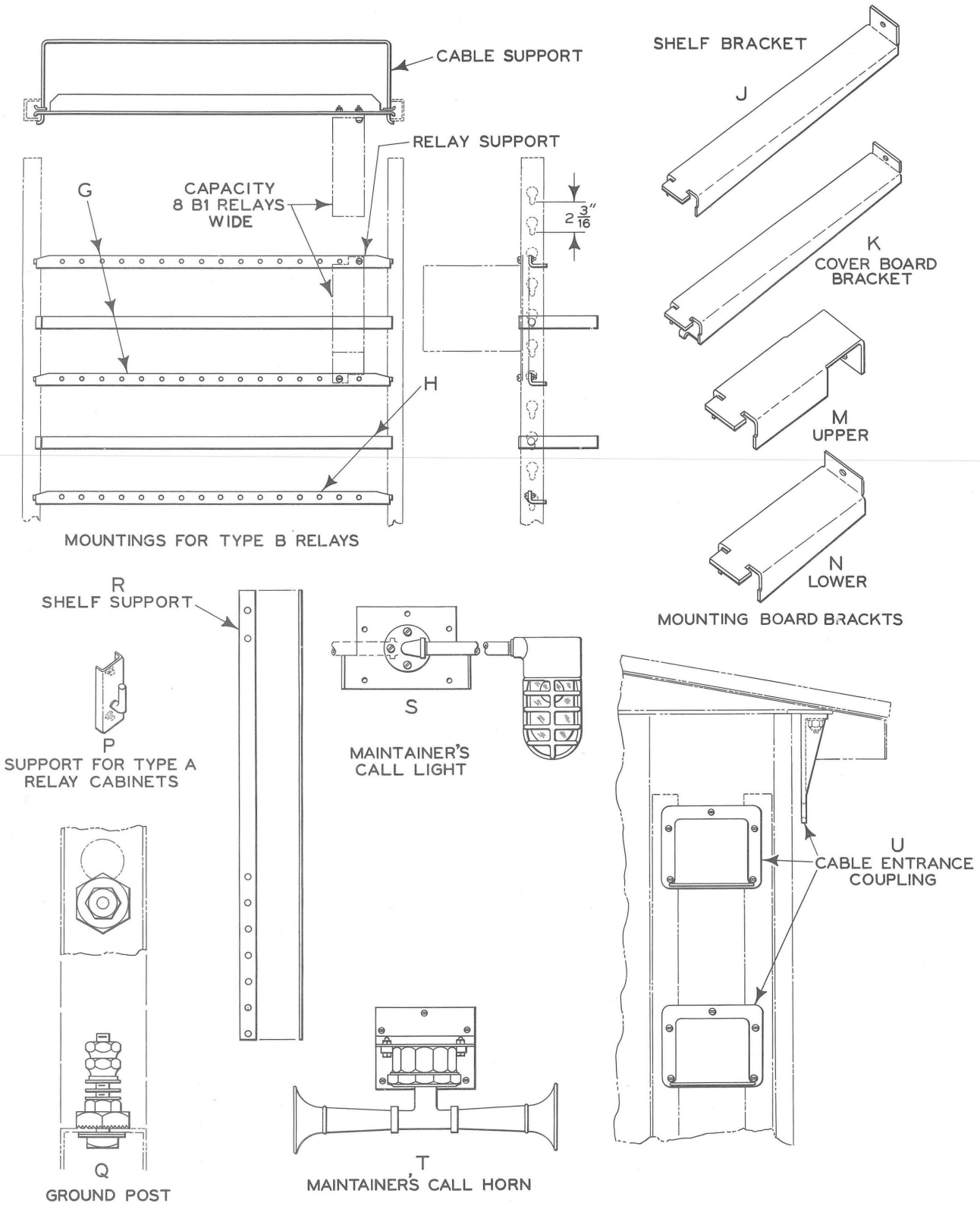

Fixtures for modular steel instrument housings.

FIXTURES FOR MODULAR STEEL HOUSINGS
All Include Mounting Hardware

Order by catalog number and name shown in bold type

REF.	NAME	CATALOG NUMBER			
		For 6' long Housing	For 8' long Housing	For 10' long Housing	For 12' long Housing
A	SHELF, Set of two, UPPER and LOWER	P5-500	P5-501	P5-502	P5-503
A1	SHELF, SINGLE	P5-510	P5-511	P5-512	P5-513
B	COVER BOARD	P5-520	P5-521	P5-522	P5-523
C	FLOOR BATTERY TRAY	P5-530	P5-531	P5-532	P5-533
D	MOUNTING BOARD	P5-540	P5-541	P5-542	P5-543

REF.	NAME	CATALOG NUMBER			
		For 14' long Housing	For 16' long Housing	For 18' long Housing	For 20' long Housing
A	SHELF, Set of two, UPPER and LOWER	P5-504	P5-505	P5-506	P5-507
A1	SHELF, SINGLE	P5-514	P5-515	P5-516	P5-517
B	COVER BOARD	P5-524	P5-525	P5-526	P5-527
C	FLOOR BATTERY TRAY	P5-534	P5-535	P5-536	P5-537
D	MOUNTING BOARD	P5-544	P5-545	P5-546	P5-547

REF.	NAME	CATALOG NUMBER
E	IN-LINE RACK, 1 bay long, for any length housing, when full length rack is not required	P5-560
E1	IN-LINE RACK, 2 bays long, any length housing when full length rack is not required	P5-561
E2	IN-LINE RACK, 3 bays long, for 6 ft. housing	P5-562
E3	" " " 4 " " " 8 ft. "	P5-563
E4	" " " 5 " " " 10 ft. "	P5-564
E5	" " " 6 " " " 12 ft. "	P5-565

(Continued on following page)

FIXTURES FOR MODULAR STEEL HOUSINGS
All Include Mounting Hardware

Order by catalog number and name shown in bold type

REF.	NAME	CATALOG NUMBER
E6	IN-LINE RACK, 7 bays long, for 14 ft. housing	P5-566
E7	" " " 8 " " " 16 ft. "	P5-567
E8	" " " 9 " " " 18 or 20 ft. housing	P5-568
F	TERMINAL MOUNTING BOARD, for in-line rack, includes mounting clips	P5-570
G	RELAY SUPPORT, for first (or single row) of Type B relays, complete with wiring harness support	P5-573
H	RELAY SUPPORT, for each additional row of Type B relays, complete with wiring harness support	P5-576
J	BRACKET, for supporting shelf, Ref. A	P5-579
K	BRACKET, for supporting cover board, Ref. B	P5-582
M	BRACKET, upper, for mounting board, Ref. D	P5-585
N	BRACKET, lower, for supporting mounting board, Ref. D	P5-588
P	SUPPORT, for Type A relay cabinet, four required per cabinet	P5-591
Q	GROUND POST, 5/16"-18 with hardened steel nut with serrated teeth which scrape paint from hole to ensure good ground connection	P5-162
R	SUPPORT, for battery shelf Ref. A	P5-593
S	MAINTAINER'S CALL LIGHT, right- or left- hand, with socket for medium screw base lamp and adapter for candelabra single contact bayonet base lamp	P5-596
T	MAINTAINER'S CALL HORN, 110 volt, d-c	P5-602
T1	as above, except 110 volt, a-c	P5-605
U	CABLE ENTRANCE COUPLING, includes two couplings and cable support	P5-608
U1	as above, except includes one coupling and cable support	P5-611

MODULAR STEEL INSTRUMENT HOUSINGS REPAIR PARTS

Order by catalog number and name shown in bold type

NAME	CATALOG NUMBER
DOOR COMPLETE, right hand	P5-700
DOOR COMPLETE, left hand (side door for 6' x 6' housing)	P5-701
HINGE PIN, for door, three required	P5-307
GASKET, 3/4" dia., 16' -9" long, for door. Specify number feet	P5-405
*CEMENT, for door gasket, one quart	P5-406
SCREEN, for ventilator in door	P5-703
DUST SHIELD, for ventilator in door.	P5-704
SCREEN, for roof ventilator	P5-705
VENTILATOR, cap for roof ventilator	P5-706
CLIP, for terminal mounting board	P5-320
CABLE ENTRANCE COUPLING	P5-708
CABLE SUPPORT.	P5-709
ROOF BATTEN, for 6' wide housing	P5-710
ROOF BATTEN, for 8' wide housing	P5-711
SIDE BATTEN, for all housings	P5-712
ROOF PANEL, end section, for 6' wide housing.	P5-713
ROOF PANEL, center section, with hole for ventilator, for 6' wide housing	P5-714
ROOF PANEL, end section, for 8' wide housing.	P5-715
ROOF PANEL, center section, plain, for 8' wide housing.	P5-716
ROOF PANEL, center section, with hole for ventilator, for 8' x 6' housing only.	P5-717
ROOF PANEL, center section, with hole for ventilator, for 8' x 8' and longer housings	P5-718
The following side panels are used on all housings	
SIDE PANEL, 4'-1 3/16" wide, with right hand door	P5-719
SIDE PANEL, 24" wide, with 2 flanges and slot for cable entrance coupling	P5-720

(Continued on following page)

* Commercial item:
Minnesota Mining & Mfg. Co's. 3M, EC-524 or equivalent

MODULAR STEEL INSTRUMENT HOUSINGS REPAIR PARTS

Order by catalog number and name shown in bold type

NAME	CATALOG NUMBER
SIDE PANEL, 2'-1 3/16" wide, with one flange and slot for cable entrance coupling	P5-721
SIDE PANEL, 24" wide, plain	P5-722
SIDE PANEL, 2'-1 3/16" wide, with one flange	P5-723
The following side panels are used on 6' x 6' housings only.	
SIDE PANEL, 4' wide, with left hand door	P5-724
SIDE PANEL, 13 3/4" wide, with one flange and slot for cable entrance coupling	P5-725
SIDE PANEL, 12" wide, with two flanges and slot for cable entrance coupling	P5-726
RIVET, tubular	P5-727

CATALOG SECTION 10

Cable Posts

GENERAL RAILWAY SIGNAL COMPANY
ROCHESTER, NEW YORK
Printed in U. S. A.

June 1960

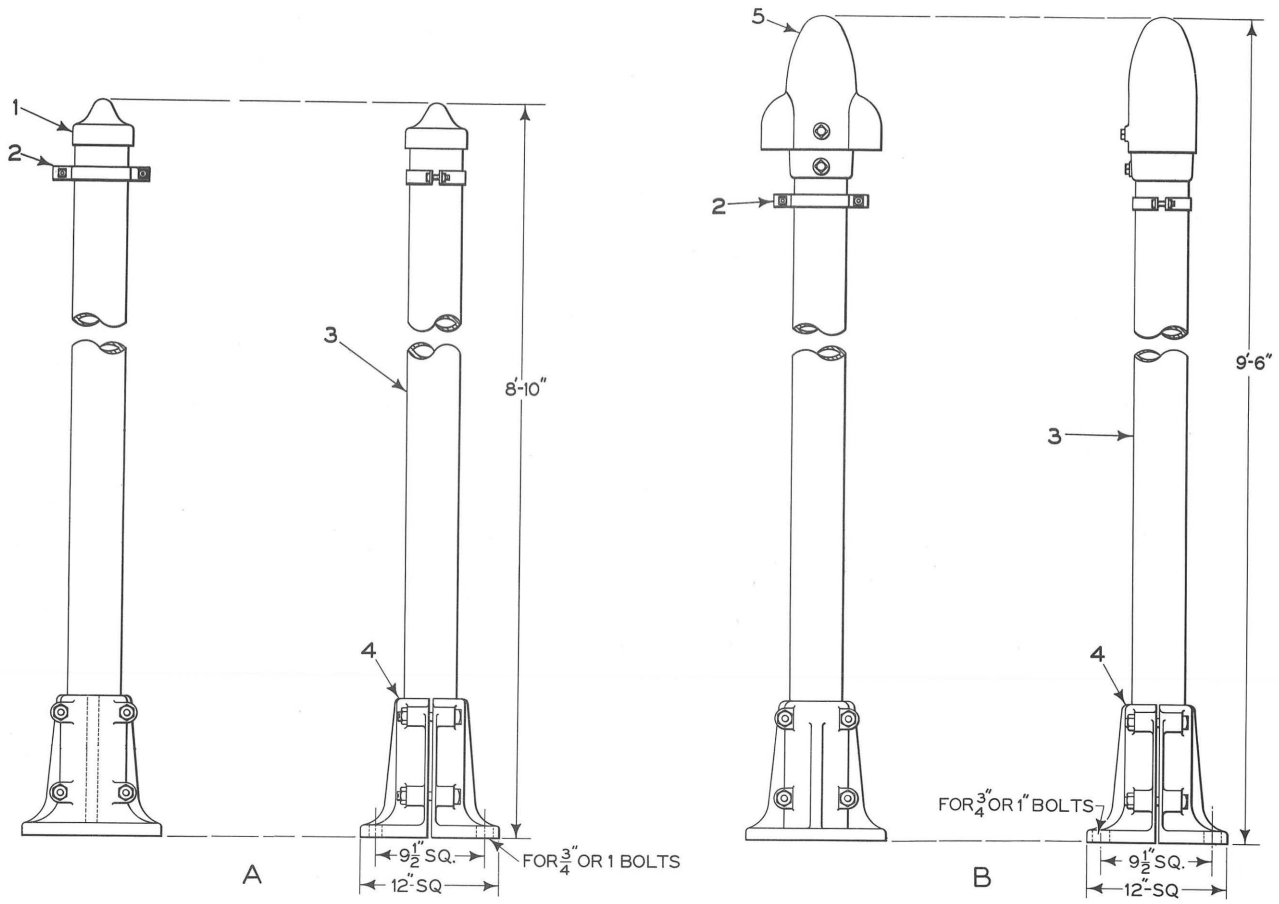

CABLE POSTS

Note - For shorter cable posts, for mounting on cases, see Catalog Section 5.

Order by catalog number and name shown in bold type

REF.	NAME	CATALOG NUMBER
A	CABLE POST COMPLETE, 4" dia., with split base, 8' - 10" overall	A10-100
B	CABLE POST COMPLETE, 4" dia., with split base, 9' - 6" overall	A10-105
1	PINNACLE, for 4" dia. mast	A30-245
2	CLAMP, complete, with bolts, nuts and washers, for fastening messenger wire to 4" dia. mast.	P5-372
3	PIPE, 4" dia., 8' - 7 1/2" long	P10-100
4	BASE COMPLETE, includes bolts and nuts for attaching to 4" dia. mast	P10-105
5	PINNACLE, complete with cap and set screws, for 4" dia. mast, used as wire inlet	P5-370

CATALOG SECTION 18

Coded Track and Trakode® Equipment

CONTENTS

	Page
Capacitors	6
Code Detecting Unit	4
Decoder Units	5
Master Decoding Transformers	3
Reactors	8 & 11
Rectifier	10
Resistors	10
Suppressors	10

GENERAL RAILWAY SIGNAL COMPANY

ROCHESTER, NEW YORK

Printed in U. S. A.

March 1960

Coded Track and Trakode® Equipment

GENERAL INFORMATION

The equipment shown is used exclusively with coded track and Trakode.® For other resistors, terminal blocks, etc., see Catalog Section 3.

For relays and code transmitters used with coded track and Trakode, see Catalog Sections 62 and 65.

For more details, see the following GRS Development Sheets:

CODED TRACK

Coded Track Circuit Control	-	D21.3103
Test Equipment	-	D21.3002
Code Analyzer	-	D21.3003

TRAKODE®

For APB and cTc	-	D21.3105
Nomenclature and Functions	-	Pamphlet 821

MASTER DECODING TRANSFORMERS - FOR RATE CODE

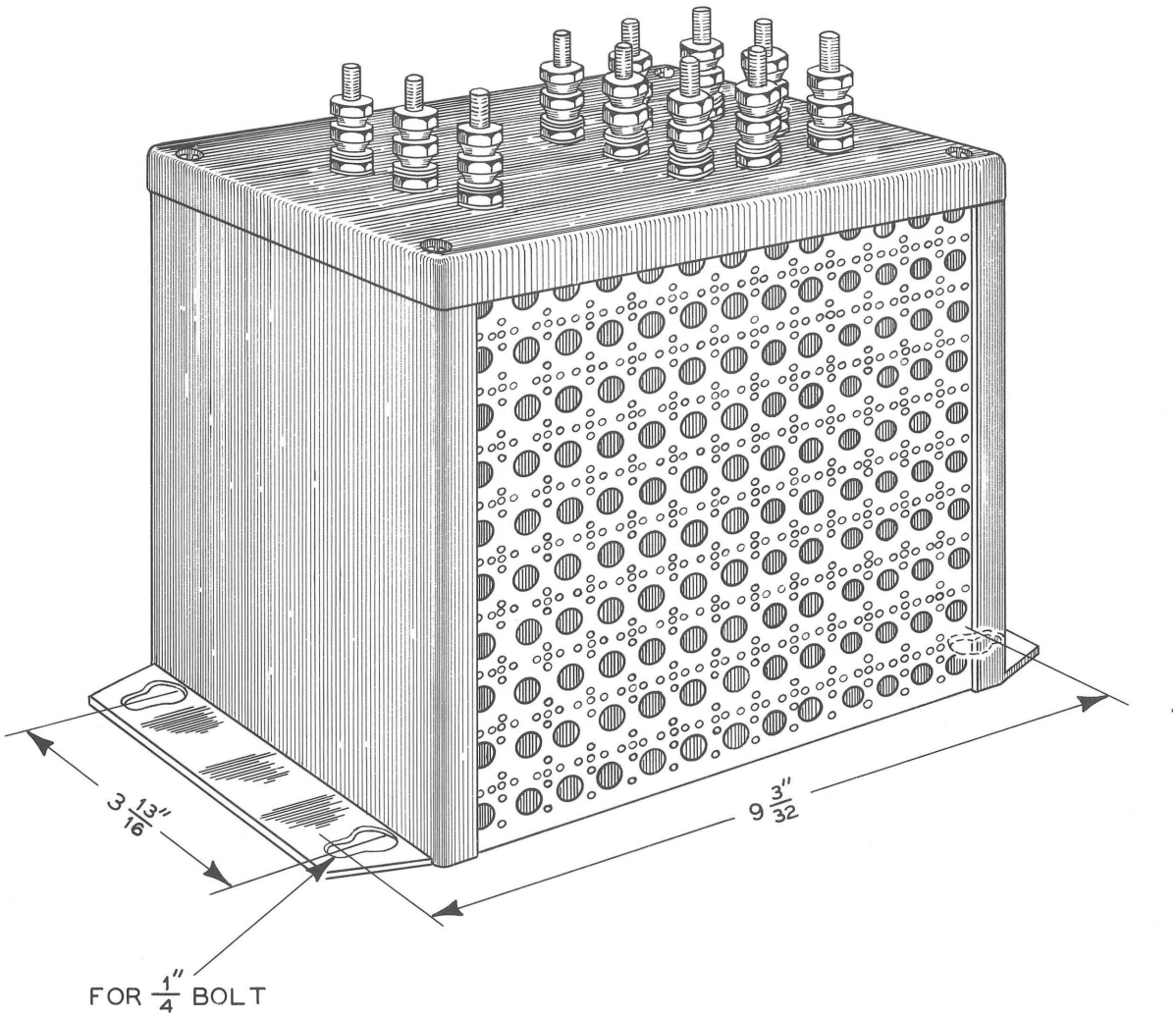

A

LENGTH — 9 13/16"
HEIGHT — 8 1/8"
WIDTH — 5 3/8"

To order, specify "Master Transformer" and give catalog number

For suppressor units, see page 10.

REF.	NAME	CATALOG NUMBER
A	MASTER DECODING TRANSFORMER, with 10 volt d-c primary and two secondaries, one for operating decoders and one for operating code-detecting relay	A18-100
A1	TRANSFORMER, for inverse decoding, with 10-volt d-c primary and one secondary	A18-103

CODE-DETECTING UNIT - FOR TRAKODE®

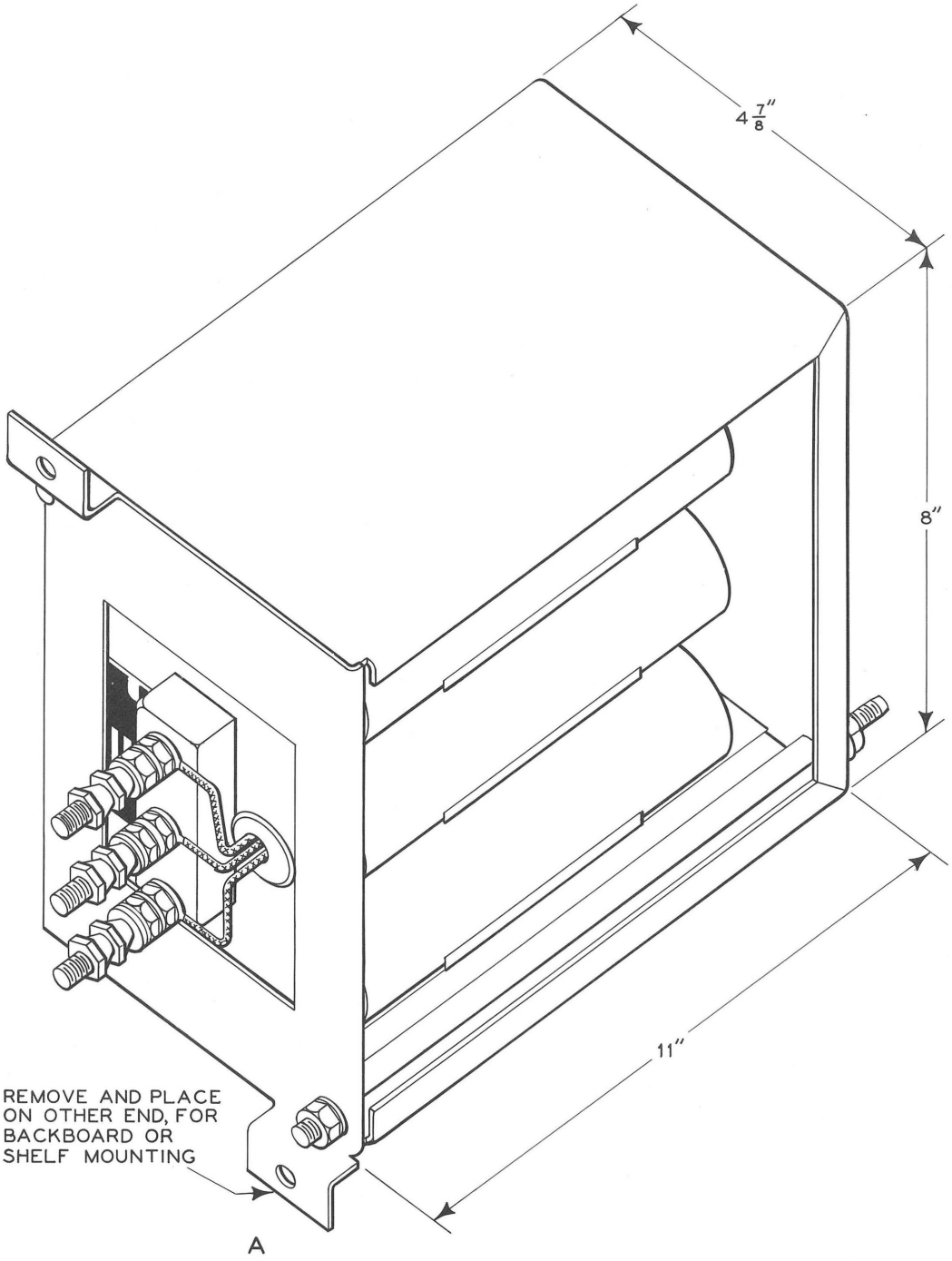

To order, specify "Code-Detecting Unit" and give catalog number

REF.	NAME	CATALOG NUMBER
A	CODE DETECTING UNIT, for mounting on shelf, backboard, or in a B2 relay space	A18-110

DECODER UNITS
75, 120 and 180 Rate

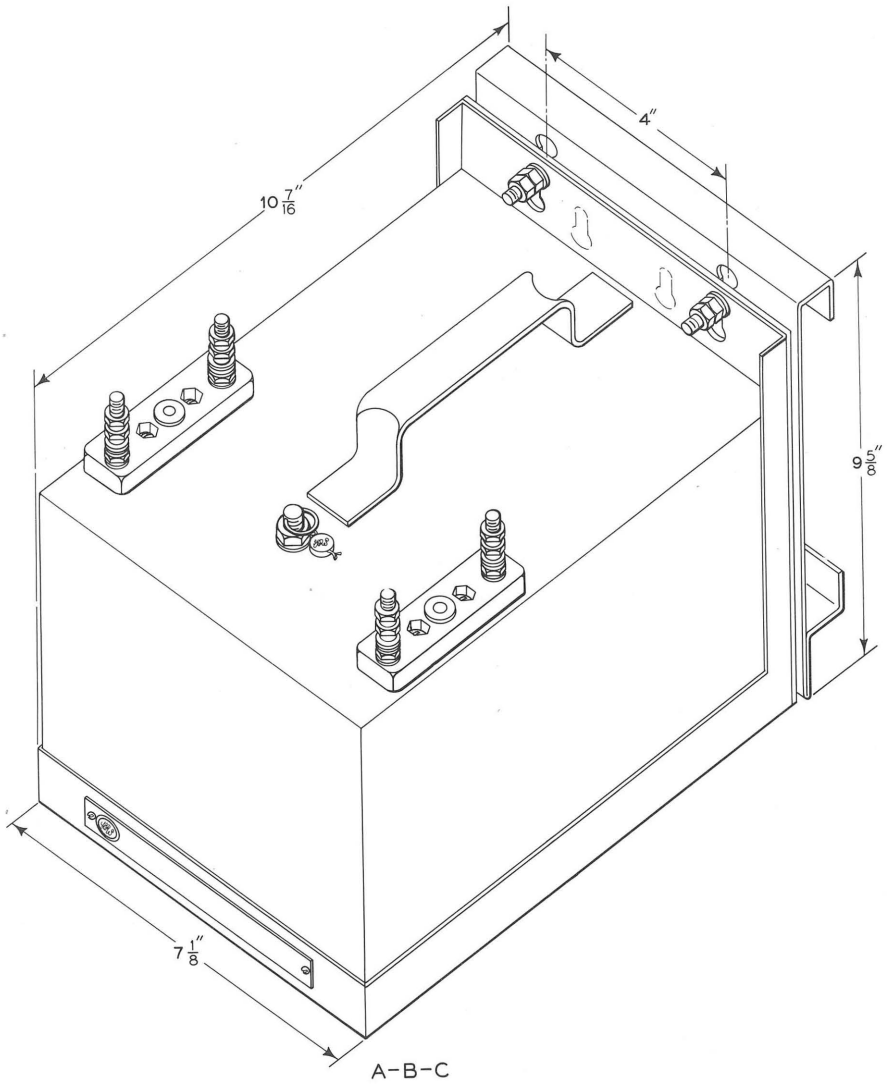

Each decoder is furnished with a wall-mounting plate, which is registered to accept only a decoder of the proper rate.

To order, specify "Decoder Unit" and give catalog number

REF.	NAME	CATALOG NUMBER
A	DECODER UNIT, 75 rate	A18-115
B	As above, except 120 rate	A18-118
C	As above, except 180 rate	A18-121

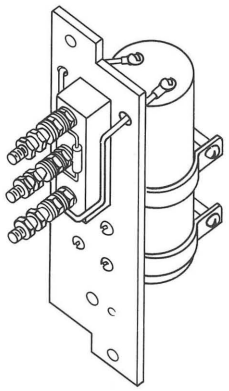

A

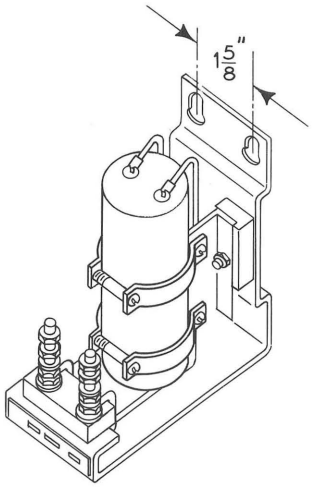

B

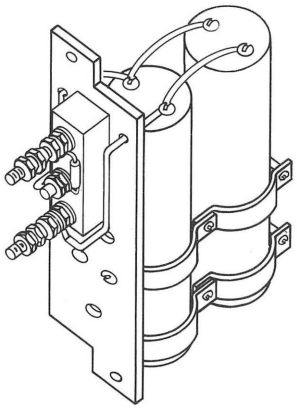

C

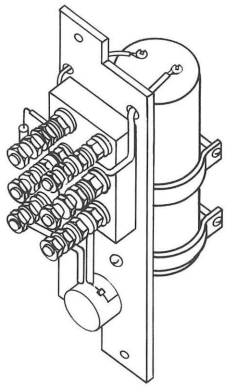

D

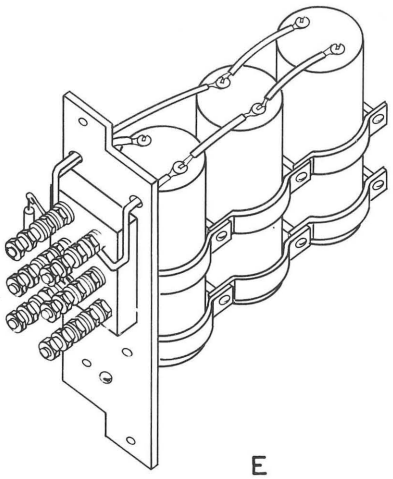

E

Capacitor units.

CAPACITOR UNITS

To order, specify "Capacitor" and give catalog number

REF.	NAME	CATALOG NUMBER
A	CAPACITOR UNIT, 1000 mfd., 30 volts d-c, with 18 ohm resistor. For mounting in B1 relay space	A18-130
B	As above, except for wall or shelf mounting	A18-133
C	CAPACITOR UNIT, 2000 mfd., 30 volts, d-c, with 18 ohm resistor, for mounting in B1 relay space	A18-140
D	CAPACITOR UNIT, 1000 mfd., 30 volts d-c, with 18 ohm resistor, 270 ohm fixed resistor also 3000 ohm variable resistor, for mounting in B1 relay space	A18-145
E	CAPACITOR UNIT, 2000 mfd., + 1000 mfd., 30 volts d-c, with 18 ohm resistor, for mounting in B1 relay space	A18-150

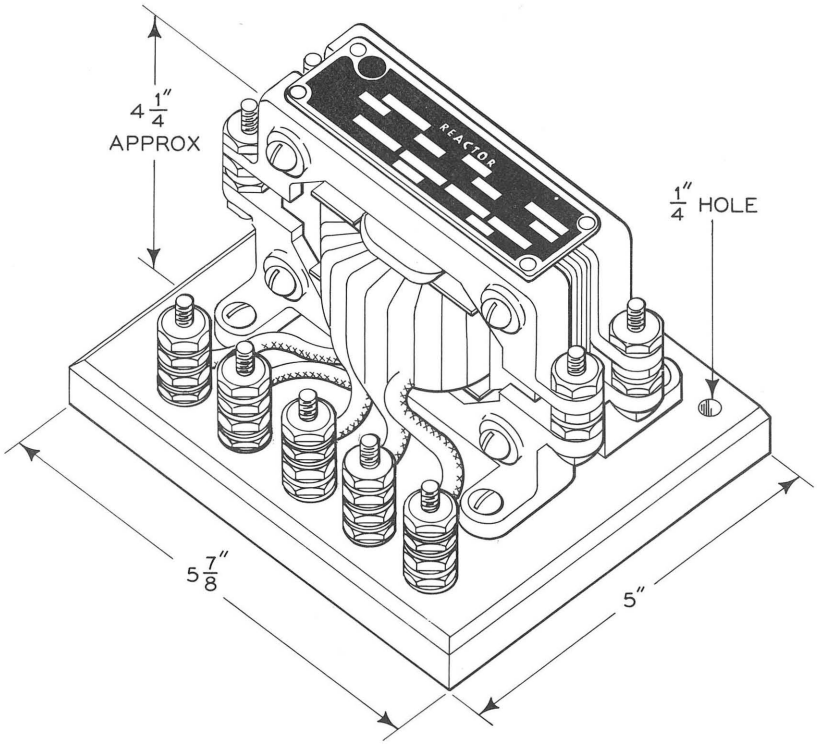
4 1/4" APPROX
1/4" HOLE
5 7/8"
5"
REACTOR

A

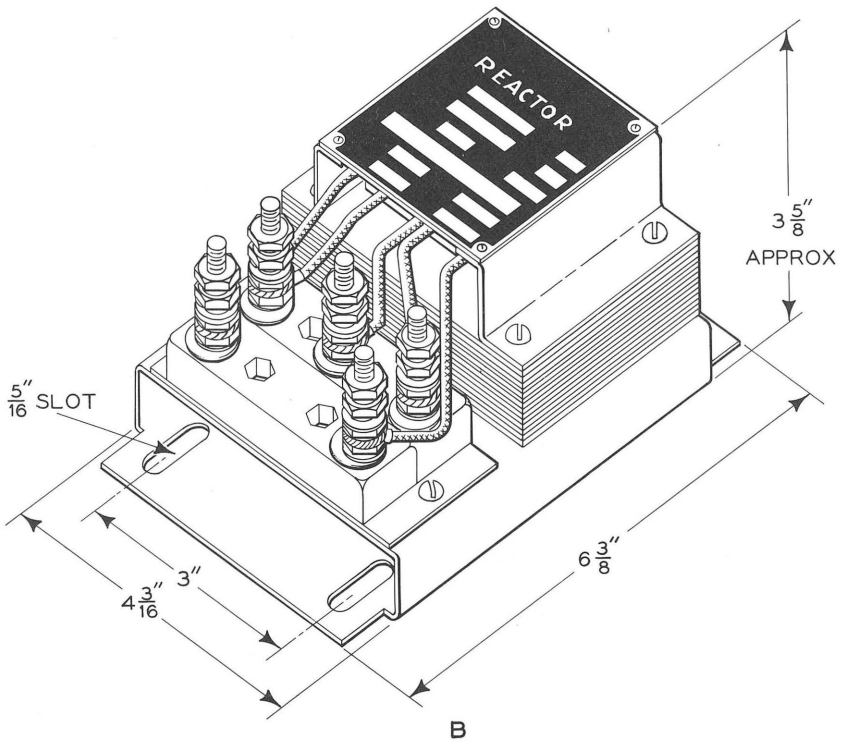
REACTOR
3 5/8" APPROX
5/16" SLOT
3"
4 3/16"
6 3/8"

B

Reactors.

REACTORS

To order, specify "Reactor" and give catalog number

REF.	NAME	CATALOG NUMBER
A	REACTOR, tapped, for controlling timing of inverse pulse length on rate code, for use with Type K relays	A18-160
A1	As above, except for use with Type B relays.	A18-165
B	REACTOR, tapped, for controlling timing of inverse pulse length on Trakode, for use with Type VTB relays	A18-170
B1	As above, except not tapped, for controlling pickup time of code repeater relay (TRAKODE ®)	A18-175

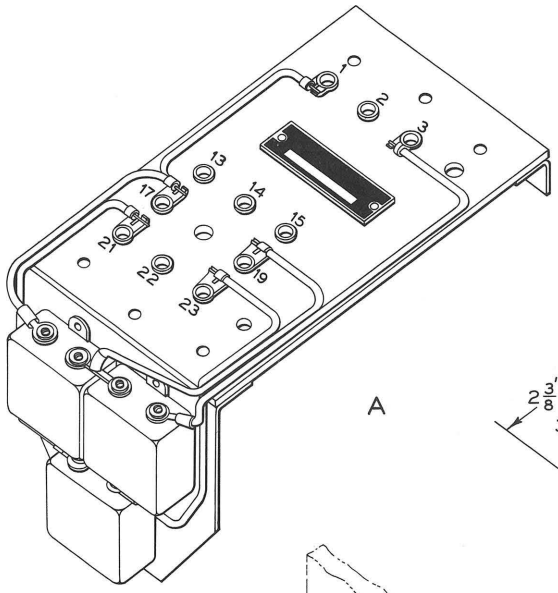

A

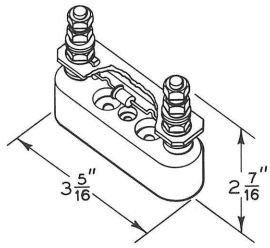

B

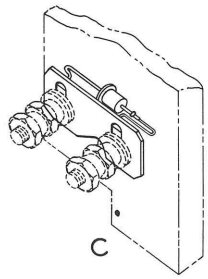

C

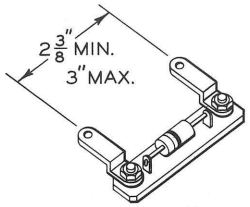

D

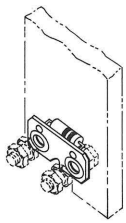

E

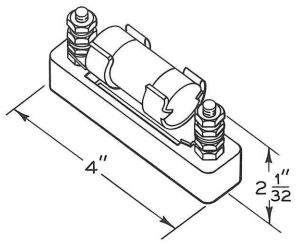

F

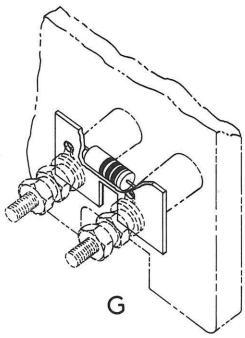

G

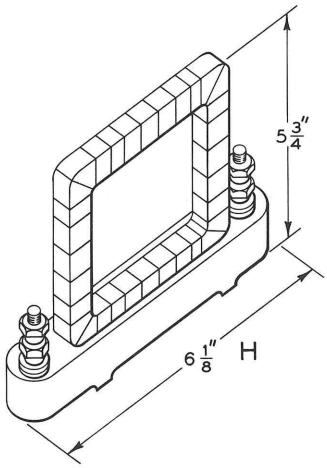

H

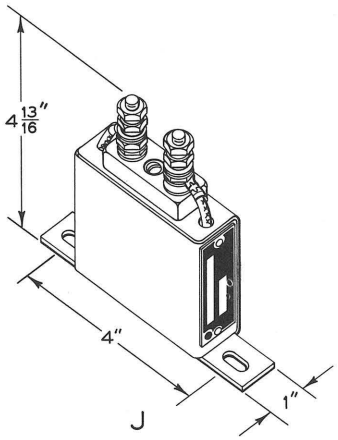

J

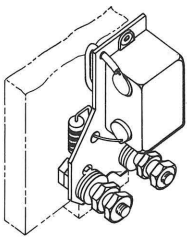

K

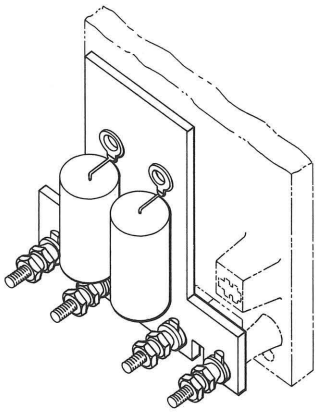

M

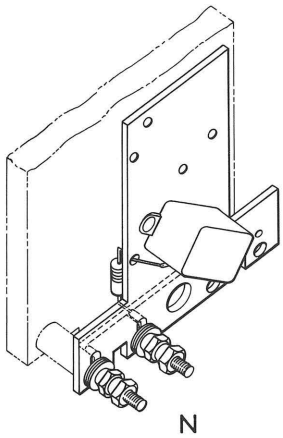

N

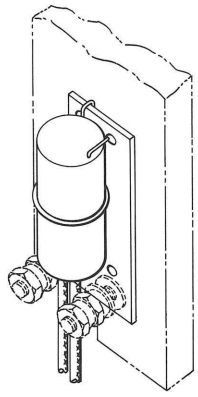

P

Suppressors, resistors and reactors.

SUPPRESSORS, RESISTORS AND REACTORS for Coded Track and Trakode®

Order by catalog number and name shown in bold type

REF.	NAME	CATALOG NUMBER
A	SUPPRESSOR UNIT, for use with master decoding transformer, Catalog No. A18-100	A18-180
A1	As above, except for use with master decoding transformer, Catalog No. A18-103	A18-183
B	RECTIFIER, maximum d. c. output 0. 250 amps. at 125° C; 0. 750 amps. at 25° C	**A53-120**
C	RECTIFIER, maximum d. c. output 0. 250 amps. at 125° C; 0. 750 amps. at 25° C	A53-115
D	RESISTOR, 1000 ohms, for mounting on Type K relay	A18-190
E	RESISTOR, 1000 ohms, for mounting on "E" post of Type B relay plugboard	A18-197
E1	As above, except 510 ohms	A18-199
E2	Same as Ref. E, except 270 ohms	A18-198
F	RESISTOR, 12. 5 ohms, ± 20%, to connect across track circuit, for arc suppression	A18-185
G	RESISTOR, 1000 ohms, for mounting on "E" post of Type VTB relay plugboard	A18-196
H	REACTOR, high frequency, radio interference choke	A18-193
J	SUPPRESSOR, has one 0. 05 mfd. capacitor and a 12 ohm resistor	A18-195
J1	As above, except has one 1 mfd. capacitor and one 12 ohm resistor, includes insulated mounting	A18-177
J2	Same as Ref. F, except has one 1 mfd. capacitor and one 250 ohm resistor, includes insulated mounting	A18-178
K	SUPPRESSOR, has one 0. 5 mfd. condenser and a resistor, for mounting on "E" post of Type B relay plugboard, for arc suppression	A18-200
M	SUPPRESSOR, has two 250 mfd. capacitors and two resistors, for mounting on Type VTB relay, for arc suppression	A18-205
M1	As above, except with single capacitor and resistor	A18-207
N	SUPPRESSOR, has 0. 5 mfd. condenser and a resistor, for mounting on Type VTB relay plugboard, for arc suppression	A18-210
P	SUPPRESSOR UNIT, 250 mfd., with 33 ohm resistor, for Type B relay plugboard	A18-107

Memoranda

CATALOG SECTION 30

HIGHWAY CROSSING PROTECTION

FLASHING-LIGHT SIGNALS

WITH ACCESSORIES

CONTENTS

Cantilever Assemblies	8-10
Crossarms with Type XC Units	18
Junction Box	16
Mast Assemblies	12
Phankill	18
Pinnacles	16
Pole Steps	16
Roundel Guards	18
Signal Assemblies	6
Signs	16
Types of Bases	15
Test Boxes	22
Warning Bells	16
General Information	3

Parts lists are available on request

GENERAL RAILWAY SIGNAL COMPANY

ROCHESTER, NEW YORK

Printed in U. S. A.

October 1960

Typical Type XC crossing signal.

HIGHWAY CROSSING PROTECTION

FLASHING-LIGHT SIGNALS

GENERAL DESCRIPTION

Highway crossing signals are shown two ways in this catalog: (1) as complete sets of subassembly components for assembly into typical standard signals, and (2) as individual subassembly components which you can select separately and assemble into any of a wide variety of signal arrangements.

Masts are furnished drilled for stationary crossarm.

Lamp bulbs are included with each signal. Bulbs are single-contact bayonet-base candelabra, bulb shape S11 - or S8 shown in Catalog Section 46. Specify your choice by catalog number.

All signal units are equipped with sidelights.

The following items are not included:

Foundation bolts - see Catalog Section 3.

Instrument Cases - see Catalog Section 5.

For further description of GRS highway crossing signals, see Bulletin 177. For alignment instructions, see Handbook 60.

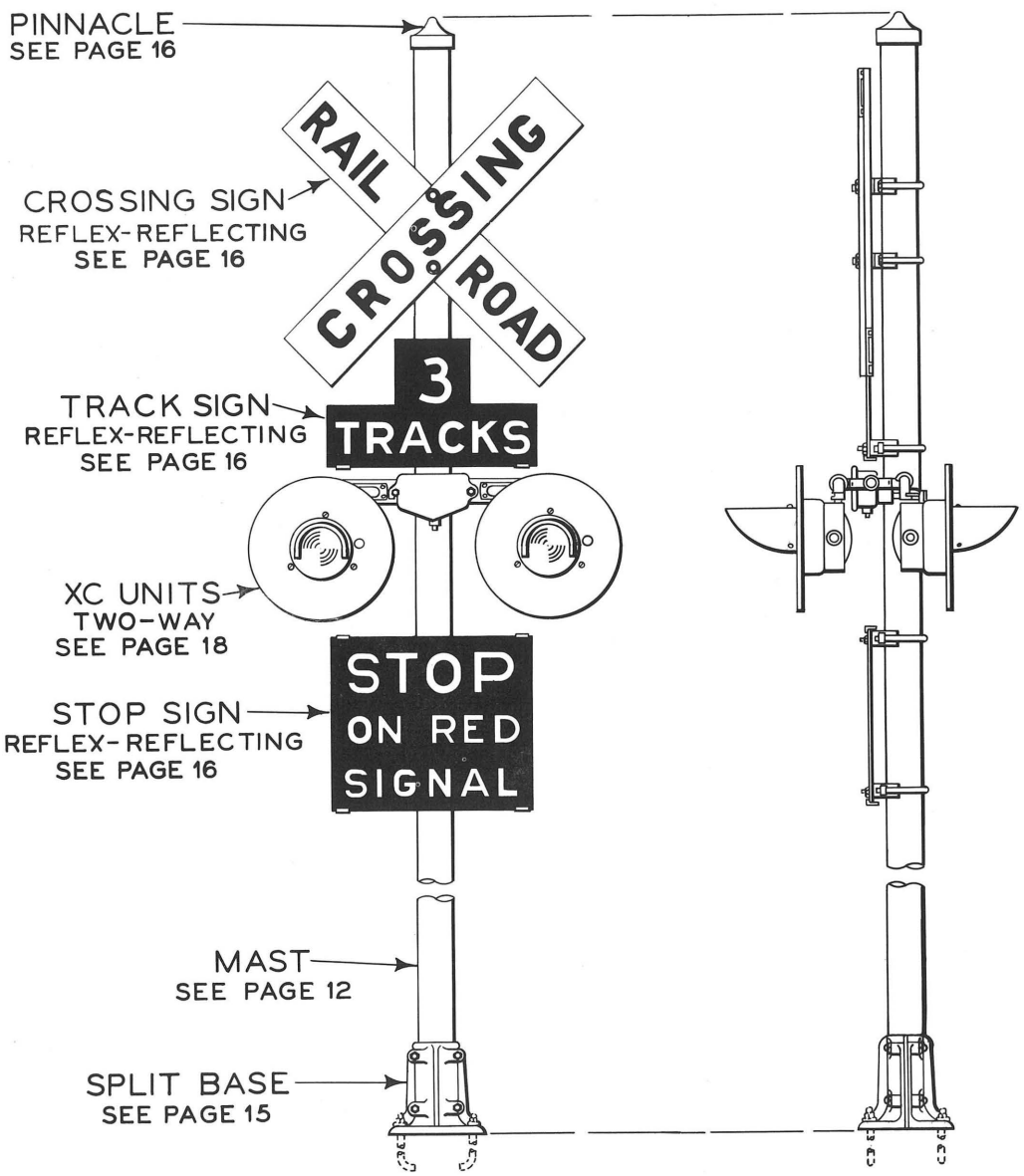

Typical XC crossing signal, see pages noted for complete list of each component.

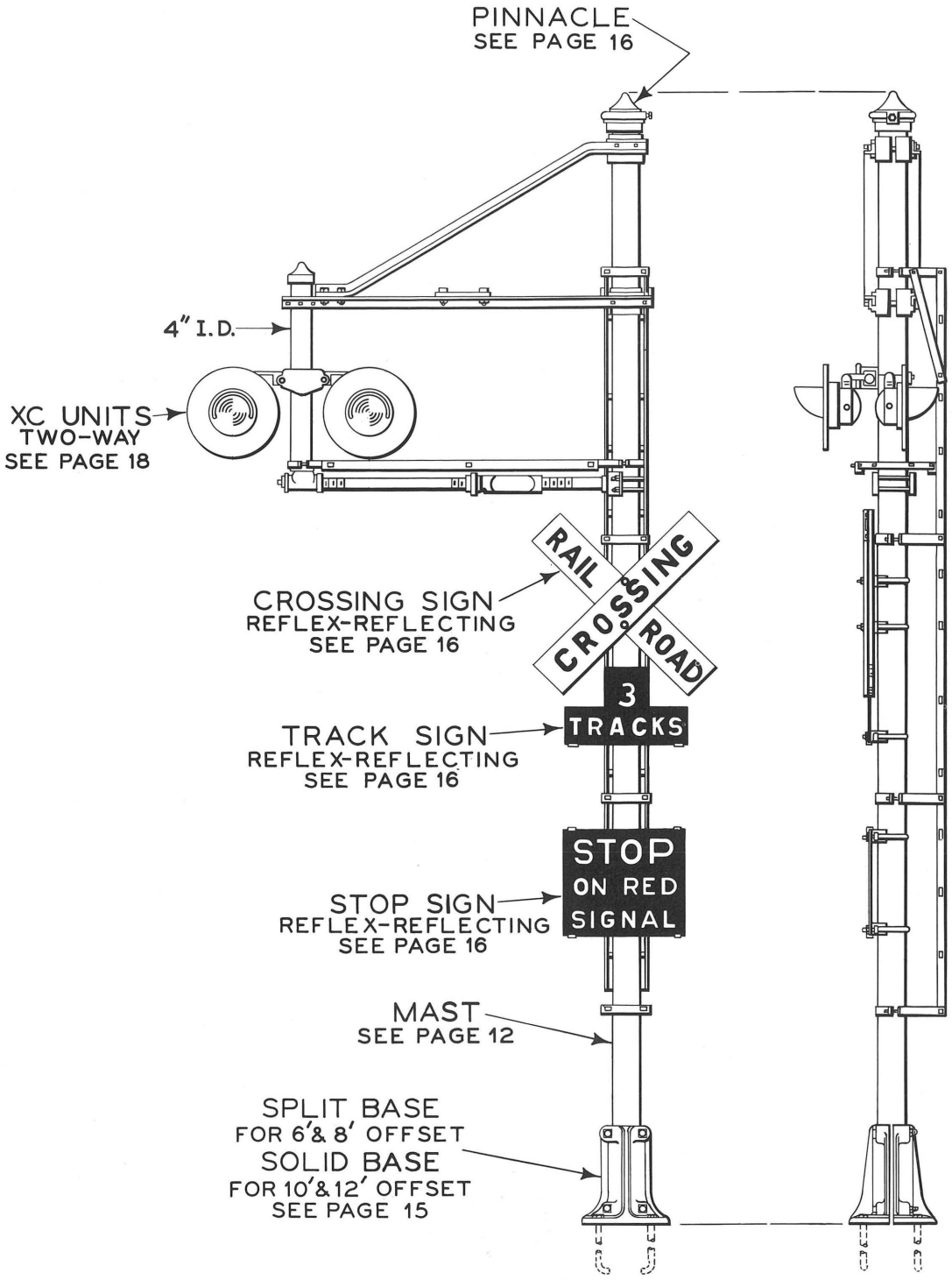

Typical XC crossing signal (cantilever type), see pages noted for complete list of each component.

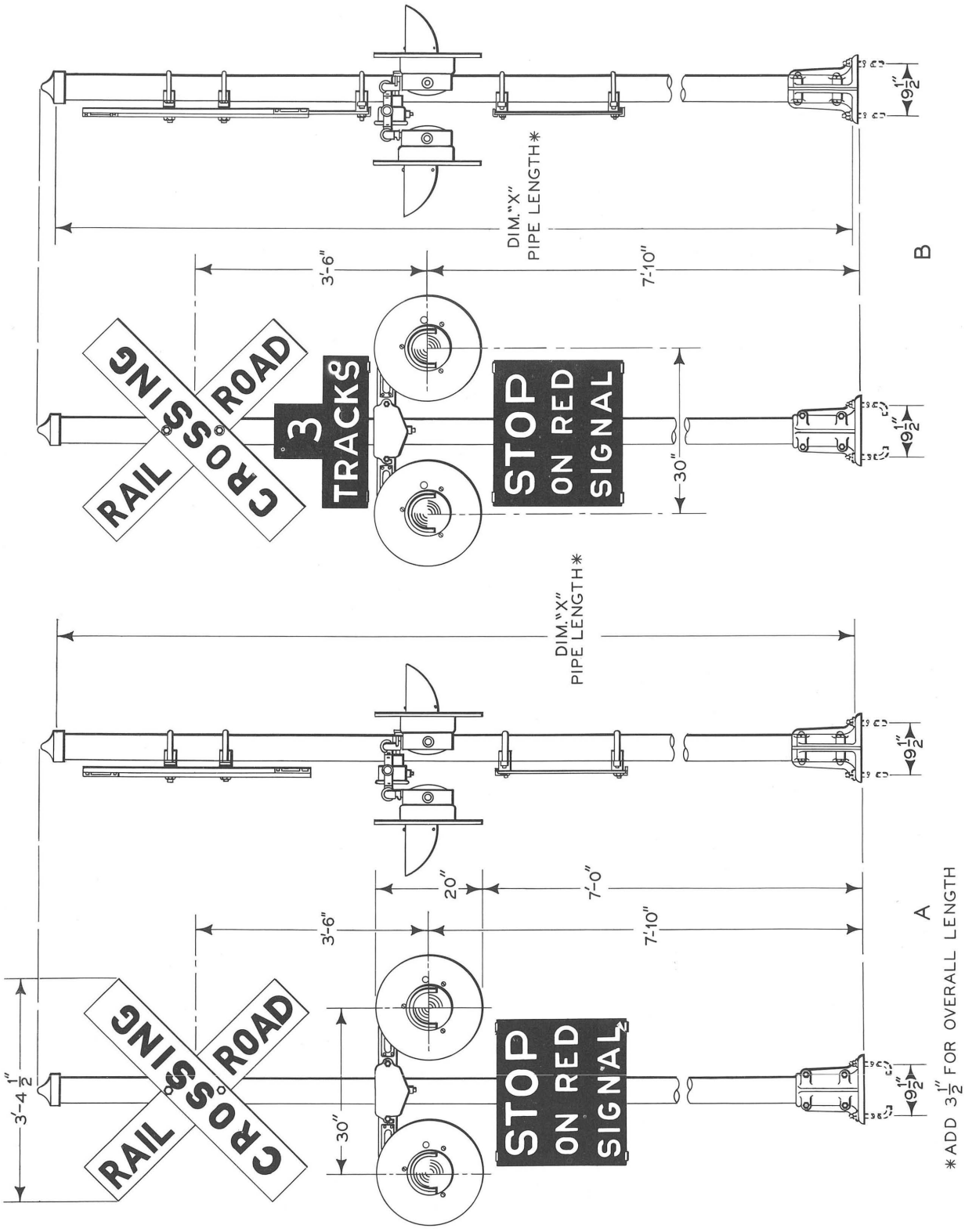

Highway crossing signals complete in standard AAR arrangements.

HIGHWAY CROSSING SIGNALS COMPLETE IN STANDARD AAR ARRANGEMENTS

These signals are furnished complete, with all parts, including lamp bulbs, needed to assemble a signal as illustrated in Reference A or B, except foundation bolts. Kits include split base, 4-inch diameter mast drilled for assemblies shown, and aluminum signs faced with reflex-reflecting material.

To order, specify "Crossing Signal", and give catalog number and numeral on track sign if sign is included. Assemblies include your choice of lamp bulbs. See Catalog Section 46 and specify choice by catalog number.

REF.	NUMBER OF LIGHT UNITS	ROUNDEL		WITH TRACK SIGN	CATALOG NUMBER	
		DEGREES TOTAL SPREAD	DEGREES DOWNWARD DEFLECTION		DIM. X= 13'	DIM. X= 15'
A	4	30	15	No	A30-100	†A30-103
A1	4	30	None	No	A30-105	†A30-108
B*	4	30	15	*Yes	A30-110	†A30-113
B1*	4	30	None	*Yes	A30-115	†A30-118

* Numeral on track sign must be specified.

† 15' mast is drilled and plugged, on both sides, with 3/4" pipe plugs, for additional crossarm.

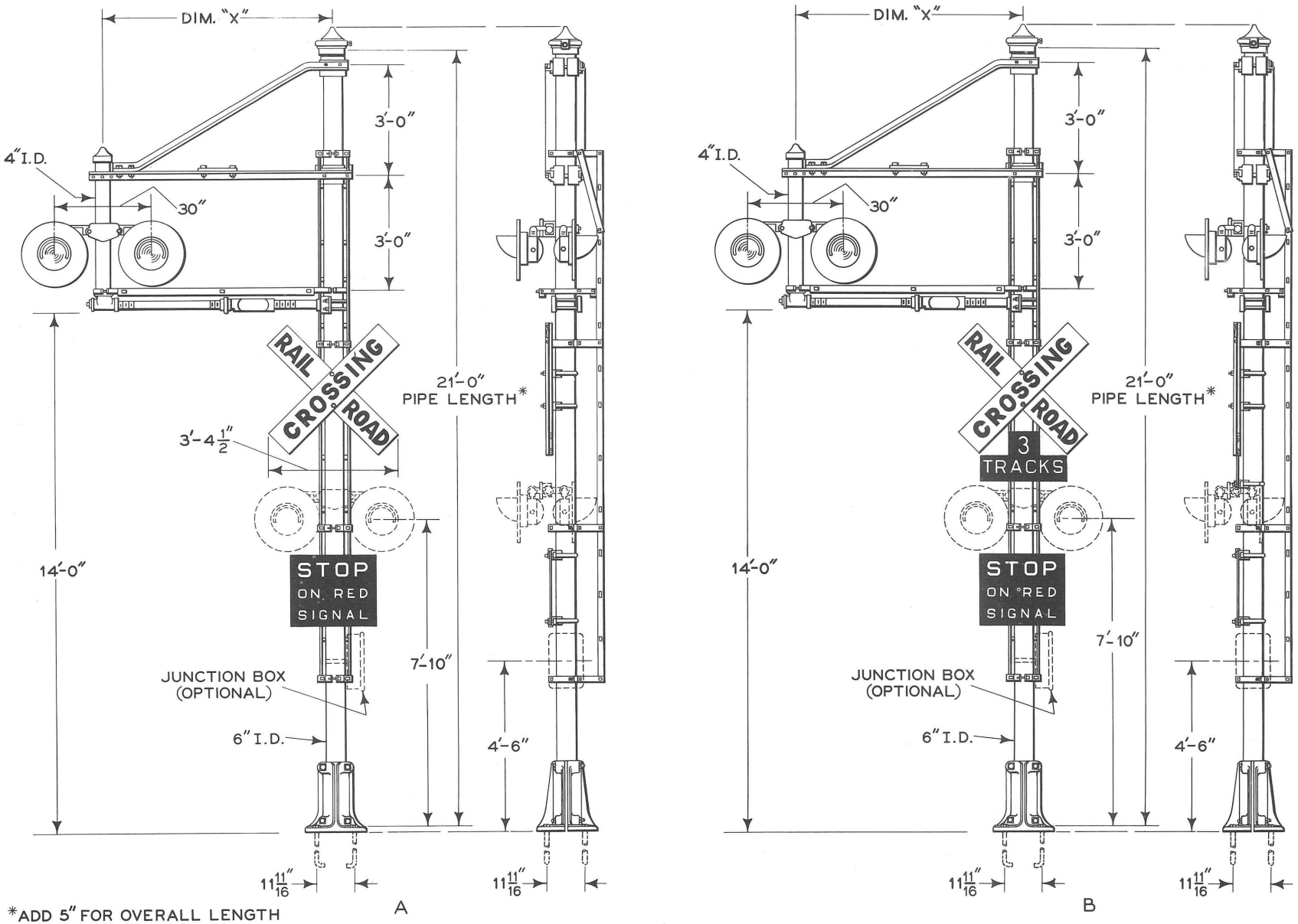

*ADD 5" FOR OVERALL LENGTH

Highway crossing signals complete in standard AAR arrangements.
Cantilever type.

HIGHWAY CROSSING SIGNALS COMPLETE IN STANDARD AAR ARRANGEMENTS

CANTILEVER TYPE
6' or 8' offset

These signals are furnished complete, with all parts, including lamp bulbs, needed to assemble a signal as illustrated in Reference A or B, except foundation bolts. Kits include split base, 6-inch diameter mast drilled for assemblies shown and aluminum signs faced with reflex-reflecting material.

To order, specify "Crossing Signal", and give catalog number and numeral on track sign if sign is included. Assemblies include your choice of lamp bulbs. See Catalog Section 46 and specify choice by catalog number.

WITH FOUR LIGHT UNITS ON CANTILEVER

REF.	ROUNDEL		WITH TRACK SIGN	DIM. "X"	CATALOG NUMBER
	DEGREES TOTAL SPREAD	DEGREES DOWNWARD DEFLECTION			
A	20	32	No	6'-0"	A30-120
A1	20	32	No	8'-0"	A30-125
B*	20	32	*Yes	6'-0"	A30-130
B1*	20	32	*Yes	8'-0"	A30-135

WITH FOUR LIGHT UNITS ON CANTILEVER AND FOUR LIGHT UNITS ON MAIN MAST.

REF.	ROUNDEL (CANTILEVER)		ROUNDEL (MAIN MAST)		WITH TRACK SIGN	DIM "X"	CATALOG NUMBER
	DEGREES TOTAL SPREAD	DEGREES DOWNWARD DEFLECTION	DEGREES TOTAL SPREAD	DEGREES DOWNWARD DEFLECTION			
A2	20	32	30	15	No	6'-0"	A30-121
A3	20	32	30	None	No	6'-0"	A30-122
A4	20	32	30	15	No	8'-0"	A30-126
A5	20	32	30	None	No	8'-0"	A30-127
B2*	20	32	30	15	*Yes	6'-0"	A30-131
B3*	20	32	30	None	*Yes	6'-0"	A30-132
B4*	20	32	30	15	*Yes	8'-0"	A30-136
B5*	20	32	30	None	*Yes	8'-0"	A30-137

* Numeral on track sign must be specified.

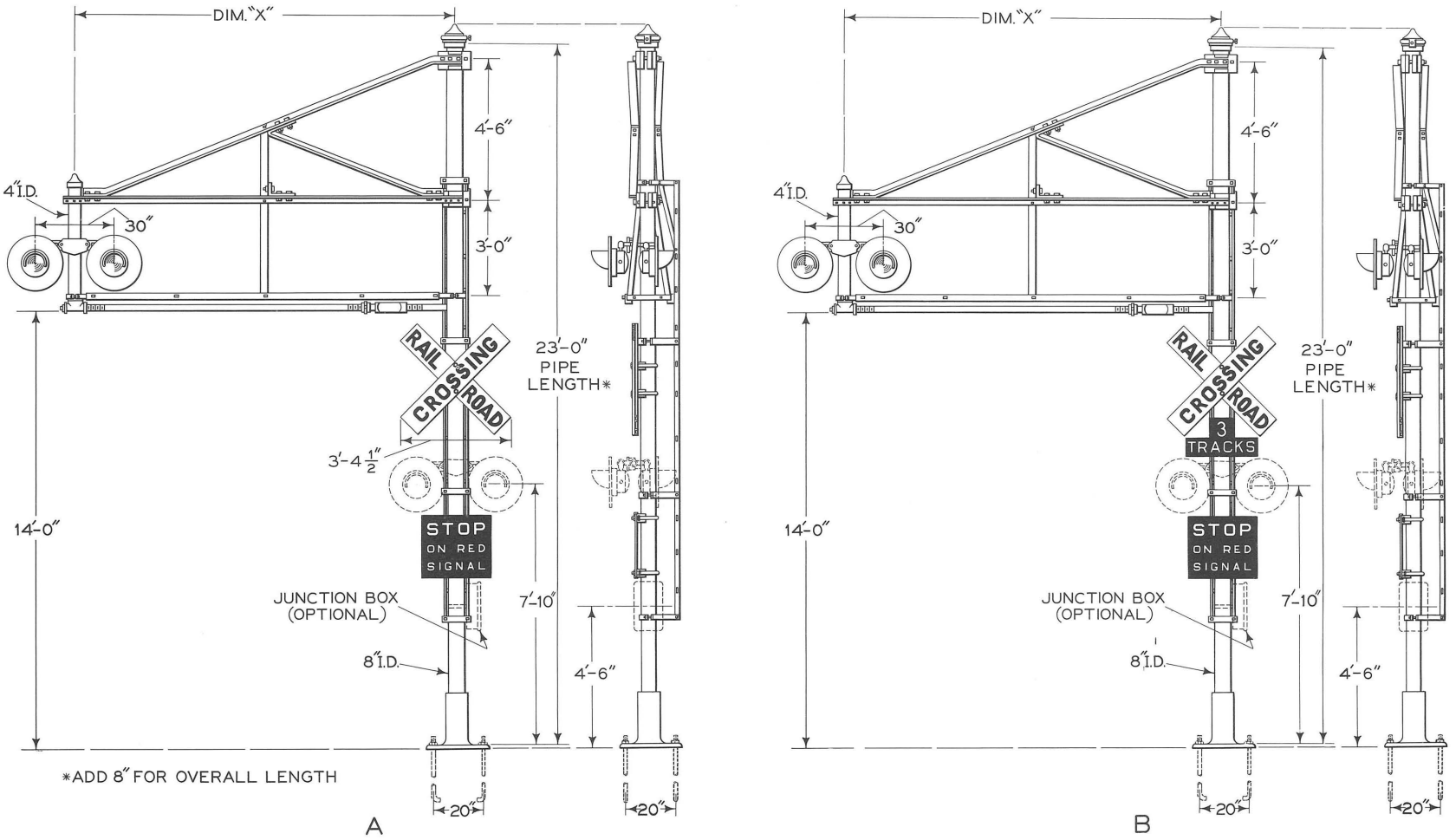

Highway crossing signals complete in standard AAR arrangements.
Cantilever type.

HIGHWAY CROSSING SIGNALS COMPLETE IN STANDARD AAR ARRANGEMENTS

CANTILEVER TYPE
10' or 12' offset

These signals are furnished complete, with all parts, including lamp bulbs, needed to assemble a signal as illustrated in Reference A or B, except foundation bolts. Kits include solid base, 8-inch diameter mast drilled for assemblies shown, and aluminum signs faced with reflex-reflecting material.

To order, specify "Crossing Signal", and give catalog number and numeral on track sign if sign is included. Assemblies include your choice of lamp bulbs. See Catalog Section 46 and specify choice by catalog number.

WITH FOUR LIGHT UNITS ON CANTILEVER

REF.	ROUNDEL		WITH TRACK SIGN	DIM. "X"	CATALOG NUMBER
	DEGREES TOTAL SPREAD	DEGREES DOWNWARD DEFLECTION			
A	20	32	No	10'-0"	A30-140
A1	20	32	No	12'-0"	A30-145
B*	20	32	*Yes	10'-0"	A30-150
B1*	20	32	*Yes	12'-0"	A30-155

WITH FOUR LIGHT UNITS ON CANTILEVER AND FOUR LIGHT UNITS ON MAIN MAST.

REF.	ROUNDEL (CANTILEVER)		ROUNDEL (MAIN MAST)		WITH TRACK SIGN	DIM "X"	CATALOG NUMBER
	DEGREES TOTAL SPREAD	DEGREES DOWNWARD DEFLECTION	DEGREES TOTAL SPREAD	DEGREES DOWNWARD DEFLECTION			
A2	20	32	30	15	No	10'-0"	A30-141
A3	20	32	30	None	No	10'-0"	A30-142
A4	20	32	30	15	No	12'-0"	A30-146
A5	20	32	30	None	No	12'-0"	A30-147
B2*	20	32	30	15	*Yes	10'-0"	A30-151
B3*	20	32	30	None	*Yes	10'-0"	A30-152
B4*	20	32	30	15	*Yes	12'-0"	A30-156
B5*	20	32	30	None	*Yes	12'-0"	A30-157

* Numeral on Track Sign must be specified.

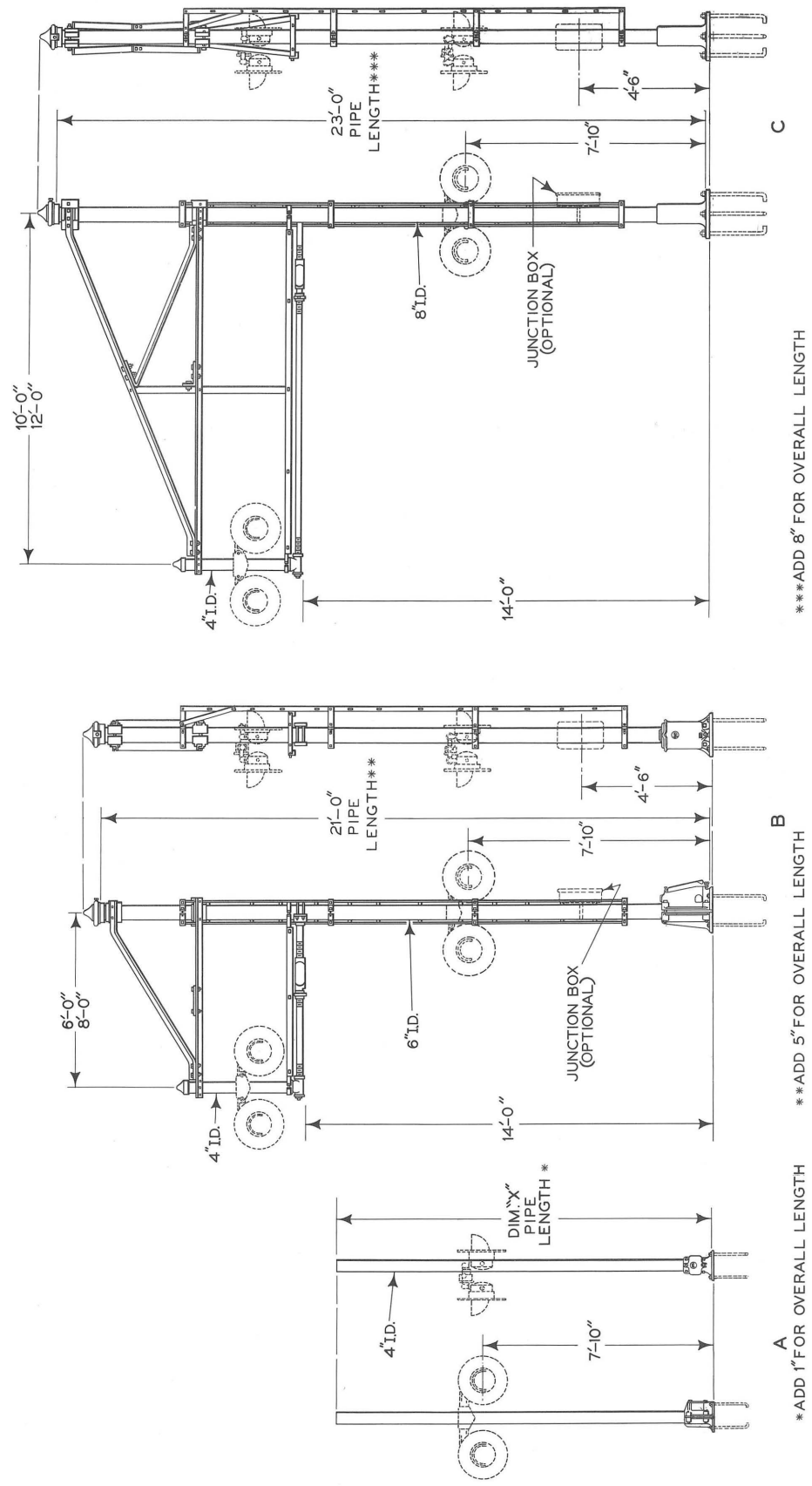

Mast assemblies for highway crossing signals.

MAST ASSEMBLIES FOR HIGHWAY CROSSING SIGNALS

Mast assemblies listed below are furnished complete as shown on the opposite page. Parts shown in dotted lines are not included. Masts are drilled, ready for installation of crossarms at locations indicated. Order signal units from page 18 and signs from page 16.

To order, specify "Mast Assembly" and give catalog number.

REF.	NAME	CATALOG NUMBER
A	MAST ASSEMBLY, 4" dia. pipe, with junction box base shown on page 15 Ref. A. Dimension "X" = 13'	A30-170
A1	MAST ASSEMBLY, 4" dia. pipe, with split base shown on page 15, Ref. B. Dimension "X" = 13'	A30-172
†A2	MAST ASSEMBLY, 4" dia. pipe, with junction box base shown on page 15 Ref. A. Dimension "X" = 15'	A30-173
†A3	MAST ASSEMBLY, 4" dia. pipe, with split base shown on page 15, Ref. B, Dimension "X" = 15'	A30-174
B	MAST ASSEMBLY, cantilever, 6" dia. pipe, with 6' offset, has pinnacle and junction box base shown on page 15, Ref. C and ladder assembly, 21'-0" pipe length	A30-175
B1	As above, except 8' offset	A30-177
B2	MAST ASSEMBLY, cantilever, 6" dia. pipe, with 6' offset, has pinnacle and junction box base shown on page 15, Ref. C and ladder assembly, 21'-0" pipe length. Main mast drilled for additional crossarm with four lights	A30-176
B3	As above, except 8' offset	A30-178
B4	MAST ASSEMBLY, cantilever, 6" dia. pipe, with 6' offset, has pinnacle and split base shown on page 15, Ref. D and ladder assembly, 21'-0" pipe length	A30-179
B5	As above, except 8' offset	A30-181
B6	MAST ASSEMBLY, cantilever, 6" dia. pipe, with 6' offset, has pinnacle and split base shown on page 15, Ref. D and ladder assembly, 21'-0" pipe length. Main mast drilled for additional crossarm with four lights	A30-180
B7	As above, except with 8' offset	A30-182
B8	MAST ASSEMBLY, cantilever, 6" dia. pipe, with 6' offset, has pinnacle and split base shown on page 15, Ref. D and ladder assembly, 21'-0" pipe length. Main mast drilled for junction box (Ref. E, page 17) as shown in dotted lines	A30-183
B9	As above, except 8' offset	A30-184

† Mast is drilled and plugged, on both sides, with 3/4" pipe plugs, for additional crossarm.

MAST ASSEMBLIES FOR HIGHWAY CROSSING SIGNALS

To order, specify "Mast Assembly" and give catalog number.

REF.	NAME	CATALOG NUMBER
B10	MAST ASSEMBLY, cantilever, 6" dia. pipe, with 6' offset, has pinnacle and split base shown on page 15, Ref. D and ladder assembly, 21'-0" pipe length. Main mast drilled for junction box (Ref. E page 17) as shown in dotted lines, also drilled for additional crossarm with four lights	A30-186
B11	As above, except 8' offset	A30-188
C	MAST ASSEMBLY, cantilever, 8" dia. pipe, with 10' offset, has pinnacle and solid base shown on page 15, Ref. E and ladder assembly, 23'-0" pipe length	A30-185
C1	As above, except 12' offset	A30-187
C2	Same as Ref. C, 10' offset, except mast drilled for junction box (Ref. E, page 17) as shown in dotted lines	A30-189
C3	Same as Ref. C1, 12' offset, except mast drilled for junction box (Ref. E, page 17) as shown in dotted lines	A30-190
C4	MAST ASSEMBLY, cantilever, 8" dia., pipe, with 10' offset, has pinnacle and solid base shown on page 15, Ref. E and ladder assembly, 23'-0" pipe length. Main mast drilled for additional cross-arm with four lights	A30-191
C5	As above, except 12' offset	A30-192
C6	MAST ASSEMBLY, cantilever, 8" dia. pipe, with 10' offset, has pinnacle and solid base shown on page 15, Ref. E and ladder assembly, 23' -0" pipe length. Main mast drilled for junction box (Ref. E, page 17) as shown in dotted lines, also drilled for additional cross-arm with four lights	A30-193
C7	As above, except 12' offset	A30-194

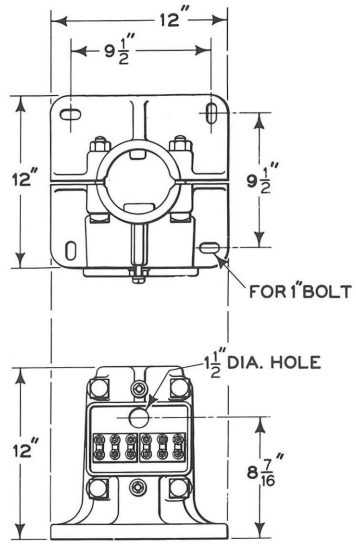

SPLIT JUNCTION BOX BASE
FOR 4" DIA. MAST
A

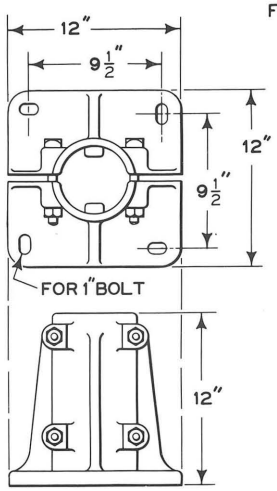

SPLIT BASE
FOR 4" DIA. MAST
B

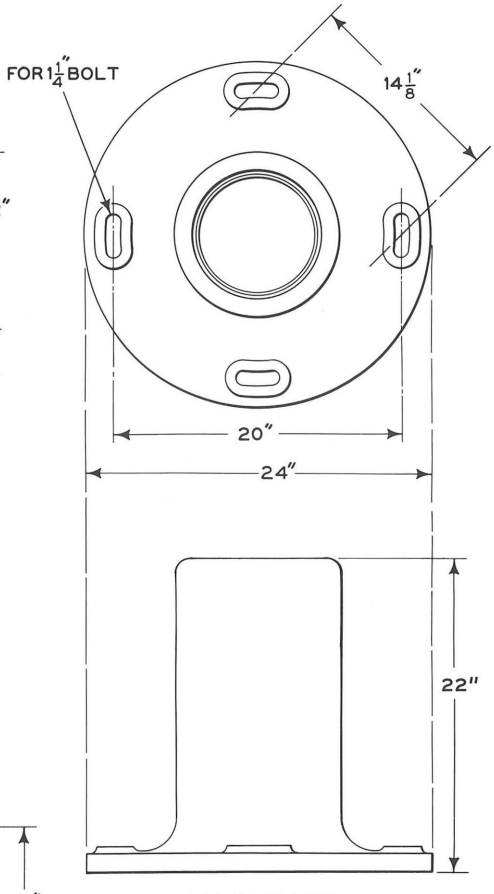

SOLID BASE
FOR 8" DIA. MAST
E

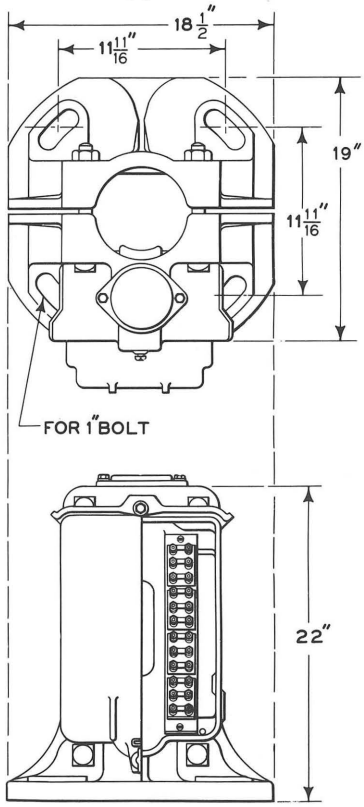

SPLIT JUNCTION BOX BASE
FOR 6" DIA. MAST
C

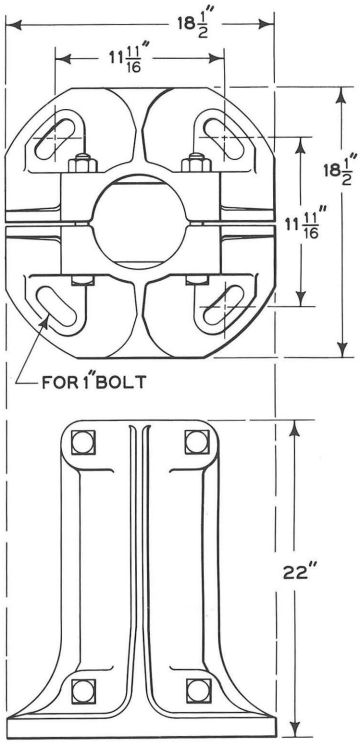

SPLIT BASE
FOR 6" DIA. MAST
D

Details of bases offered with mast assemblies, page 12.

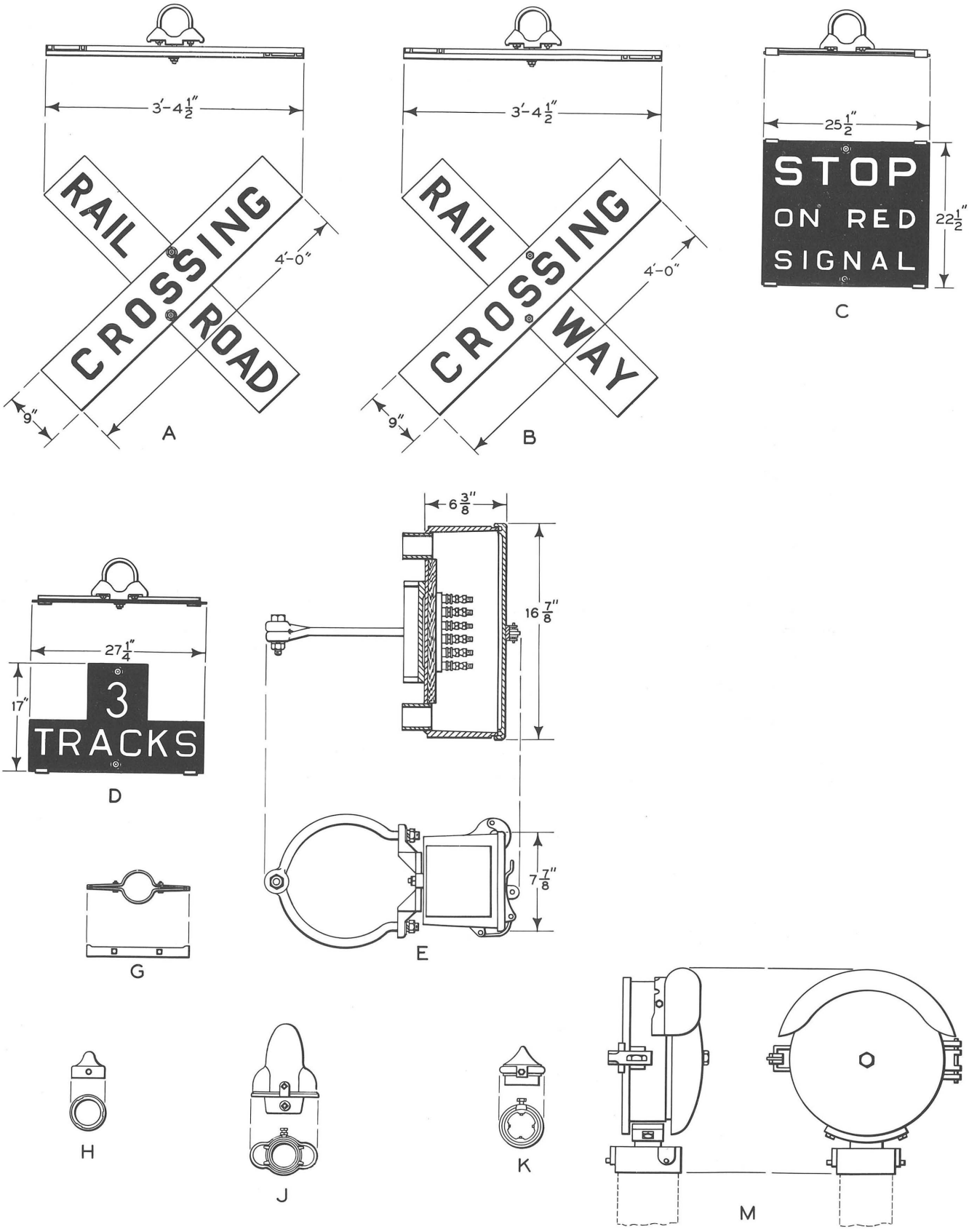

Signs, pinnacles, pole steps, junction box, and bell.

SIGNS, PINNACLES, POLE STEPS, JUNCTION BOX AND BELL

Order by catalog number and name shown in bold type

REF.	NAME	CATALOG NUMBER FOR 4" MAST	FOR 6" MAST	FOR 8" MAST
A	RAILROAD CROSSING SIGN, 90 degree. Reflex-reflecting sheet material permanently bonded to double-channeled aluminum extrusions	A30-200	A30-201	A30-202
B	RAILWAY CROSSING SIGN, 90 degree . Reflex-reflecting sheet material permanently bonded to double-channeled aluminum.	A30-205	A30-206	A30-207
C	STOP SIGN, reflex-reflecting sheet material permanently bonded to sheet aluminum.	A30-210	A30-211	A30-212
D	MULTIPLE TRACKS SIGN "3 TRACKS" reflex-reflecting sheet material permanently bonded to sheet aluminum. . .	A30-215	A30-216	A30-217
D1	Same as Ref. D except "2 TRACKS" . .	A30-220	A30-221	A30-222
D2	Same as Ref. D except "4 TRACKS" . .	A30-225	A30-226	A30-227
E	JUNCTION BOX, complete, with six-way terminal block, two 1-3/4" dia. bushings for wires from mast, and U bolt.	———	A30-229	A30-230
G	POLE STEP	A30-240	A30-241	A30-243
H	PINNACLE, plain	A30-245	———	———
J	PINNACLE AND CAP, for use as wire inlet.	P5-370	———	———
K	PINNACLE, plain	———	A30-255	A30-257
M	WARNING BELL, 12" gong, for top-of-mast mounting 8 to 17 volt d-c. operation.	A30-260	———	———

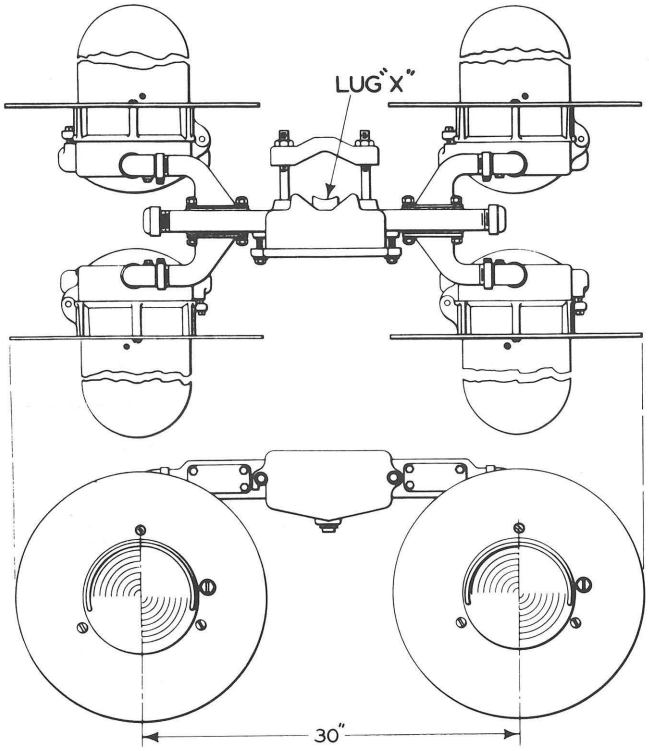

A-STATIONARY ARM WITH FOUR TYPE XC UNITS

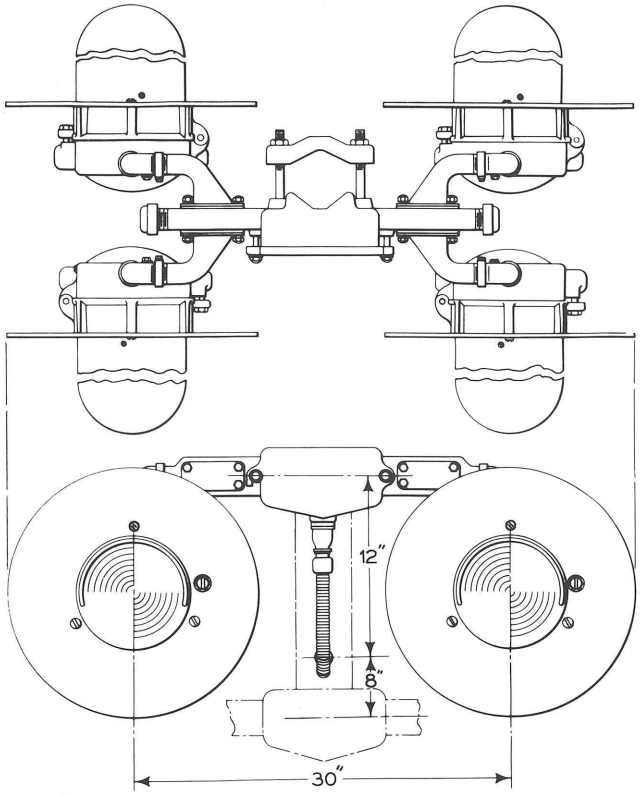

C-ADJUSTABLE ARM WITH FOUR TYPE XC UNITS

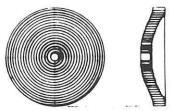

E-PHANKILL

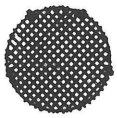

F-ROUNDEL GUARD

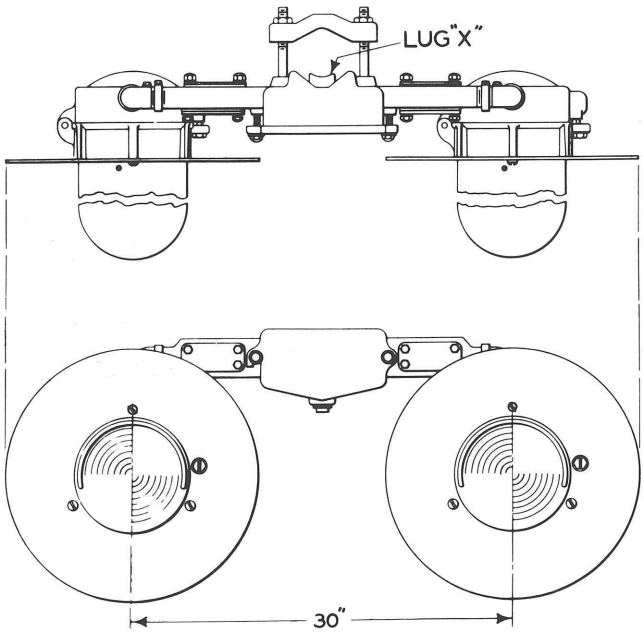

B-STATIONARY ARM WITH TWO TYPE XC UNITS

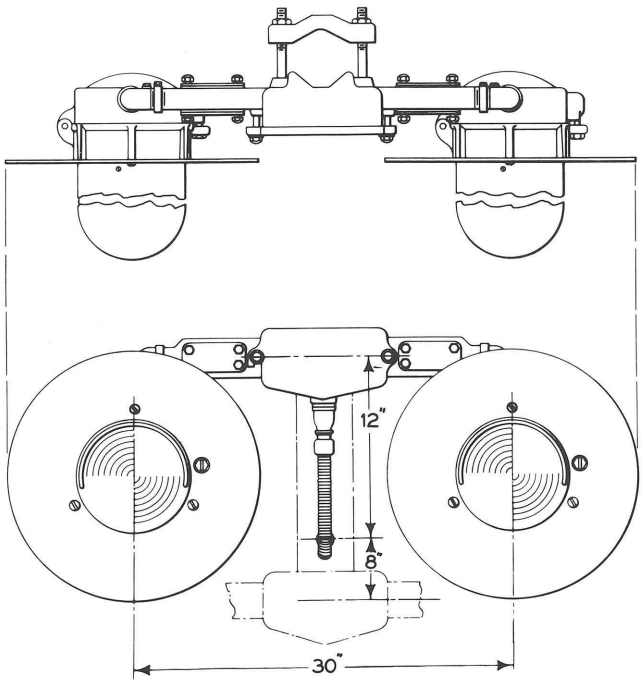

D-ADJUSTABLE ARM WITH TWO TYPE XC UNITS

Crossarms with Type XC units, stationary and adjustable.

CROSSARMS WITH TYPE XC UNITS

WITH FOUR UNITS FOR INDICATIONS IN BOTH DIRECTIONS
or
WITH TWO UNITS FOR INDICATIONS IN ONE DIRECTION

Note: Crossarms come complete, with lamp bulbs, ready to mount on 4-inch mast assemblies listed on page 13. Each crossarm has an integral junction box with standard 14-24 A. A. R. binding posts for convenience in making wire connections.

Crossarms Refs. C and D are adjustable arms without lug "X". They may be mounted approximately 20" above stationary arm and rotated up to 90 degrees from the stationary arm.

The adjustable arms come with the necessary conduit and fittings for installing on mast; however a 3/4" standard pipe tapped hole for the conduit must be drilled and tapped at time of installation.

All Type XC units are equipped with 8-3/8" diameter roundels with various degrees of spread and deflection as listed below.

Provision is made in the lamp housing for installation of a Phankill unit if required.

To order, specify "XC Crossarm" and give catalog number. Assemblies include your choice of lamp bulbs. See Catalog Section 46, and specify choice by catalog number.

REF.	DEGREES TOTAL SPREAD	DEGREES DOWNWARD DEFLECTION	CATALOG NUMBER
STATIONARY ARM With FOUR TYPE XC UNITS			
A	30	15	A30-270
A1	30	None	A30-271
A2	20	32	A30-272
A3	70	None	A30-273
A4	160	12	A30-274
STATIONARY ARM With TWO TYPE XC UNITS			
B	30	15	A30-280
B1	30	None	A30-281
B2	20	32	A30-282
B3	70	None	A30-283
B4	160	12	A30-284
ADJUSTABLE ARM With FOUR TYPE XC UNITS			
C	30	15	A30-290
C1	30	None	A30-291
C2	20	32	A30-292
C3	70	None	A30-293
C4	160	12	A30-294

(Continued on following page)

CROSSARMS WITH TYPE XC UNITS

WITH FOUR UNITS FOR INDICATIONS IN BOTH DIRECTIONS
or
WITH TWO UNITS FOR INDICATIONS IN ONE DIRECTION

To order, specify "XC Crossarm" and give catalog number.

ADJUSTABLE ARM With TWO TYPE XC UNITS			
REF.	DEGREES TOTAL SPREAD	DEGREES DOWNWARD DEFLECTION	CATALOG NUMBER
D	30	15	A30-300
D1	30	None	A30-301
D2	20	32	A30-302
D3	70	None	A30-303
D4	160	12	A30-304

Order by catalog number and name shown in bold type.

REF.	NAME	CATALOG NUMBER
E	PHANKILL, blocks external light from signal to prevent illumination of signal from reflected light, complete with hardware for attaching to signal units, Refs. A, B, C and D .	A30-310
F	ROUNDEL GUARD, of heavy steel wire, for Refs. A, B, C and D	A30-315

Memoranda

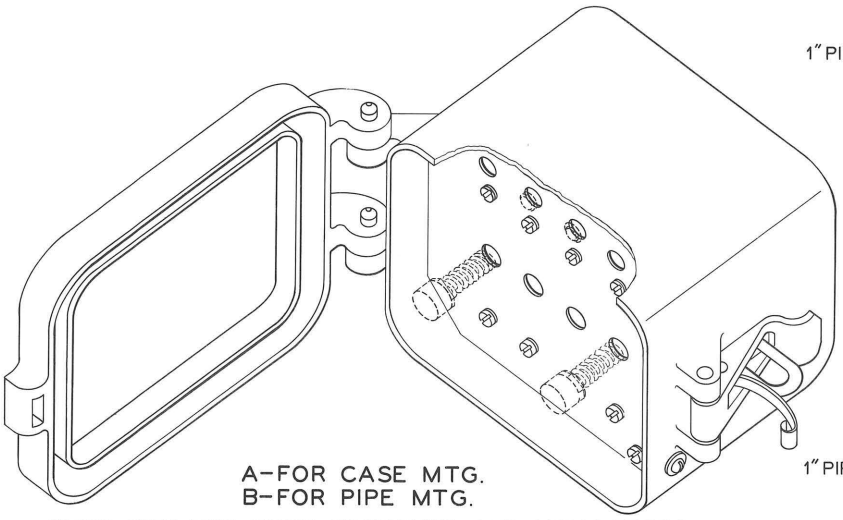

A–FOR CASE MTG.
B–FOR PIPE MTG.

TEST BOX FOR TEST SWITCHES AND INDICATORS

MOUNTING METHODS
FOR REF. B& D

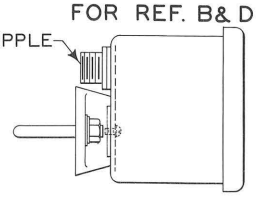

PIPE

FOR REF. A&C

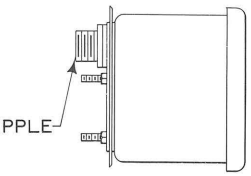

CASE

HEIGHT–$6\frac{7}{8}$"
WIDTH–$9\frac{3}{4}$"
DEPTH–$5\frac{1}{2}$"

MAXIMUM CAPACITY OF LIGHTS AND SWITCHES		
REF.	LIGHTS	SWITCHES
A &B	2 – 4	2 4 –
C& D	2	2

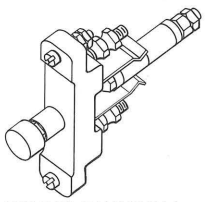

E–TEST SWITCH
PUSH–PULL TYPE

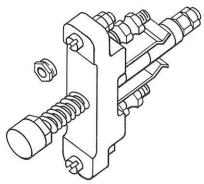

F–TEST SWITCH
PUSH TYPE
SPRING RETURN

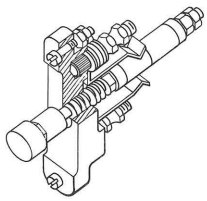

G–TEST SWITCH
PULL TYPE
SPRING RETURN

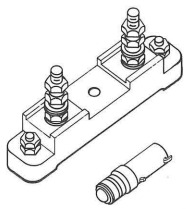

H–LAMP SOCKET (INDICATOR)
AND
TERMINAL BLOCK

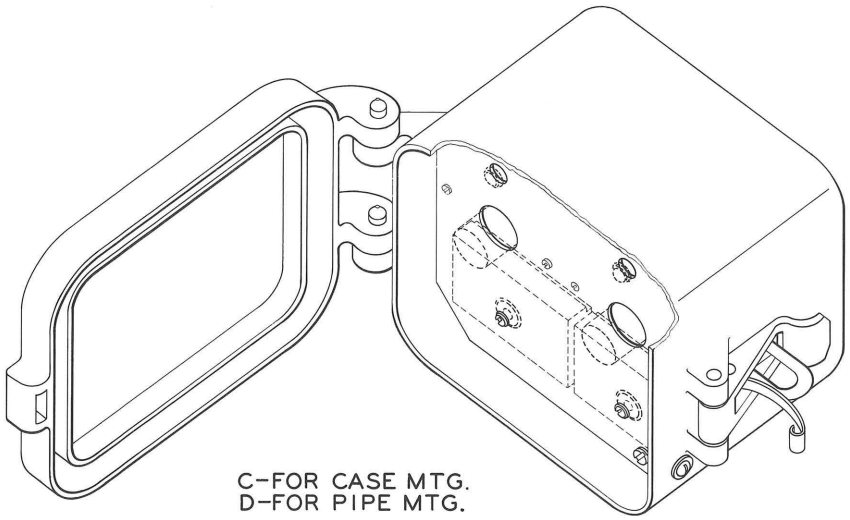

C–FOR CASE MTG.
D–FOR PIPE MTG.

TEST BOX FOR PUSH BUTTONS AND INDICATORS
(MAX. 2 EACH)

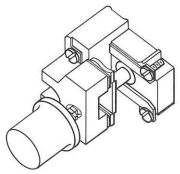

J
PUSH BUTTON

K
LAMP SOCKET
(INDICATOR)

Test boxes.

TEST BOXES

These are cast iron boxes with weatherproof, gasketed doors. Each box includes a panel, drilled to accept lamp sockets (indicators), switches or push buttons. See tabulation on opposite page for capacities. Switches, Refs. E, F, and G, are furnished with normally-closed contacts, but they can be rearranged in the field to normally open if desired. All are complete with hardware, ready to install on test box panels. Test switches E, F, and G have binding posts for terminating field wiring. Lamp sockets H, H1, and H2, which include separate terminal blocks, are for use in test boxes A and B. Lamp sockets K, K1, and K2, which do not include terminal blocks, and push button J are for use in test boxes C and D. These boxes have built-in terminal boards for terminating field wiring.

Order by catalog number and name shown in bold type

REF.	NAME	CATALOG NUMBER
A	TEST BOX, for bolting on case, panel drilled for test switches and indicating lamps. Order test switches and indicating lamps separately. Includes 1" pipe nipple and all mounting hardware . .	A30-400
B	TEST BOX, for fastening to pipe. Panel drilled for test switches and indicating lamps. Order test switches and indicating lamps separately. Includes 1" pipe nipple, adapter and U-bolt for 4" dia. pipe	A30-403
B1	As above, except for 5" dia. pipe	A30-404
B2	Same as above, except for 6" dia. pipe	A30-405
B3	Same as above, except for 8" dia. pipe	A30-406
C	TEST BOX, for bolting on case. Panel drilled for two push buttons and two indicating lamps. Order push buttons and indicating lamps separately. Includes 1" pipe nipple and all mounting hardware	A30-409
D	TEST BOX, for fastening to pipe. Panel drilled for two push buttons and two indicating lamps. Order push buttons and indicating lamps separately. Includes 1" pipe nipple, adapter, and U-bolts for 4" dia. pipe	A30-412
D1	As above, except for 5" dia. pipe	A30-413
D2	Same as above, except for 6" dia. pipe	A30-414
D3	Same as above, except for 8" dia. pipe	A30-415
E	TEST SWITCH, push-pull type, fits A and B	A30-418
F	TEST SWITCH, push type, spring-return - controlled by cover. Shown in cover-open position, fits A and B	A30-420
G	TEST SWITCH, pull type, spring return, fits A and B	A30-423

(Continued on following page)

TEST BOXES

Order by catalog number and name shown in bold type

REF.	NAME	CATALOG NUMBER
H	**LAMP SOCKET**, with red bullseye. Takes telephone type, slide base lamp (lamp not included, see Catalog Section 46) includes terminal block and connectors for use in boxes A and B	A30-426
H1	As above, except with green bullseye	A30-427
H2	Same as above, except with white bullseye	A30-428
J	**PUSH BUTTON**, one contact normally open and one normally closed, includes all mounting hardware, fits C and D	A30-431
K	**LAMP SOCKET**, with red bullseye. Takes telephone type, slide base lamp (lamp not included, see Catalog Section 46) includes connectors for use in boxes C and D	A30-434
K1	As above, except with green bullseye	A30-435
K2	Same as above, except with white bullseye	A30-436

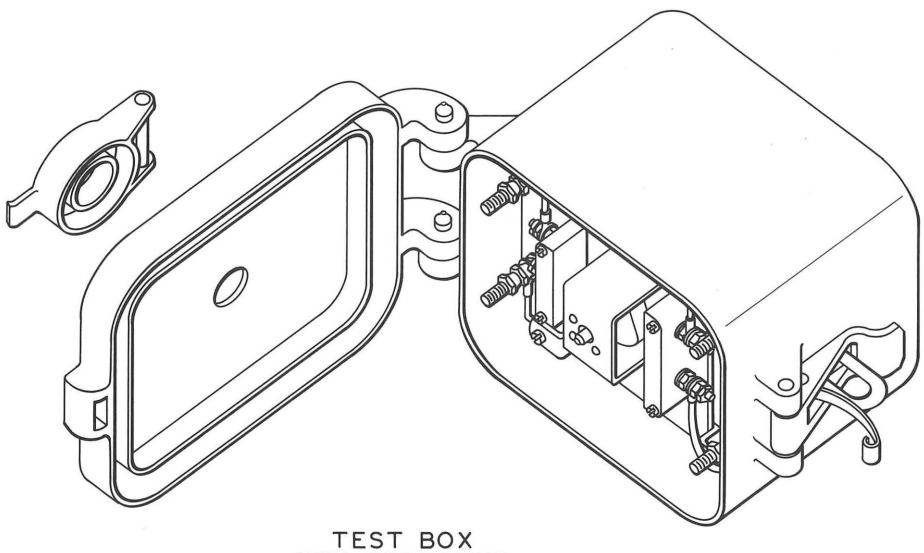

TEST BOX
KEY-OPERATED

HEIGHT - $6\frac{7}{8}$"
WIDTH - $9\frac{3}{4}$"
DEPTH - $6\frac{1}{2}$"

MOUNTING METHODS

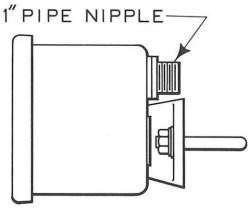

PIPE

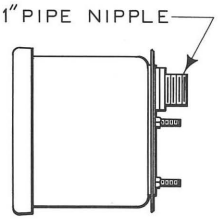

CASE

Test boxes - key operated.

TEST BOXES - KEY OPERATED

These are cast iron boxes with weatherproof, gasketed doors. Each box has a key-operated switch with two single-pole, single-throw contacts, one contact on the left side of the box and one on the right. Binding posts are included for terminating field wiring. The switches are operated by means of standard railroad keys, in patterns as specified in your order. Keyhole is protected by a gasketed, spring-return cover.

When ordering key-operated test boxes, please send sample or drawing of switch key - if you have not already supplied us with same on previous orders.

Test boxes include 1" pipe nipple and all mounting hardware.

When ordering, specify "Key Test Box" and give catalog number.

KEY ROTATES CLOCKWISE			CATALOG NUMBER				
	CONTACT POSITION			PIPE MOUNTING			
KEY POSITION	LEFT CONTACT	RIGHT CONTACT	CASE MOUNTING	4" dia.	5" dia.	6" dia.	8" dia.
Normal	Closed	Open	A30-450	A30-453	A30-454	A30-455	A30-456
Turned Clock-Wise	Open	Closed					
Normal	Closed	Closed	A30-460	A30-463	A30-464	A30-465	A30-466
Turned Clock-Wise	Open	Open					
Normal	Open	Open	A30-470	A30-473	A30-474	A30-475	A30-476
Turned Clock-Wise	Closed	Closed					
KEY ROTATES CLOCKWISE AND COUNTERCLOCKWISE							
Normal	Closed	Open	A30-480	A30-483	A30-484	A30-485	A30-486
Turned Clock-Wise	Closed	Closed					
Turned Counter-Clock-Wise	Open	Open					
Normal	Open	Open	A30-490	A30-493	A30-494	A30-495	A30-496
Turned Clock-Wise	Closed	Open					
Turned Counter-Clock-Wise	Open	Closed					

Memoranda

CATALOG SECTION 38

Model 9A Indicator

Motor Car or Switch

GENERAL RAILWAY SIGNAL COMPANY

ROCHESTER, NEW YORK

Printed in U. S. A.

A1802

July 1962

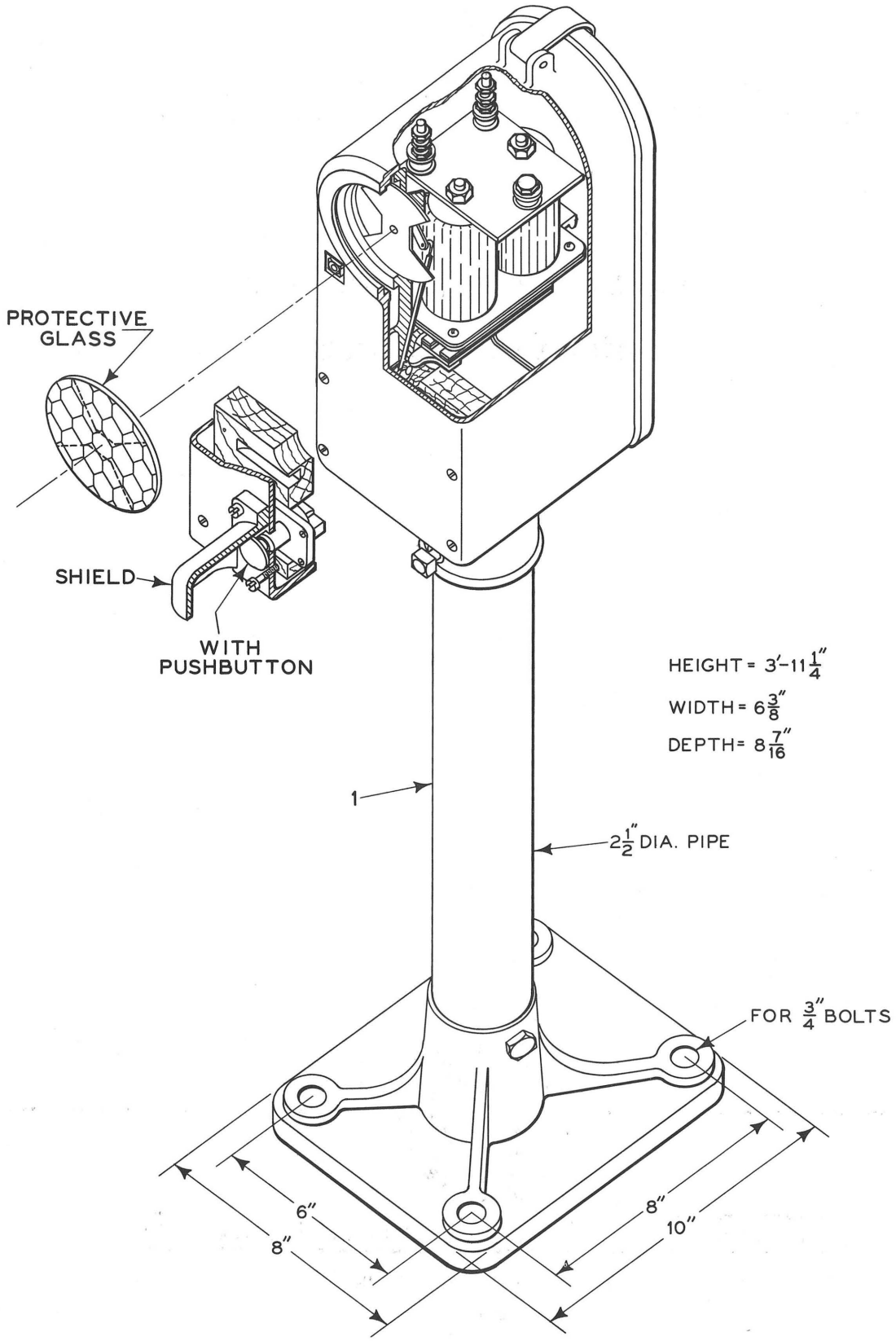

Model 9A indicator.

MODEL 9A INDICATOR

This indicator has a two-coil, tractive-armature relay structure, without contacts. A linkage, connected to the armature, operates a blade to produce aspects as shown in Figure 1. Case is cast iron with gasketed, removable door with two screened ventilators and a spring cam hasp. A socket, cast integrally with the case, provides for mounting on two and one-half inch pipe. Wire entrance is through mounting socket. All aspect elements are coated with reflex-reflecting materials, in colors as noted in Figure 1, to provide good visibility. Window is wire-reinforced glass. Push button, where supplied, is single-pole, single throw, normally open and is wired to coils so that indicator is connected to circuit only when button is pushed. A cast iron shield protects the button. Coil and push button have AAR 14-24 binding posts.

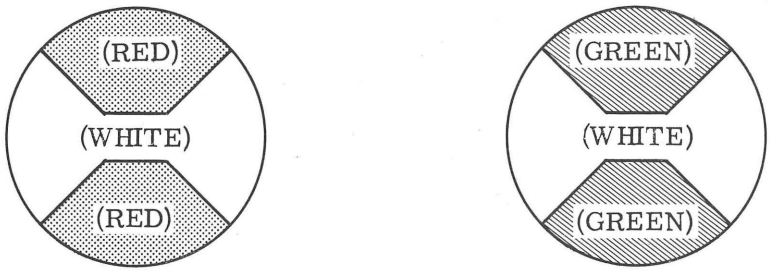

Aspect when deenergized

Figure 1.

Aspect when energized

When ordering, specify "Indicator" and give catalog number.

RESISTANCE OHMS	PICKUP AND WORKING AMPERES	WITH OR WITHOUT BASE	CATALOG NUMBER	
			WITHOUT PUSHBUTTON	WITH PUSHBUTTON
55	.031	With	A38-100	A38-103
126	.022	"	A38-105	A38-108
430	.013	"	A38-110	A38-113
640	.011	"	A38-115	A38-118
55	.031	Without	A38-225	A38-228
126	.022	"	A38-230	A38-233
430	.013	"	A38-235	A38-238
640	.011	"	A38-240	A38-243

Order by catalog number and name shown in bold type

REF.	NAME	CATALOG NUMBER
1	POLE and BASE, 2'-7" long overall, for mounting Model 9A indicator	A38-250

Memoranda

CATALOG SECTION 46

Lamps—Incandescent

CONTENTS

	Page
Single Contact, Bayonet Base	4
Rebased	6
Miscellaneous	8

GENERAL RAILWAY SIGNAL COMPANY

ROCHESTER, NEW YORK

Printed in U. S. A.

A-1676

June 1963

GENERAL INFORMATION

The incandescent lamps shown on the following pages have been arranged into three classifications, namely:

1. Page 4 shows lamps for light signals and electric semaphore lamps, using single contact candelabra bayonet bases.
2. Page 6 shows rebased lamps for light signals.
3. Page 8 shows lamps for indicating purposes and other miscellaneous applications, equipped with various types of bases.

Railway signal lamps are rated in volts and either watts or amperes. All performance data tabulated is based upon operation at rated volts.

A brief explanation of the terms used in connection with incandescent lamps is given below:

Bulb Shapes—The shapes of lamp bulbs are designated by letter as illustrated below, and the number following the letter indicates the maximum diameter in eighths of an inch.

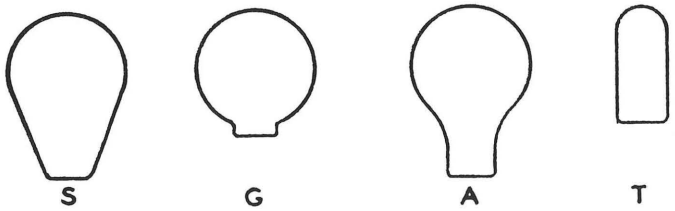

Examples: S-11 $= \frac{11}{8} = 1\frac{3}{8}$" diameter

G-16½ $= \frac{16\frac{1}{2}}{8} = 2\frac{1}{16}$" diameter

All bulbs are clear glass unless otherwise stated

Filament Form—These are designated by a prefix letter, a number and sometimes a suffix letter, such as S-1 or C-2V. The prefix letter indicates whether the wire is (S) straight, (C) coiled, or (CC) coiled coil; the number indicates the arrangement of the filaments on the supports, and the suffix letter "R" or "V" indicates whether the filament is rounded or "V" shape. Two identical filaments in multiple have a prefix "2" such as 2C-2V. "Inv." means the filament is inverted from its usual position of mounting.

Lamps illustrated on the following pages show only typical filament forms for each figure. Consult tabulation for exact filament form supplied with rating selected.

The filament forms are shown below.

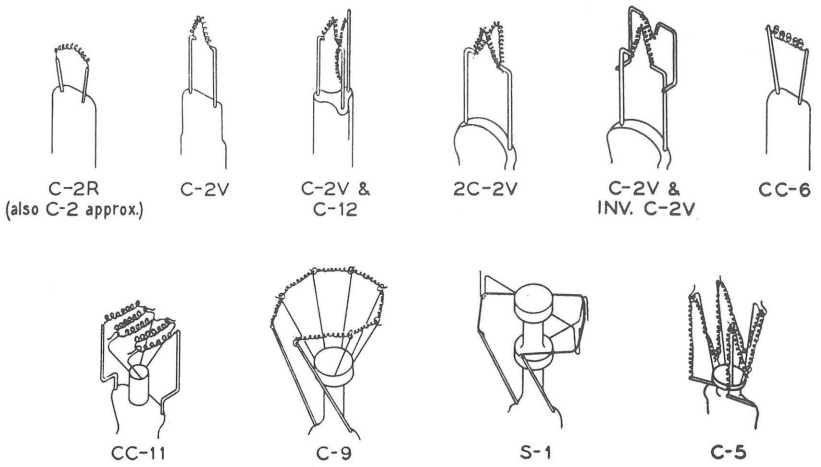

Filament Precision — This term represents the maximum variation in light center length and axial alignment in inches ±.

Light Center Length — This term represents the distance from the center of the light source to the point shown below for the base used:

(a) Screw Base — Bottom of base contact (not including solder)

(b) Bayonet and Rebased Types — Top of base pins

Pretested Lamps — The General Railway Signal Company subjects each light signal lamp to an exacting testing procedure to ensure that the filament position of each lamp in relation to its base pins is in accordance with GRS precision lamp specifications. We stamp the base of each lamp meeting these specifications, "Tested by GRS". Ordinary run-of-production lamps are not satisfactory replacements in the precisely focused optical systems of GRS light signals. Only a pretested lamp can ensure proper intensity and focus of the signal beam.

This does not apply to lamps for control panels, lever lamps, illuminated diagrams, etc., as precise focus is not important in such applications.

HOW TO ORDER

Order lamp and give catalog number and quantity.

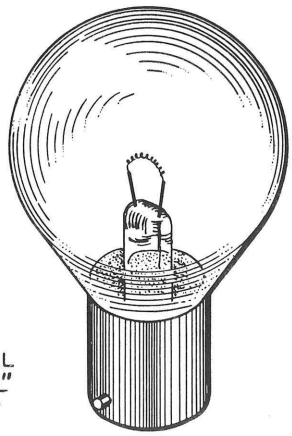

MAX. OVER-ALL LENGTH – $2\frac{3}{8}$"

A

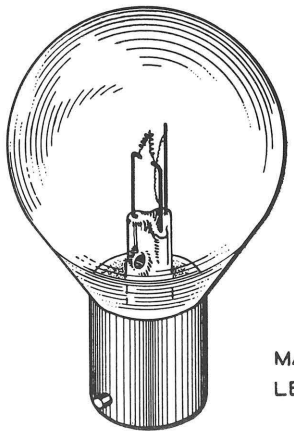

MAX. OVER-ALL LENGTH – $2\frac{3}{8}$"

B

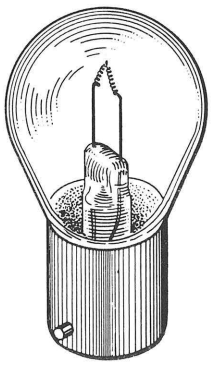

MAX. OVER-ALL LENGTH – 2"

C

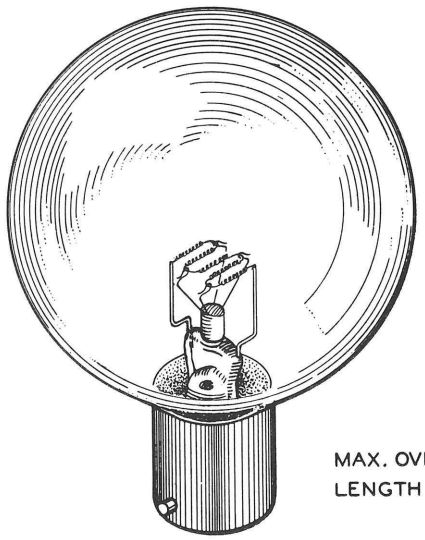

MAX. OVER-ALL LENGTH – 3"

D

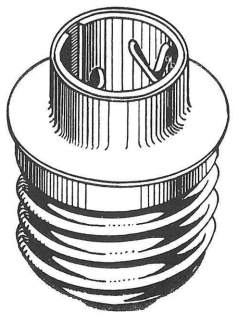

E

Incandescent Lamps—S.C. Bayonet Base

INCANDESCENT LAMPS

With Single Contact Candelabra Bayonet Bases For Color-Light Signals and Semaphore Lamps

See general information on pages 2 and 3.
The list shown below includes lamps for use with the following types of signals:

Searchlight Type Signals and Marker Lights
Types D, FA, G, MD, ME, MF, and W Color-Light Signals
Types XC and XD Highway Crossing Signals
Types U, VA and VB Color-Position-Light Signals
Electric Semaphore Lamps
Electric Switch Lamps
Cab Signals
Electric Switch Locks

SINGLE CONTACT CANDELABRA BAYONET BASES (2 Pin)

REF.	RATING			BULB SHAPE	FILAMENT			AVERAGE LIFE IN HOURS	CATALOG NUMBER
	VOLTS	AMPS.	WATTS		FORM	PRECISION	LIGHT CENTER LENGTH		
A	8	—	5	S-11	C-2V	1/64″	1¼″	1000	A46-100
A1	"	—	18	"	CC-6	"	"	"	A46-101
A3	10	—	5	"	C-2R	"	"	"	A46-103
A4	"	—	10	"	"	"	"	"	A46-104
A5	"	—	18	"	CC-6	"	"	"	A46-105
A6	"	—	25	"	CC-6	"	"	"	A46-106
A7	11	—	11	"	C-2V	"	"	2500	A46-107
A8	13.5	—	17	"	"	"	"	2000	A46-108
B	10	—	5+3.5	"	C-2V & C-12	"	"	1000	A46-121
B1	"	—	13+3.5	"	"	"	"	"	A46-122
B2	"	—	18+3.5	"	CC-6 & C-12	"	"	"	A46-124
C	3.5	.12	—	S-8	C-2R	2/64″	1¼″	1000	A46-130
C1	"	.30	—	"	"	"	"	"	A46-131
C2	8	.25	—	"	"	"	"	"	A46-132
C3	10	"	—	"	"	"	"	"	A46-133
C4	12	"	—	"	"	"	"	"	A46-134
C5	13.5	"	—	"	"	"	"	"	A46-135
C6	11.3	—	13.3	"	CC-6	"	"	"	A46-136
D*	120	—	25	G-16½	CC-11	"	"	"	A46-145
D1†	"	—	"	"	C-5	4/64″	"	"	A46-146
D2	10	—	40	"	CC-6	1/64″	"	"	A46-147
E	Adapter, for mounting two-pin candelabra bayonet base lamp in medium screw base receptacle.								A46-160

**Horizontal burning* †*Vertical burning*

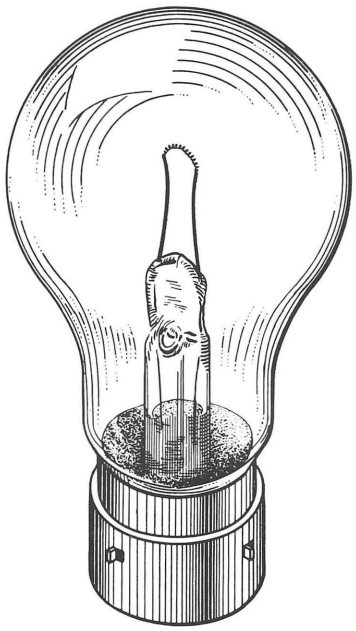

MAX. OVER-ALL LENGTH - $3\frac{3}{4}$"

A

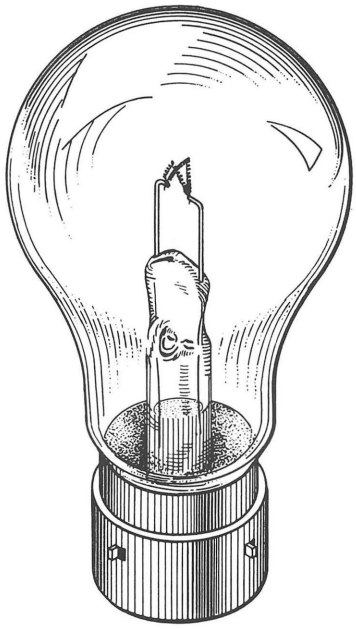

MAX. OVER-ALL LENGTH - $3\frac{3}{4}$"

B

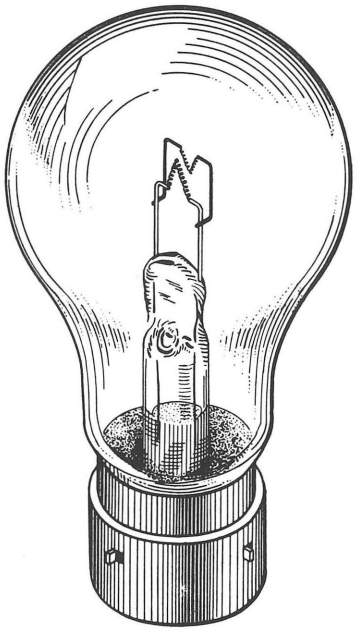

MAX. OVER-ALL LENGTH - $3\frac{3}{4}$"

C

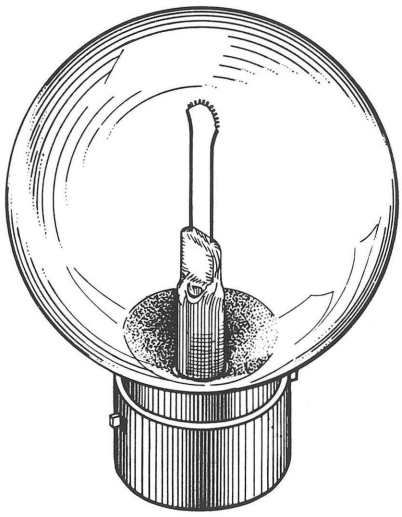

MAX. OVER-ALL LENGTH - $3\frac{1}{8}$"

D

Incandescent Lamps—Special Rebased Type

INCANDESCENT LAMPS

For Color-Light Signals
Special Rebased Type

See general ordering information on pages 2 and 3.
These lamps are used with the following:

Types D, E, F, G, and Doublet Lens Color-Light Signals
Type B Position-Light High Signals (Fig. D only)

REBASED SINGLE FILAMENT—3 PIN

REF.	RATING		BULB SHAPE	FILAMENT			AVERAGE LIFE IN HOURS	CATALOG NUMBER
	VOLTS	WATTS		FORM	PRECISION	LIGHT CENTER LENGTH		
A	8	10	A-15	C-2R	1/64″	2 3/16″	1000	A46-170
A2	10	18	"	CC-6	"	"	"	A46-172
A3	"	40	"	C-2V	"	"	1500	A46-173
A4	120	30	"	C-5	"	"	"	A46-174

REBASED DOUBLE FILAMENT—3 PIN

B	10	18	A-15	2C-2V	1/64″	2 3/16″	1500	A46-181
B1	"	40	"	"	"	"	"	A46-182

REBASED MAJOR AND MINOR FILAMENTS—3 PIN

C	8	18+3.5	A-15	C-2V & Inv. C-2V	1/64″	2 3/16″	1500*	A46-190
C1	10	"	"	CC-6 & CC-6	"	"	" *	A46-191

REBASED SINGLE FILAMENT—2 PIN

D	12	9	G-16½	C-2R	1/64″	1.91″†	1500	A46-196

**Rating of major filament only.* *†From top of pins to top of filament.*

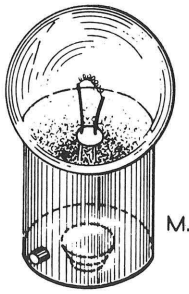

M.O.L.– $1\frac{7}{16}$″

A

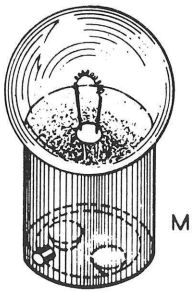

M.O.L.– $1\frac{7}{16}$″

B

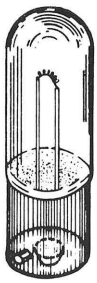

M.O.L.– $1\frac{3}{16}$″

C

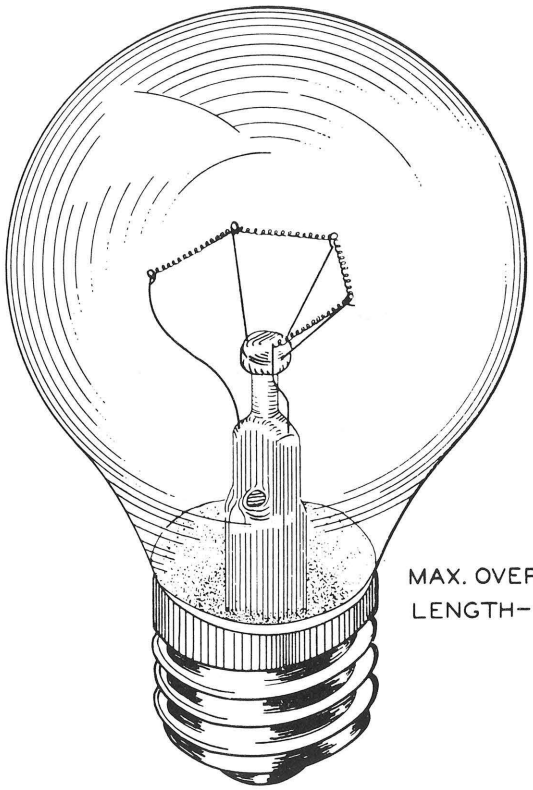

MAX. OVER-ALL LENGTH– $3\frac{15}{16}$″

D

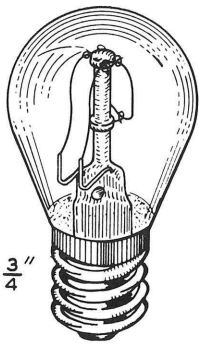

M.O.L. $1\frac{3}{4}$″

E

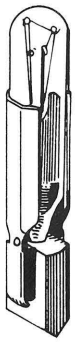

M.O.L.– $1\frac{11}{16}$″

F

INCANDESCENT LAMPS

For Indicating Purposes and For Electric Semaphore Lamps

See general information on pages 2 and 3.
The list shown below includes lamps for use with the following devices:

cTc Control Machines
NX Control Machines
Lever Lights in Interlocking Machines
Illuminated Track Indicators and Diagrams
Electric Semaphore Lamps, etc.

REF.	RATING			REMARKS	TYPE OF BASE	BULB SHAPE	FILAMENT		AVERAGE LIFE IN HOURS	CATALOG NUMBER
	VOLTS	AMPS. OR CANDLE-POWER	WATTS				FORM	LIGHT CENTER LENGTH		
A	6-8	3 C.P.	—	—	S.C. Bay. Cand.	G-6	C-2R	¾″	1000	A46-200
A1	12-16	4 C.P.	—	—	S.C. Bay. Cand.	"	"	13/16″	1000	A46-201
A2	"	6 C.P.	—	—	S.C. Bay. Cand.	"	"	¾″	750	A46-202
A3	18-24	3 C.P.	—	—	S.C. Bay. Cand.	"	C-2V	"	200	A46-203
B	12-16	4 C.P.	—	—	D.C. Bay. Cand.	"	C-2R	13/16″	1000	A46-210
C	12.3	.14	—	—	Min. Bay.	T-3¼	C-2V	⅝″	"	A46-215
D	120	—	25	Inside Frosted	Med. Screw	A-19	C-9	2½″	1000	A46-225
E	60	—	10	—	Min. Screw	S-8	C-17	—	—	A46-230
F	4	.17 to .21	—	Mfgr. 4A	Slide	T-2	C-6	—	1500	A46-235
F1	12	.09 to .11	—	" 12A	"	"	C-21	—	1000	A46-236
F2	"	.15 to .190	—	" 12C	"	"	"	—	"	A46-237
F3	16	.09 to .11	—	" 16A	"	"	"	—	"	A46-238
F4	24	.032 to .038	—	" 24E	"	"	C-2F	—	"	A46-239
F5	"	.09 to .11	—	" 24D	"	"	C-21	—	"	A46-240
F7	35	.060 to .085	—	" 35B	"	"	C-5	—	"	A46-242
F8	"	.035 to .045	—	" 35A	"	"	"	—	"	A46-243
F9	30	.065 to .085	—	" 30A	"	"	C-21	—	"	A46-244

Memoranda

CATALOG SECTION 50

Model 10 Direct-Current Electric Switch Lock

Forced Drop

CONTENTS

	Page
General Description	23
Ordering Information	23
Lock only	28
Locks with fittings to adapt to specific switch stands, to lock normal only	25
Conduit and fittings	26

GENERAL RAILWAY SIGNAL COMPANY
A UNIT OF GENERAL SIGNAL CORPORATION
ROCHESTER, NEW YORK

PRINTED IN U.S.A.

December 1965

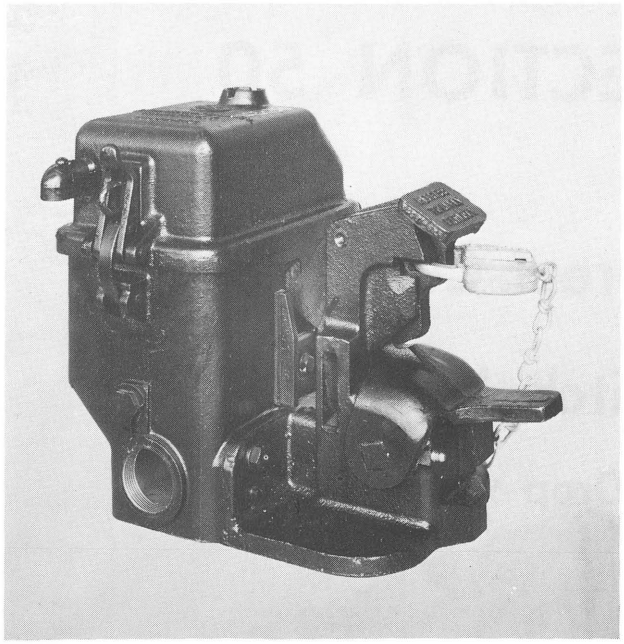

Model 10 electric switch lock in normally locked position.

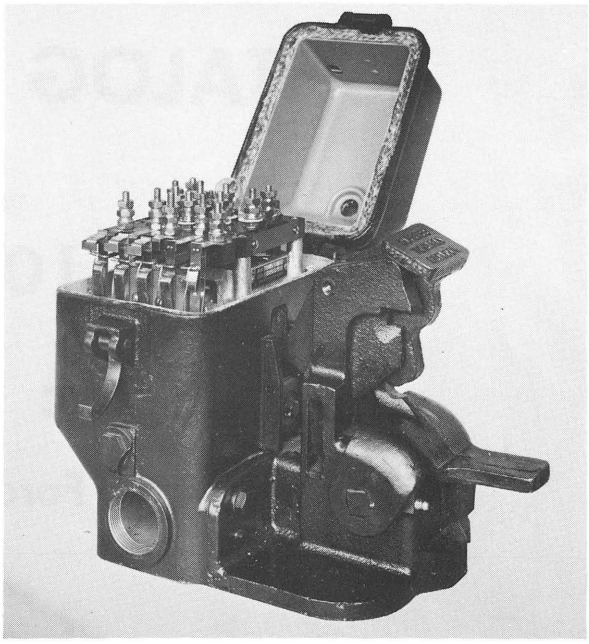

Model 10 electric switch lock with maintainer's cover opened showing contacts and easily accessible wiring terminals.

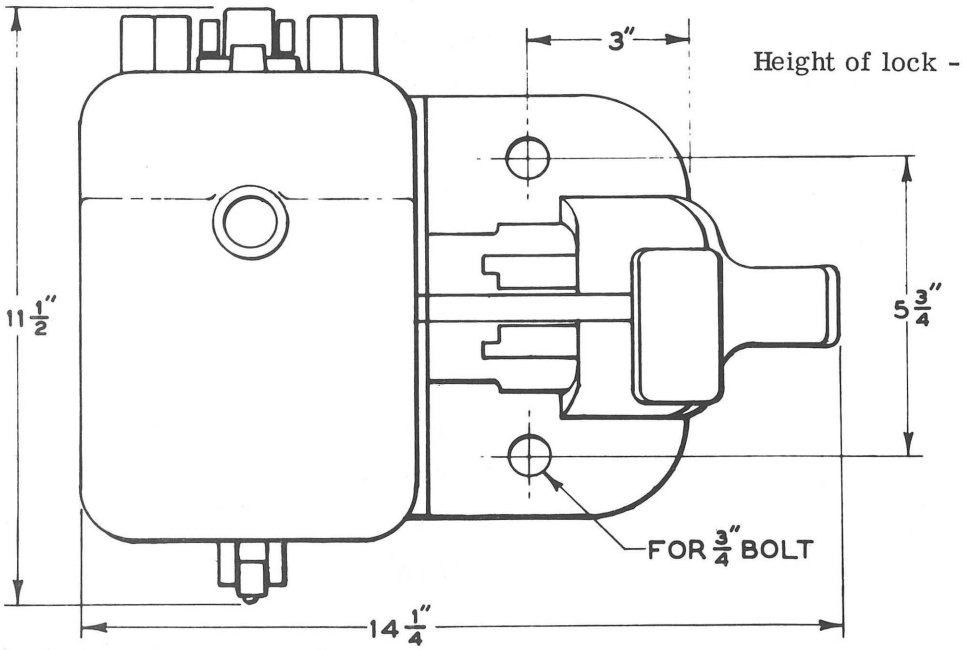

Dimension diagram.

MODEL 10 DIRECT-CURRENT ELECTRIC SWITCH LOCK
Forced Drop

GENERAL DESCRIPTION

The Model 10 lock is used to lock the hand-throw lever of a ground-throw switch stand or a GRS Model 9 hand-operated switch machine.

As listed on page 24, the Model 10 lock is furnished arranged to lock the hand-throw lever in its normal position only.

The Model 10 lock operates on 8-12 volts d.c, (100 ohms). If ac operation is required, it can be operated from a rectifier. There are five independent contacts, three actuated mechanically by removal of the switchman's padlock and two operated electrically. The three choices of contact arrangements are shown in Figures 1, 2, and 3 page 24. The lock has an emergency release with latch-out feature, which cannot be operated until the switchman's padlock is removed. Provision is made for sealing the emergency release.

Locks are offered complete with all parts to fit switch stands as listed. The lever guide is fitted with two 1/8" thick shims for 3/4" thick hand-throw lever. One of these shims should be removed when 7/8" thick hand-throw lever is used and both shims should be removed when 1" thick hand-throw lever is used.

For more detailed description, see Bulletin 187. Installation details are given in Handbook 31.

ORDERING INFORMATION

Locks with fittings to adapt to specific latch stands are listed on pages 24 and 25 according to the switch stands they are designed to fit. These locks include your choice of wire entrance coupling (for either flexible or solid rubber conduit) and a single contact, candelabra bayonet base lamp, bulb shape S-11 or S-8, as you may specify from Catalog Section 46.

NOTE: If you do not find your switch stand listed on pages 24 and 25, please let us know manufacturer's name and model number, and we shall be glad to advise whether Model 10 lock can be applied.

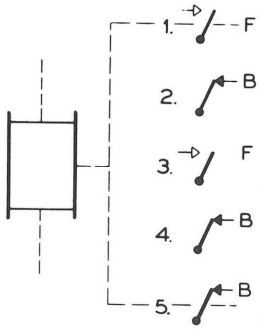

Figure 1

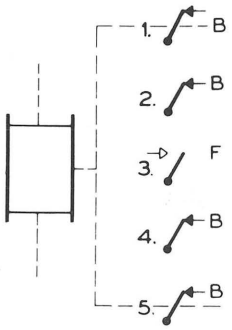

Figure 2

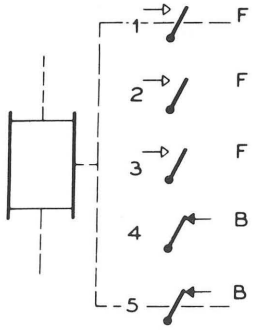

Figure 3

Contact arrangements available with Model 10 electric switch lock. Contacts are shown with switch locked in normal position. Contacts 1 and 5 are actuated by energization of the lock-magnet coils. Contacts 2, 3, and 4 are actuated whenever the padlock is removed.

MODEL 10 ELECTRIC SWITCH LOCKS WITH FITTINGS TO ADAPT TO SPECIFIC SWITCH STANDS

TO LOCK SWITCH STAND IN ONE POSITION ONLY - R-H or L-H.

NOTE: See ordering information on page 23.

To order, specify "Model 10 Lock" and give catalog number. Lock includes your choice of lamp bulb. Specify catalog number of lamp you wish (S8 or S11 bulb shape) from Catalog Section 46.

MODEL 10 LOCK, WITH ALL PARTS REQUIRED TO FIT THE FOLLOWING:	CONTACT ARRANGEMENT (See illustrations above)	CATALOG NUMBER	
		WITH FITTING FOR 1-1/2" FLEX. CONDUIT*	WITH FITTING FOR 1-7/8" I. D. RUBBER CONDUIT*
GRS Model 9 Switch Machine	Figure 1	A50-420	*NOTE: A50-420 THRU A50-422 INCLUDE CONDUIT AS WELL AS CONDUIT FITTINGS.*
	Figure 2	A50-421	
	Figure 3	A50-422	
Bethlehem 51A ("New Century")	Figure 1	A50-495	A50-442
	Figure 2	A50-496	A50-443
	Figure 3	A50-497	A50-424
Bethlehem 53A	Figure 1	A50-445	A50-447
	Figure 2	A50-446	A50-448
	Figure 3	A50-425	A50-426
Cleveland Odenkirk	Figure 1	A50-450	A50-452
	Figure 2	A50-451	A50-453
	Figure 3	A50-427	A50-428
Ramapo (Racor) 109 or 110	Figure 1	A50-455	A50-457
	Figure 2	A50-456	A50-458
	Figure 3	A50-429	A50-430

* Conduit fittings and fastenings are furnished as required to fit each specific switch stand. To order conduit, see page 26.

MODEL 10 ELECTRIC SWITCH LOCKS WITH FITTINGS TO ADAPT TO SPECIFIC SWITCH STANDS

TO LOCK SWITCH STAND IN ONE POSITION ONLY. - R-H or L-H.

NOTE: See ordering information on page 23.

To order, specify "Model 10 Lock" and give catalog number. Lock includes your choice of lamp bulb. Specify catalog number of lamp you wish (S8 or S11 bulb shape) from Catalog Section 46.

MODEL 10 LOCK, WITH ALL PARTS REQUIRED TO FIT THE FOLLOWING:	CONTACT ARRANGEMENT (See illustrations on page 24)	CATALOG NUMBER	
		WITH FITTING FOR 1-1/2" FLEX. CONDUIT*	WITH FITTING FOR 1-7/8" I. D. RUBBER CONDUIT*
Pettibone Mulliken 4	Figure 1	A50-460	A50-462
	Figure 2	A50-461	A50-463
	Figure 3	A50-431	A50-432
Pettibone Mulliken 5	Figure 1	A50-465	A50-467
	Figure 2	A50-466	A50-468
	Figure 3	A50-433	A50-434
Ramapo Ajax 26E	Figure 1	A50-470	A50-472
	Figure 2	A50-471	A50-473
	Figure 3	A50-435	A50-436
Ramapo Ajax 36D	Figure 1	A50-476	A50-478
	Figure 2	A50-477	A50-479
	Figure 3	A50-437	A50-438
Ramapo Ajax 36H	Figure 1	A50-480	A50-482
	Figure 2	A50-481	A50-483
	Figure 3	A50-439	A50-444
Ramapo (Racor) E1419	Figure 1	A50-485	A50-487
	Figure 2	A50-486	A50-488
	Figure 3	A50-449	A50-454
Rapro	Figure 1	A50-490	A50-492
	Figure 2	A50-491	A50-493
	Figure 3	A50-459	A50-464

* Conduit fittings and fastenings are furnished as required to fit each specific switch stand. To order conduit, see page 26.

MODEL 10 ELECTRIC SWITCH LOCK ONLY

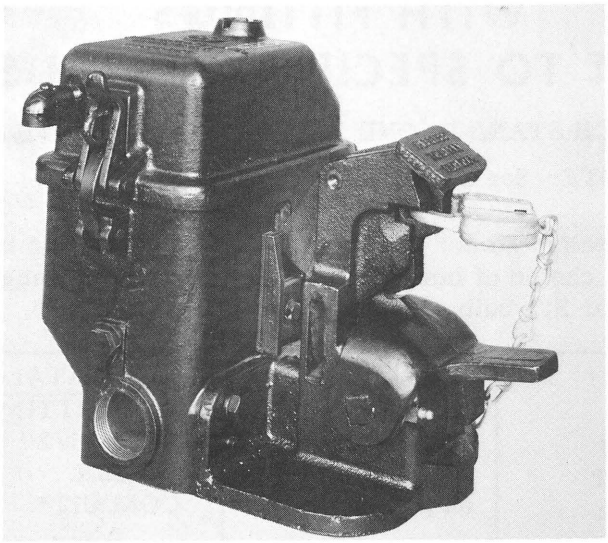

NOTE: See ordering information on page 23.

To order, specify "Model 10 Lock", and give catalog number. Lock includes your choice of lamp bulb. Specify catalog number of lamp you wish (S8 or S11 bulb shape) from Catalog Section 46.

CONTACT ARRANGEMENT (See illustrations on page 24)	CATALOG NUMBER For Single Lock
Figure 1	A50-400
Figure 2	A50-401
Figure 3	A50-402

CONDUIT AND FITTINGS

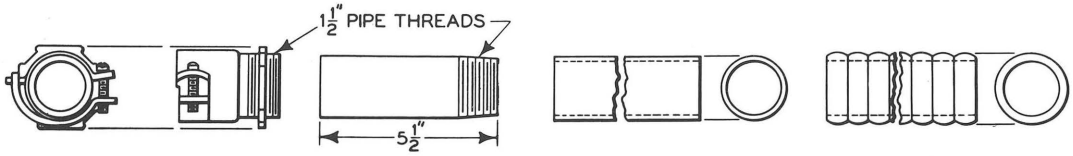

Order by catalog number and name shown in bold type

REF.	NAME	CATALOG NUMBER
A	COUPLING, 1-1/2" pipe thread for 1-1/2" flexible conduit	A85-866
B	PIPE NIPPLE, 1-1/2" pipe thread for 1-7/8" I. D. rubber conduit .	A85-867
C	CONDUIT, 1-7/8" I. D., solid rubber, length 3'	A85-520
D	CONDUIT, 1-1/2" flexible, length 3'	A85-868

CATALOG SECTION 50

Spring Switch Lock

CONTENTS

	Page
Detector Rods	52
Lamp Tip	52
Lock Rod	52
Lugs	50
Spring Switch Lock Layout	46
Spring Switch Lock	48
Marker	52
Target Staffs	52
Wire Entrance Coupling and Conduit	50
General Description	42

Parts lists are available on request

GENERAL RAILWAY SIGNAL COMPANY

ROCHESTER, NEW YORK

Printed in U. S. A.

NOVEMBER 1959

Spring Switch Lock

GENERAL DESCRIPTION

The GRS spring switch lock gives you all the facilities of a spring switch and also provides: (1) full facing point protection with complete circuit-controller check of both locking and point position; (2) automatic unlocking for trailing moves; and (3) a built-in hand-throw mechanism with high mechanical advantage for easy operation. Operation, installation, and maintenance are covered in Handbook 66.

Many parts of the GRS spring switch lock are interchangeable with those of the GRS Model 9 hand-operated switch machine. This feature helps reduce spare parts inventory.

The built-in circuit controllers are available in two arrangements, "dual-normal" and "dual-normal and reverse". The dual-normal controller checks that the switch points are in proper position and also provides for individual detection of overlocked and underlocked conditions. This permits individual control of signals governing facing and trailing moves, so that mainline moves in either direction - but not trailing moves from the siding - may be made with the switch overlocked; and trailing moves - but not facing moves - may be made with the switch underlocked. The "dual-normal and reverse" arrangement provides the same facilities and also provides for detection of switch point position when the switch is hand-thrown to the reverse position.

Circuit controllers are designed to respond to the standard 1/4-inch obstruction requirement. In addition, the circuit controller mechanism - both the "dual-normal" and the "dual-normal and reverse" - also has a latchout feature. If the point-detector rod is moved 3/8 inch or more from its normal position when the locking plunger is not withdrawn from the lock rod, the normal contacts will go to their unlocked position and will remain there until they are manually reset.

As shipped, dual-normal circuit controllers have one normally open and one normally closed independent contact on the "overlocked" section and same on the "underlocked" section. Reverse controller is shipped with two open and two closed. All contacts are designed so they can be rearranged in the field, if desired.

The spring switch lock is listed without target staff. A domed cap covers the upper end of the throw crank shaft. A collar is attached to this shaft by a pin. Either low or high target staff may be added to the spring switch lock. Remove the cap, pin, and collar and replace them with a complete target staff assembly, which includes drive coupling and driven coupling, adjustable for proper alignment.

The latch rod, which is installed in the field, is furnished with the spring switch lock. If the hand-throw lever is operated toward the normal position and is not fully seated in the latch stand, the latch rod will hold up the latch in the latch stand. This prevents the insertion of a padlock. Full throw of the hand-throw lever to the normal position before padlocking is thus ensured.

Wire entrance is through a 1-1/2 inch pipe-tapped hole on the circuit-controller end of the machine.

RIGHT-HAND OR LEFT-HAND LAYOUTS

Spring switch locks may be ordered for either right- or left-hand installation, on the open- or closed-point side. A right-hand layout is one located on the right-hand side of the track when facing the switch points.

The same switch lock serves for all layouts with a rearrangement of the hand-throw mechanism and release linkage. Change-over from an open-point to a closed-point application or vice versa requires a different detector rod and release crank. See page 52.

ROLLER BEARING

At least one roller bearing should be installed in the layout if the switch points are 20 feet or more in length. The roller bearing is described in detail in GRS Publication D53. 1001. To order, see Catalog Section 91.

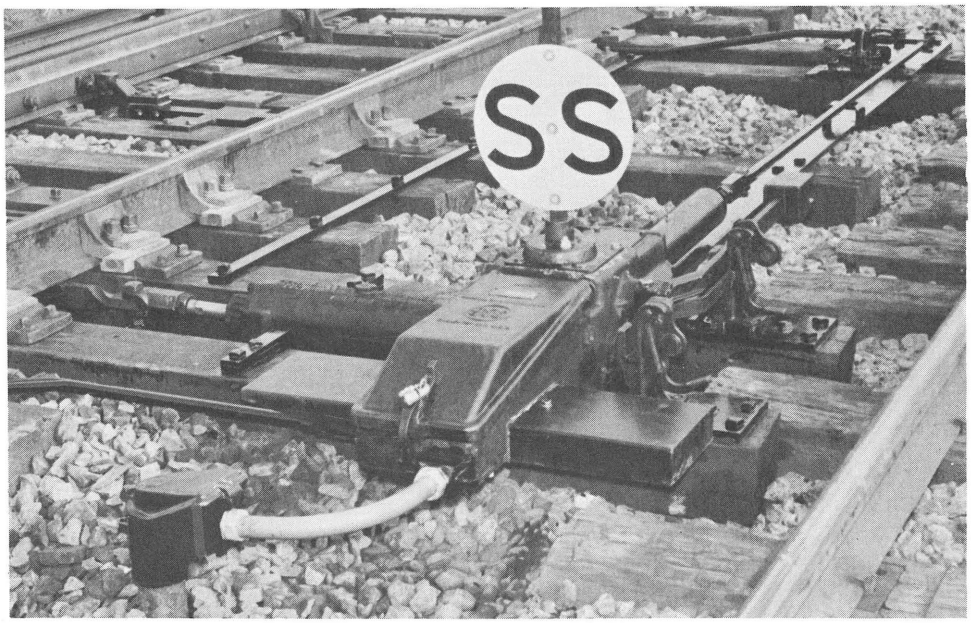

Typical spring switch installation.
Low target staff with "SS" marker is optional equipment.

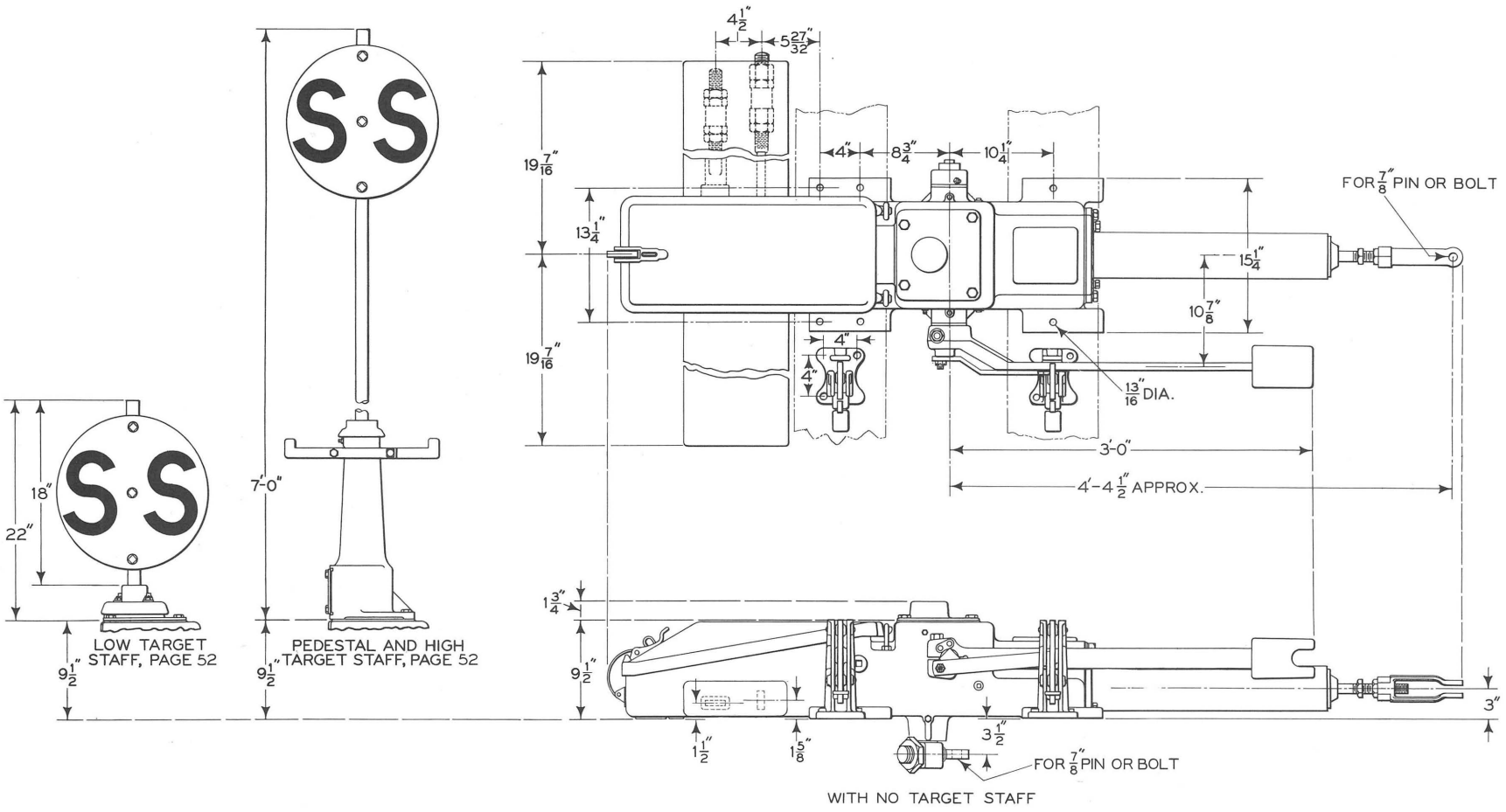

General dimensions.

Memoranda

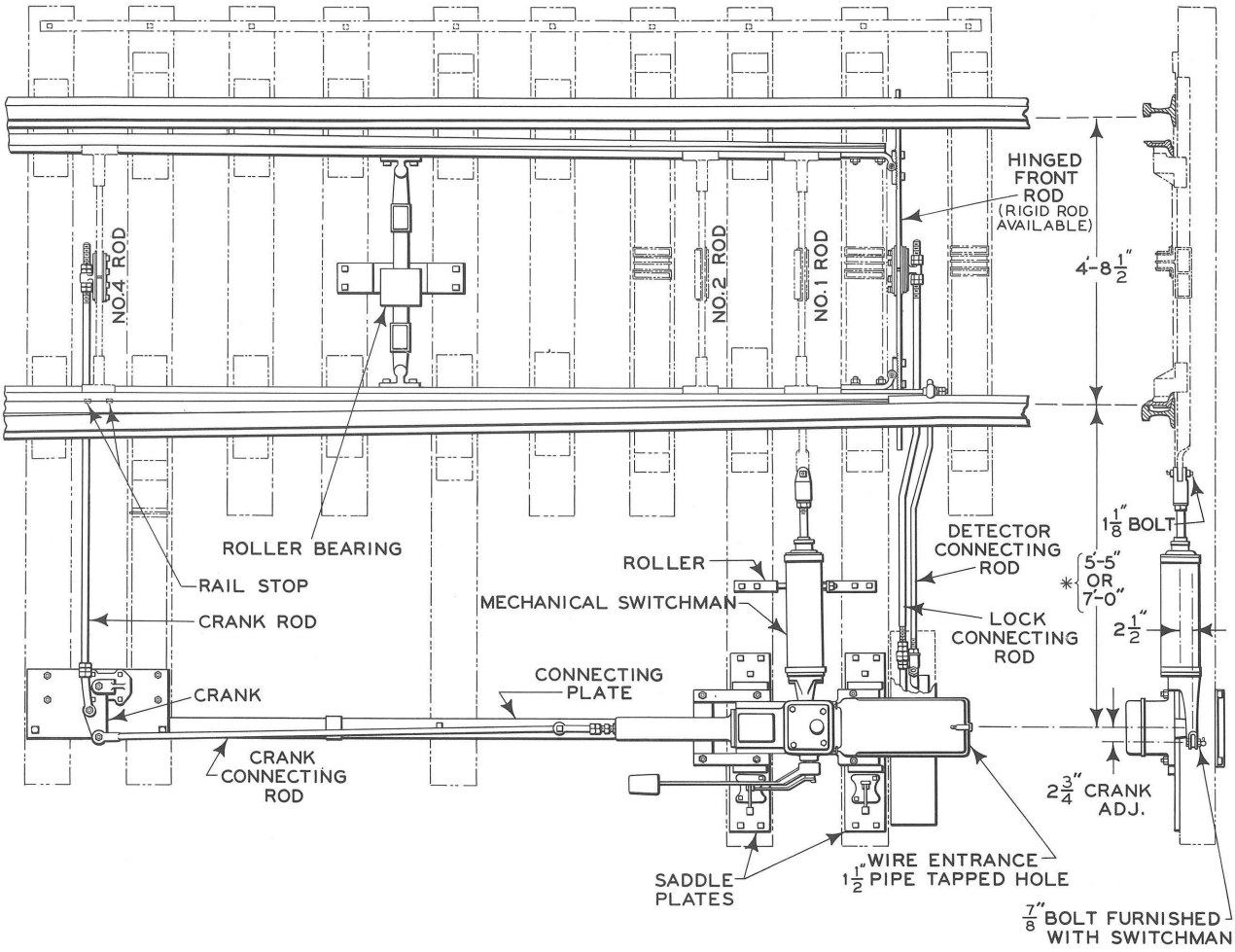

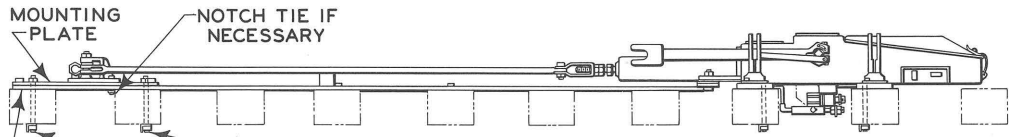

* {5'-5" FOR NO MARKER AND LOW MARKER. 7'-0" FOR HIGH MARKER.

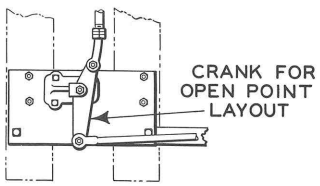

Spring switch lock layout.

SPRING SWITCH LOCK LAYOUT

To order, specify "Spring Switch Lock Layout", giving catalog number. Your choices of lugs A through F, page 50, are included with each lock. Please specify lug choices by catalog numbers.

IMPORTANT: Please send a drawing of the switch layout so we can supply you a lock exactly fitted to your switch. This drawing should include switch point drilling.

The Spring Switch Lock Layout comprises:

1. Spring switch lock with your choice of lock and detector rod lugs.
2. Latch stands.
3. Lock connecting rod complete.
4. Detector connecting rod complete.
5. Mechanical Switchman with roller.
6. Connecting plate, and crank with mounting plate and spacer plate.
7. Crank connecting rod and crank rod complete.
8. Rail stop.

LOCK LAYOUT	POINT POSITION	CONTROLLER	CATALOG NUMBER
Right Hand	Closed	Dual-normal	A50-700
Left Hand	Open	Dual-normal	A50-703
Right Hand	Open	Dual-normal	A50-705
Left Hand	Closed	Dual-normal	A50-707
Right Hand	Closed	Dual-normal & Reverse	A50-720
Left Hand	Open	Dual-normal & Reverse	A50-723
Right Hand	Open	Dual-normal & Reverse	A50-725
Left Hand	Closed	Dual-normal & Reverse	A50-727

ORDER THE FOLLOWING ITEMS SEPARATELY, AS NEEDED.

1 - Wire entrance couplings and conduit, page 50.
2 - Target staffs, marker and lamp tip, page 52.
3 - Saddle plates, page 52.
4 - Roller bearing, front rods, point lugs and junction boxes, Catalog Section 91.
5 - Mounting bolts, Catalog Section 3.

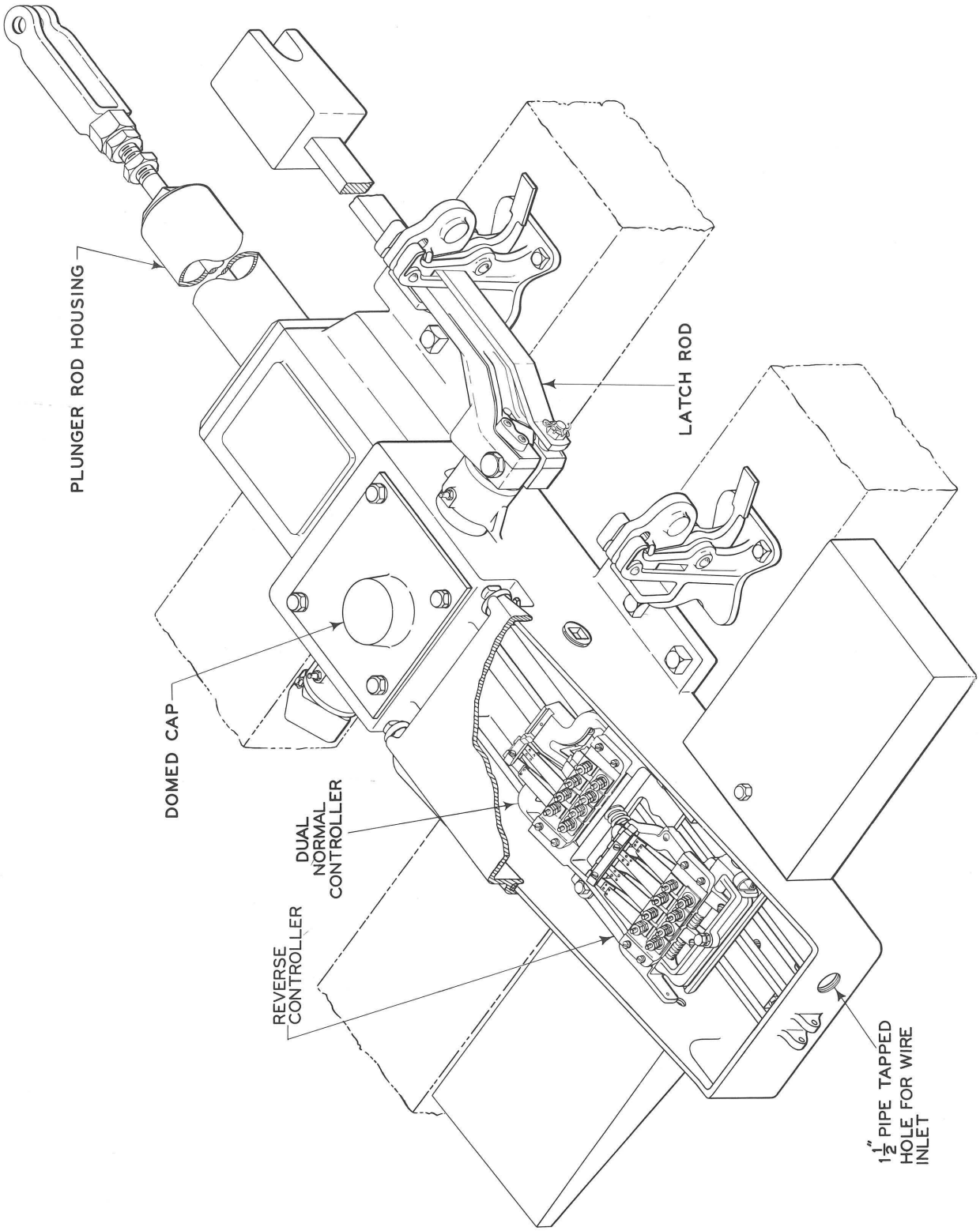

Spring switch lock only.

SPRING SWITCH LOCK

To order, specify "Spring Switch Lock", giving catalog number. Your choices of lugs A through F, page 50, are included with each lock. Please specify lug choices by catalog numbers.

LOCK LAYOUT	POINT POSITION	CONTROLLER	CATALOG NUMBER
Right Hand	Closed	Dual-normal	A50-750
Left Hand	Open	Dual-normal	A50-753
Right Hand	Open	Dual-normal	A50-755
Left Hand	Closed	Dual-normal	A50-757
Right Hand	Closed	Dual-normal & Reverse	A50-770
Left Hand	Open	Dual-normal & Reverse	A50-773
Right Hand	Open	Dual-normal & Reverse	A50-775
Left Hand	Closed	Dual-normal & Reverse	A50-777

ORDER THE FOLLOWING ITEMS SEPARATELY, AS NEEDED:

1 - Wire entrance couplings and conduit, page 50.
2 - Target staffs, marker and lamp tip, page 52.
3 - Mounting bolts, Catalog Section 3.

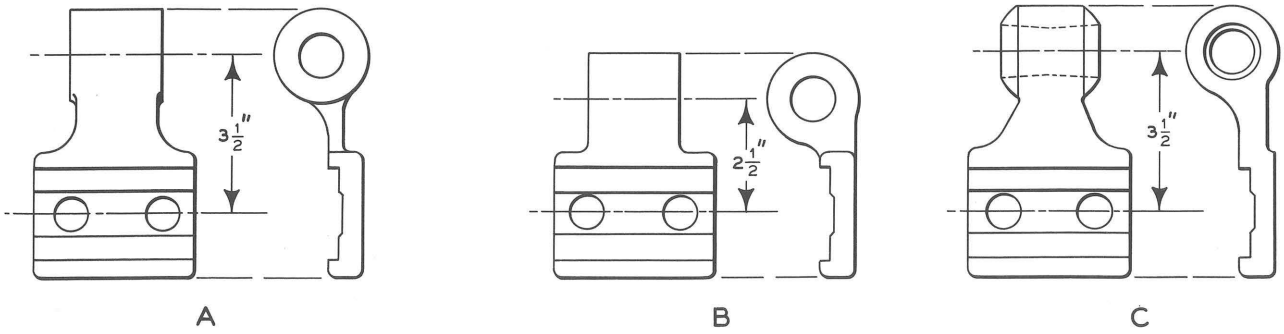

LOCK ROD LUGS

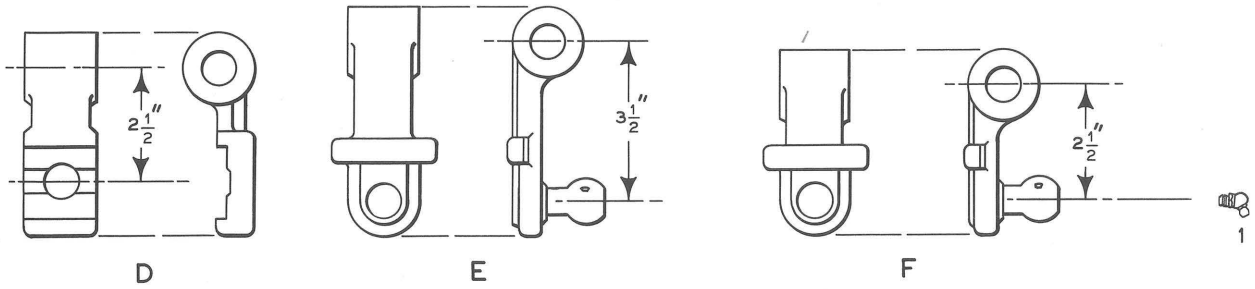

DETECTOR ROD LUGS

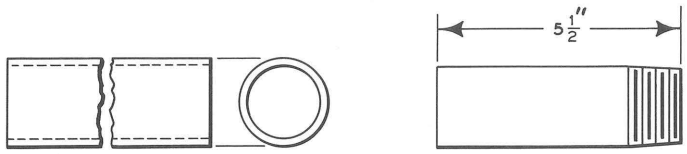

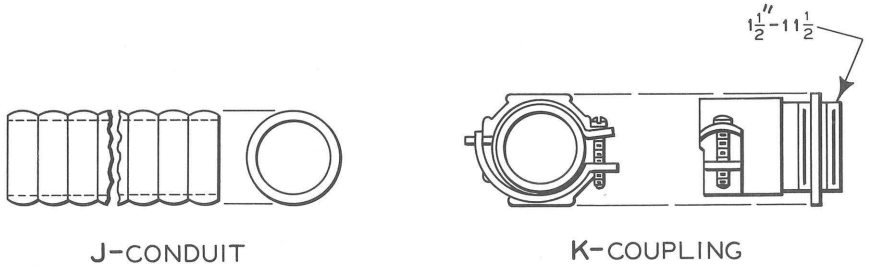

Accessories for spring switch lock.

ACCESSORIES FOR SPRING SWITCH LOCK

Order by catalog number and name shown in bold type

REF.	NAME	CATALOG NUMBER
	THE FOLLOWING ITEMS ARE FURNISHED WITH LOCK LAYOUTS LISTED ON PAGE 47, AND LOCKS ONLY, PAGE 49, BUT ARE SHOWN HERE FOR YOUR SELECTION OF ONE LOCK ROD LUG AND ONE DETECTOR ROD LUG.	
A	LUG, 3-1/2" spacing, for lock rod	A85-560
B	LUG, 2-1/2" spacing, for lock rod	A85-561
C	LUG, 3-1/2" spacing, swivel type, for lock rod, includes cup nuts.	A85-562
D	LUG, 2-1/2" spacing, for 1" dia. detector rod	A87-179
E	LUG, 3-1/2" spacing, for 1" dia. detector rod	A87-181
F	LUG, 2-1/2" spacing, for 1" dia. detector rod	A87-185
	THE FOLLOWING ITEMS ARE NOT FURNISHED WITH LOCK LAYOUTS LISTED ON PAGE 47 AND LOCKS ONLY, PAGE 49, AND SHOULD BE ORDERED SEPARATELY AS NEEDED.	
G	CONDUIT, 1-7/8" I. D., solid rubber, length 3'	A85-520
H	PIPE NIPPLE, 1-1/2" pipe thread for 1-7/8" I. D. rubber conduit . .	A85-867
J	CONDUIT, 1-1/2" flexible, length 3'.	A85-868
K	COUPLING, 1-1/2" pipe thread for 1-1/2" flexible conduit	A85-866
1	GREASE FITTING, for detector lugs.	P87-101

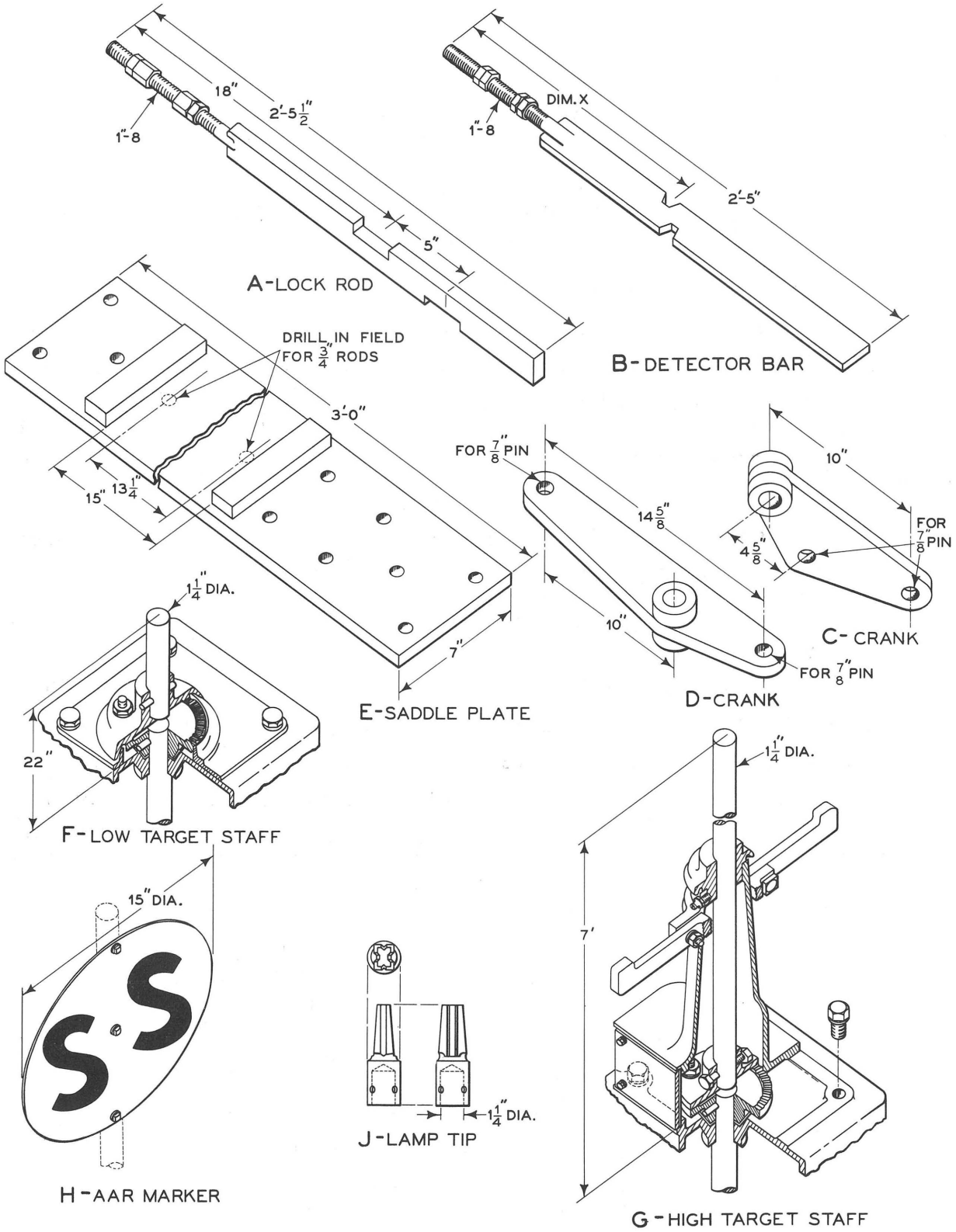

Target staffs, lock rod, detector rods, saddle plates and cranks.

TARGET STAFFS, LOCK ROD, DETECTOR RODS, SADDLE PLATES AND CRANKS

Order by catalog number and name shown in bold type

REF.	NAME	CATALOG NUMBER
	NOTE: LOCK RODS AND DETECTOR RODS ARE FURNISHED WITH LOCK LAYOUTS LISTED ON PAGE 47, AND LOCKS ONLY, PAGE 49; CRANKS ARE FURNISHED WITH LOCK LAYOUTS ONLY, LISTED ON PAGE 49. THESE ARE SHOWN HERE FOR THE PURPOSE OF CONVERTING A LOCK FROM RIGHT-HAND TO LEFT-HAND.	
A	LOCK ROD, reversible, for either open or closed point side. Order lug from page 50	A87-230
B	DETECTOR BAR, for closed point side; for right- or left-hand layout. Dimension "X"= 17". Order lug from page 50	A87-239
B1	DETECTOR BAR, for open point side; for right- or left-hand layout. Dimension "X" = 22". Order lug from page 50	A87-241
C	CRANK, for closed-point layout	A50-790
D	CRANK, for open-point layout	A50-792
	NOTE: THE FOLLOWING ITEMS ARE NOT FURNISHED WITH LOCK LAYOUTS LISTED ON PAGE 47 AND LOCKS ONLY, PAGE 49, AND SHOULD BE ORDERED SEPARATELY AS NEEDED.	
E	SADDLE PLATE, for No. 1 or 2 tie, drilled for latch stand	A50-795
F	LOW TARGET STAFF complete, 1-1/4" dia., not drilled for marker or lamp tip. Includes drive and driven couplings and all necessary hardware.	A87-250
G	HIGH TARGET STAFF complete, 1-1/4" dia., not drilled for marker or lamp tip. Includes drive and driven couplings, pedestal, and all necessary hardware. May be shortened in the field as desired	A87-253
H	MARKER, A. A. R. for low or high target staffs, complete with bolts, nuts and washers	A50-799
J	LAMP TIP, for low or high target staffs, complete with bolt, nut and washer	A87-259

Memoranda

CATALOG SECTION 53

Power Supplies for cTc Type Code Lines for Code-Repeater Locations

CONTENTS

	Page
cTc Line Energy Power Supply	3
cTc Line and Relay Energy Power Supply	4
Motor Alternators	6
Replacement Parts	5

TOOLS FOR TRANSPORTATION

GENERAL RAILWAY SIGNAL COMPANY

ROCHESTER, NEW YORK

Printed in U. S. A.

A-1808

May 1961

Power Supplies for cTc Type Code lines for Code Repeater Locations

These power supplies are for use in place of a battery in cTc type installations. They are available in two arrangements, (1) a cTc Line Energy Power Supply; and (2) a cTc Line and Relay Energy Power Supply, which has provision for also supplying energy to code-repeater relays. This second arrangement is for use at Syncroscan® and at Quiktrol® code-repeater locations.

Operation is from 110-125 volts, 50/60 cycle a-c. Maximum power consumption is approximately 135 watts. Taps on transformer units provide for required adjustments.

Motor alternators, for standby service, are listed on page 6.

For detailed description, see GRS Development Sheet D99.0501.

cTc LINE ENERGY POWER SUPPLY

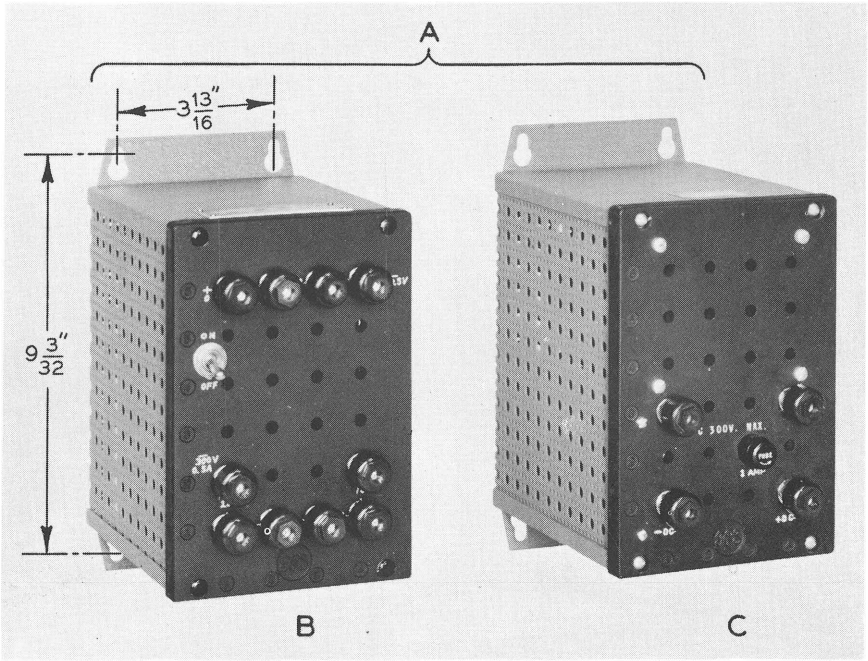

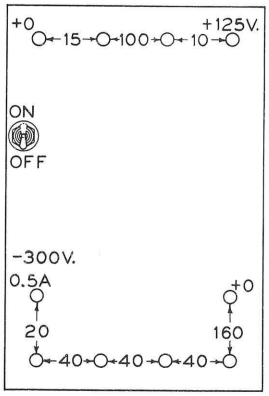

EACH UNIT
- HEIGHT - 9 13/16"
- WIDTH - 5 3/8"
- DEPTH - 8 1/8"

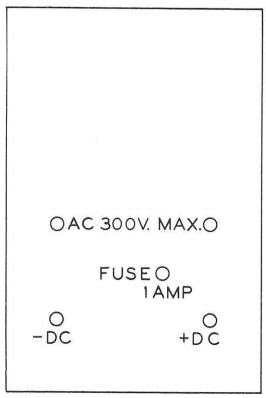

Order by catalog number and name shown in bold type

REF	NAME	CATALOG NUMBER
A	cTc LINE ENERGY POWER SUPPLY, complete with one Ref. B and one Ref. C	A53-300
B	TRANSFORMER UNIT with primary taps at 15-100 - 10 volts; secondary taps from 20 to 160 volts in 20- volt steps, and from 160 to 280 volts in 40-volt steps. An additional 20-volt step provides a maximum output of 300 volts. An ON-OFF switch is inserted in the primary leads	A53-305
C	LINE ENERGY RECTIFIER - FILTER UNIT with maximum input of 300 volts a-c and maximum d-c output of 255 volts for a 500 ma. load	A53-310

cTc LINE AND RELAY ENERGY POWER SUPPLY

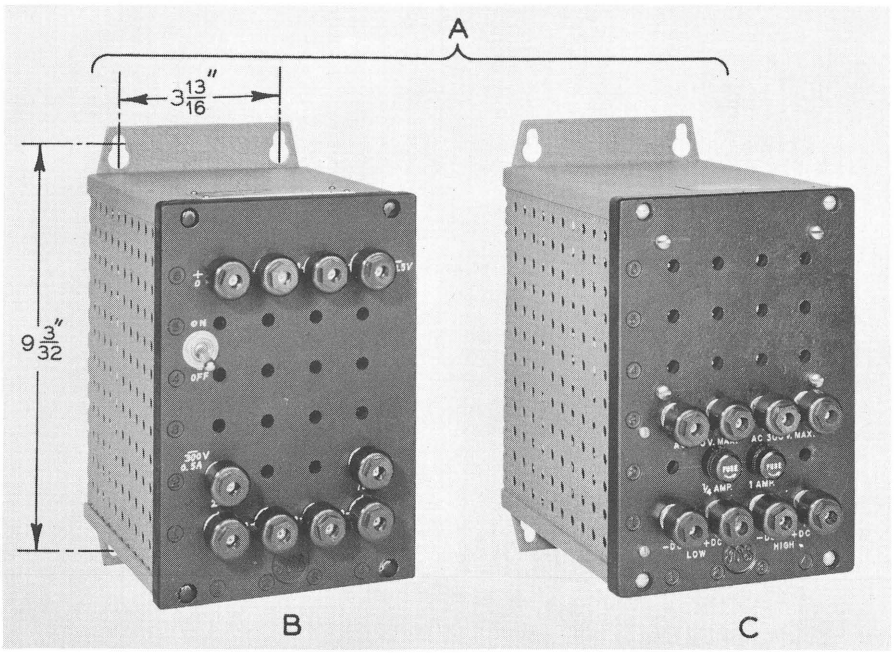

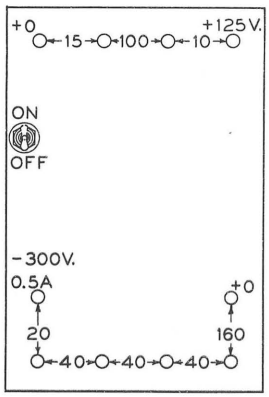

EACH UNIT
- HEIGHT - 9 13/16"
- WIDTH - 5 3/8"
- DEPTH - 8 1/8"

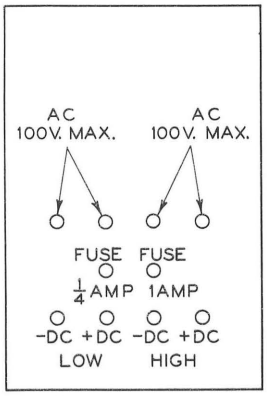

Order by catalog number and name shown in bold type

REF	NAME	CATALOG NUMBER
A	cTc LINE AND RELAY ENERGY POWER SUPPLY, complete with one Ref. B and one Ref. C	A53-320
B	TRANSFORMER UNIT with primary taps at 15-100 -10 volts; secondary taps from 20 to 160 volts in 20-volt steps, and from 160 to 280 volts in 40-volt steps. An additional 20-volt step provides a maximum output of 300 volts. An ON-OFF switch is inserted in the primary leads	A53-305
C	LINE AND RELAY ENERGY RECTIFIER-FILTER UNIT with maximum input of 300 volts a-c and maximum d-c outputs of: 255 volts (500 ma. load) from the line energy rectifier-filter section, 100 volts (150 ma. load) from the relay energy rectifier filter section	A53-325

REPLACEMENT PARTS

Order by catalog number and name shown in bold type

REF	NAME	CATALOG NUMBER
*	SWITCH, DPST, two-position toggle switch. CUTLER-HAMMER - catalog number 82607, for transformer unit catalog number A53-305	P53-301
	THE FOLLOWING ARE FOR FILTER UNITS, CATALOG NUMBER A53-310 and A53-325.	
* 1	FUSE, 1 ampere, LITTLE FUSE, 3AG-312001	P53-303
1A	FUSE HOLDER, for above	P53-305
* 2	DIODE, silicon, 600 volts peak inverse voltage, 750 ma. maximum forward current. TEXAS INSTRUMENT, 1N2071 . .	P53-307
3	CHOKE	P53-309
4	RESISTOR, 20 K ohms ± 5%, 10 watts.	P53-311
5	RESISTOR, 10 K ohms ± 5%, 10 watts.	P53-313
* 6	CAPACITOR, 80 mfd, 450 vdcw, dry electroletic. SPRAGUE, Type 17D	P53-315
	THE FOLLOWING ARE FOR FILTER UNIT, CATALOG NUMBER A53-325 ONLY.	
* 7	FUSE, 0.25 ampere SLO-BLO, LITTLE FUSE, 3AG 313.250	P53-317
7A	FUSE HOLDER, for above	P53-305
8	RESISTOR, 10 ohms, ± 10%, 2 watts, composition	P53-319

* Commercial items.

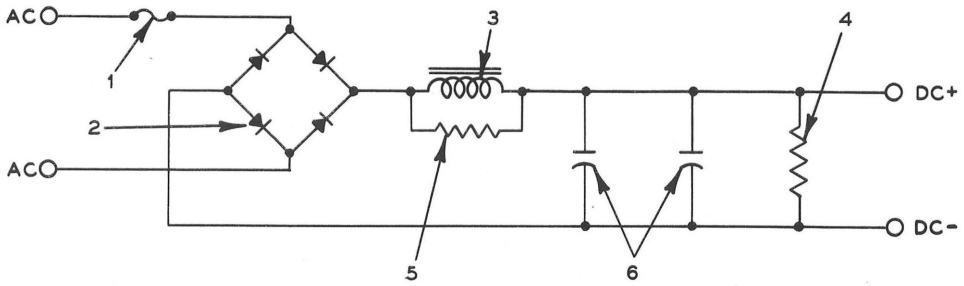

Line energy rectifier-filter unit.

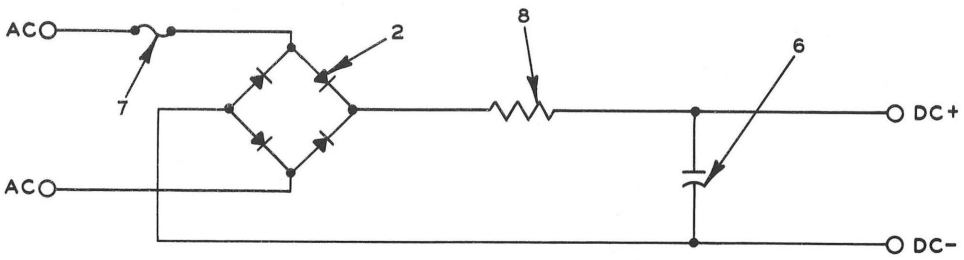

Relay energy rectifier-filter unit.

MOTOR ALTERNATORS

Alternators are equipped with 18" flexible leads for both input and output.

To order specify, "alternator" and give catalog number

NAME	CATALOG NUMBER
MOTOR ALTERNATOR, with rating as follows:	
Input: 24 volts d-c, 6 amperes	
Output: 115 volts a-c, 60 cycles, 80 watts	A53-330
MOTOR ALTERNATOR, with rating as follows:	
Input: 28 volts d-c, 3 amperes	
Output: 115 volts a-c, 60 cycles, 40 watts	A53-332

File in Catalog
Section 53 following
Tab 53.

CHANGE NOTIFICATION SHEET

SELENIUM RECTIFIERS

Starting immediately, we shall supply selenium rectifiers to replace certain of the Types B, B3, B3C, B3VA, BT, B3T, and BP copper-oxide rectifiers, as listed in tabulation on reverse side.

The Type ST selenium (with adjustable transformer) is available for 60 cycles only.

The Type S (without transformer) is designed for any frequency.

Type ST is arranged for either 115 - or 230 volt supply - by transposing the primary coil leads.

Type SC and SVA are for half-wave rectified track circuits.

Type SP are large capacity rectifiers, with variac control.

Overall dimensions

	Width	Depth	Height
Type ST	7 1/2"	8 1/8"	6 1/8"
Type S	7 1/2"	7 1/2"	6 1/8"
Type SC	7 1/2"	7 1/2"	6 1/8"
Type SVA	13 1/2"	15"	6 1/8"
Type SP-Size 1	11 3/8"	13"	16 1/4"
Type SP-Size 2 & 3	11 3/8"	13"	23 1/8"

As other selenium rectifiers become available, this sheet will be reissued.

Type ST

Dwg. No.	A-C. Input		D-C. Output		Supersedes Copper-Oxide		
	Volts	Cycles	Volts	Amps.	Type	Dwg. No.	Old Catalog Plate
59897-4 Gr. 1	230/115	60	3	2.5	B3T-104	57162 Gr. 1 & 3	P1711
" -4 Gr. 2	"	"	13.5	0.6	BT-116	54935-100 Gr. 1, 8 & 12	P1711
" -4 Gr. 3	"	"	13.5	1.75	BT-132	54935-101 Gr. 1 & 3	P1713
					BT-232	54935-102 Gr. 1 & 13	P1715
" -4 Gr. 4	"	"	13.5	3.25	BT-432	54935-103 Gr. 1 & 13	P1717
" -4 Gr. 5	"	"	15.5	0.5			
" -4 Gr. 6	"	"	"	1.5	BT-132	54935-101 Gr. 11	
" -4 Gr. 7	"	"	"	3.0	BT-232	54935-102 Gr. 23	
" -4 Gr. 8	"	"	31	0.5	BT-132	54935-101 Gr. 4	P1713
" -4 Gr. 9	"	"	"	1.5	BT-432	54935-3 Gr. 3 & 16	P1717
					BT-232	54935-102 Gr. 3 & 18	P1715
" -4 Gr. 11	"	"	120	0.3	BT-432	54935-3 Gr. 14 & 21	P1717
" -4 Gr. 12	"	"	3	5.0	B3T-204	57162-1 Gr. 1	P1715

Type S

59899-4 Gr. 1	35	any	10-30	0.6	B116	54941-100 Gr. 1	P1701
					B132	54941-101 Gr. 1, 2, 3 & 6	P1703
" -4 Gr. 2	"	"	"	1.75	B232	54941-102 Gr. 1, 3 & 4	P1705
" -4 Gr. 3	"	"	"	3.25	B232	54941-102 Gr. 5	P1705
					B432	54941-103 Gr. 4	P1707
					B3-104	57164 Gr. 1	P1701
					B3-212	59626 Gr. 2	P1706

Type SC

59848 Gr. 1	——	——	5.0	2.2	B3C-102	57164-2 Gr. 1	P1782

Type SVA

59849 Gr. 1	——	——	5.0	2.2	B3VA-102	57558-1 Gr. 1	P1780

TYPE SP-Size 1

59894 Gr 1	115	60	145	3.0	BP-848	54725-5 Gr 3	P1748
	"	"	31	6.0	BP-248	54725-7 Gr 11 & 16	P1745
59894-2 Gr 1					BP-448	" -4 Gr 13 & 25	P1746
" -2 Gr 2	"	"	15.5	"	BP-248	54725-7 Gr 13	P1745

TYPE SP-Size 2

59894-1 Gr 1	230	60	15.6	25.0			
" -1 Gr 2	115	"	40	12.5			
" -1 Gr 3	"	"	31	12.5	BP-648	54725-5 Gr 28-29	P1747

TYPE SP-Size 3

59894-3 Gr 1	115	60	31	25.0	BP-1248	54725-2 Gr 11	P1749

CATALOG SECTION 53

Rectifiers

CONTENTS

	Page
Type S - rectifying unit in case	24
Type ST - rectifying unit with adjustable reactive transformer	22
Type SC - unit for half-wave rectified track circuits, for instrument case mounting	28
Type SVA - unit for half-wave rectified track circuits, for tie mounting	26
Type SP - large capacity rectifiers, with adjustable charging rate	30
Type S 1/4 - low capacity rectifiers for special application	34
Types SQ 1/2, and SQA 1/2 - low capacity rectifiers for special applications	32

For rectifiers used with relays, switch machines, coded track and Trakode® equipment, etc., refer to corresponding catalog sections. For resistors, arresters etc., see Catalog Section 3.

GENERAL RAILWAY SIGNAL COMPANY

A UNIT OF GENERAL SIGNAL CORPORATION

ROCHESTER, NEW YORK

PRINTED IN U.S.A.

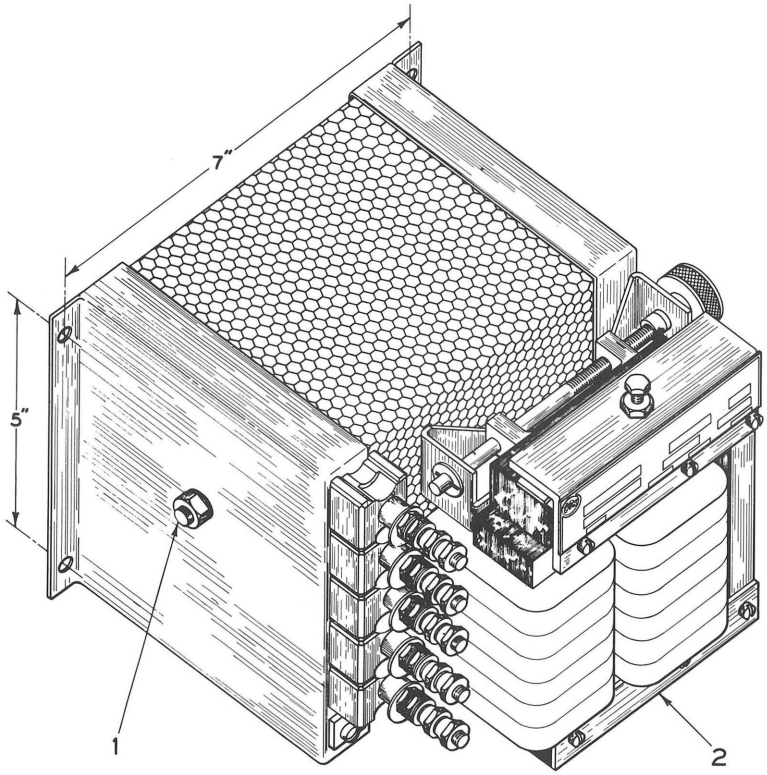

A

Type ST rectifier.

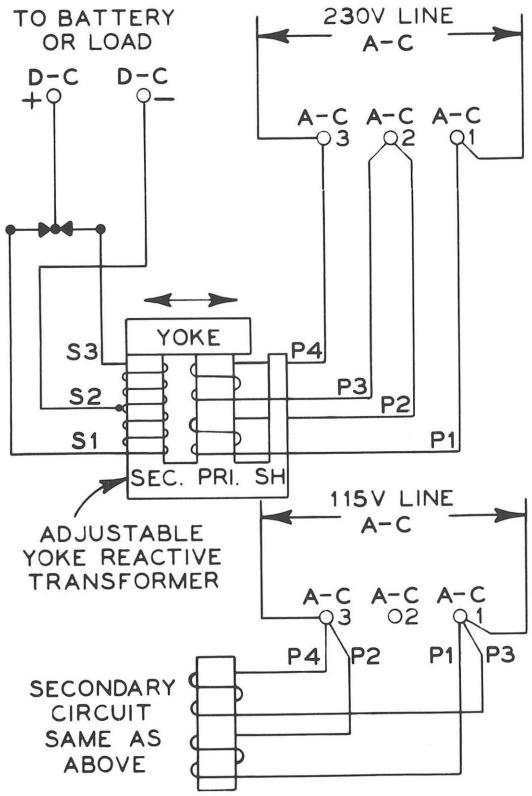

Typical circuit showing application of rectifiers Refs. A thru A6.

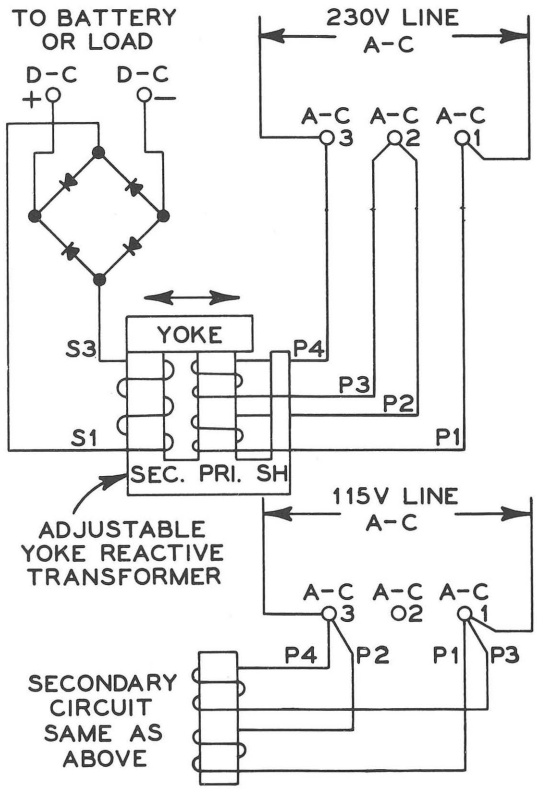

Typical circuit showing application of rectifiers Refs. A7 thru A9.

TYPE ST RECTIFIER
SELENIUM

The Type ST rectifier comprises a rectifying unit enclosed in a ventilated steel case and an adjustable, reactive transformer which provides, by means of the micrometer screw adjustment of the laminated yoke, an easy, gradual adjustment of the charging current from minimum to maximum rating.

The primary of the transformer is made up of two coils which can be connected in series for use on 230 volt a-c supply or connected in multiple for use on 115 volt a-c supply.

To order, specify "ST Rectifier" and give catalog number

ORDERING INFORMATION FOR COMPLETE RECTIFIER

REF.	A-C INPUT		D-C OUTPUT		FOR CHARGING	CATALOG NUMBER
	VOLTS	CYCLES	VOLTS	AMPS.	LEAD CELLS	
A	230/115	50/60	3	2.5	1	A53-515
A1	"	"	13.5	0.6	5-6	A53-516
A2	"	"	"	1.75	"	A53-517
A3	"	"	"	3.25	"	A53-518
A4	"	"	15.5	0.5	7	A53-519
A5	"	"	"	1.5	"	A53-520
A6	"	"	"	3.0	"	A53-521
A7	"	"	31	0.5	12-14	A53-522
A8	"	"	"	1.5	"	A53-523
A9	"	"	120	0.3	55	A53-524

ORDERING INFORMATION FOR RECTIFYING UNIT AND TRANSFORMER ONLY
(without case, terminal posts, leads etc.)

FOR USE WITH RECTIFIER	RECTIFYING UNIT		TRANSFORMER	
	REF.	CATALOG NO.	REF.	CATALOG NO.
Ref. A	1	P53-528	2	P53-500
Ref. A1	1A	P53-525	2A	P53-501
Ref. A2	1B	P53-528	2B	P53-502
Ref. A3	1C	P53-529	2C	P53-508
Ref. A4	1D	P53-525	2D	P53-501
Ref. A5	1E	P53-528	2E	P53-502
Ref. A6	1F	P53-529	2F	P53-508
Ref. A7	1G	P53-530	2G	P53-503
Ref. A8	1H	P53-527	2H	P53-504
Ref. A9	1J	P53-531	2J	P53-509

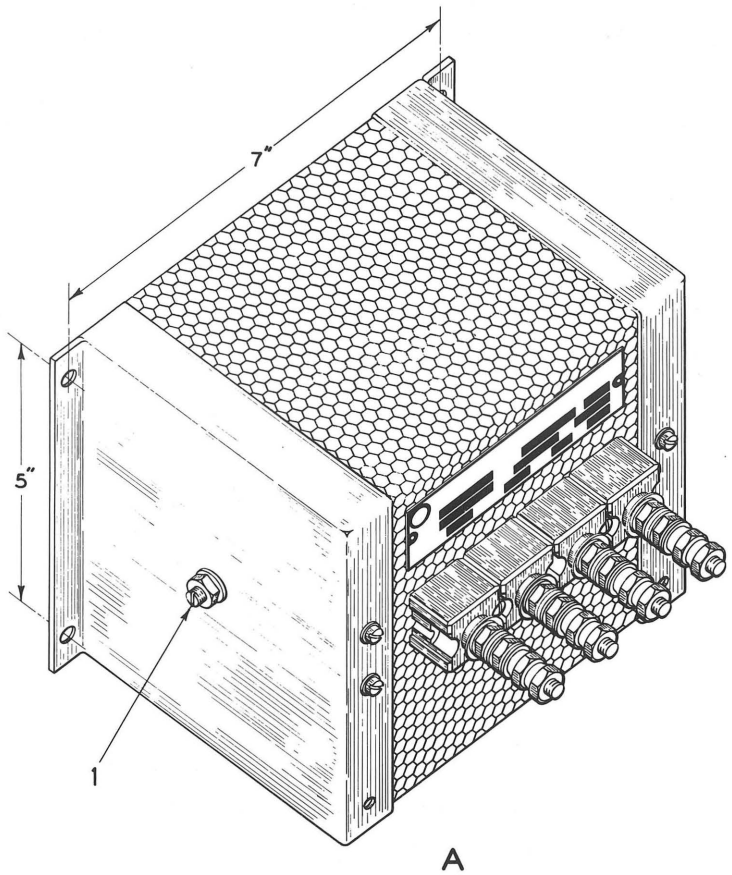

A

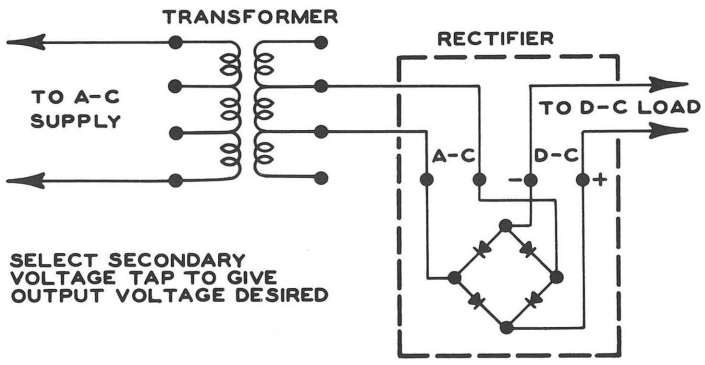

Typical circuit showing application of rectifier.

Type S rectifier.

TYPE S RECTIFIER
SELENIUM

The Type S rectifier comprises a rectifying unit enclosed in a ventilated steel case.

The Type S rectifier is for use with separate transformer having a suitable secondary voltage to supply a load, such as d-c relays, direct without battery. It can also be used for battery charging where a suitable low-voltage secondary is available on an existing transformer. An adjustable resistor may be used for regulating the charge.

To order, specify "S Rectifier" and give catalog number

ORDERING INFORMATION FOR COMPLETE RECTIFIER

REF.	A-C INPUT		D-C OUTPUT		CATALOG NUMBER
	VOLTS	CYCLES	VOLTS	AMPS.	
A	35 Max.	any	3-30	0.6	A53-535
A1	"	"	"	1.75	A53-536
A2	"	"	"	3.25	A53-537

ORDERING INFORMATION FOR RECTIFYING UNIT ONLY
(without case, terminal posts, leads etc.)

FOR USE WITH RECTIFIER	RECTIFYING UNIT	
	REF.	CATALOG NUMBER
Ref. A	1	P53-530
Ref. A1	1A	P53-527
Ref. A2	1B	P53-526

For transformers, see Catalog Section 95, page 5, Catalog numbers A95-15 and A95-21.

For resistors, arresters, etc., see Catalog Section 3.

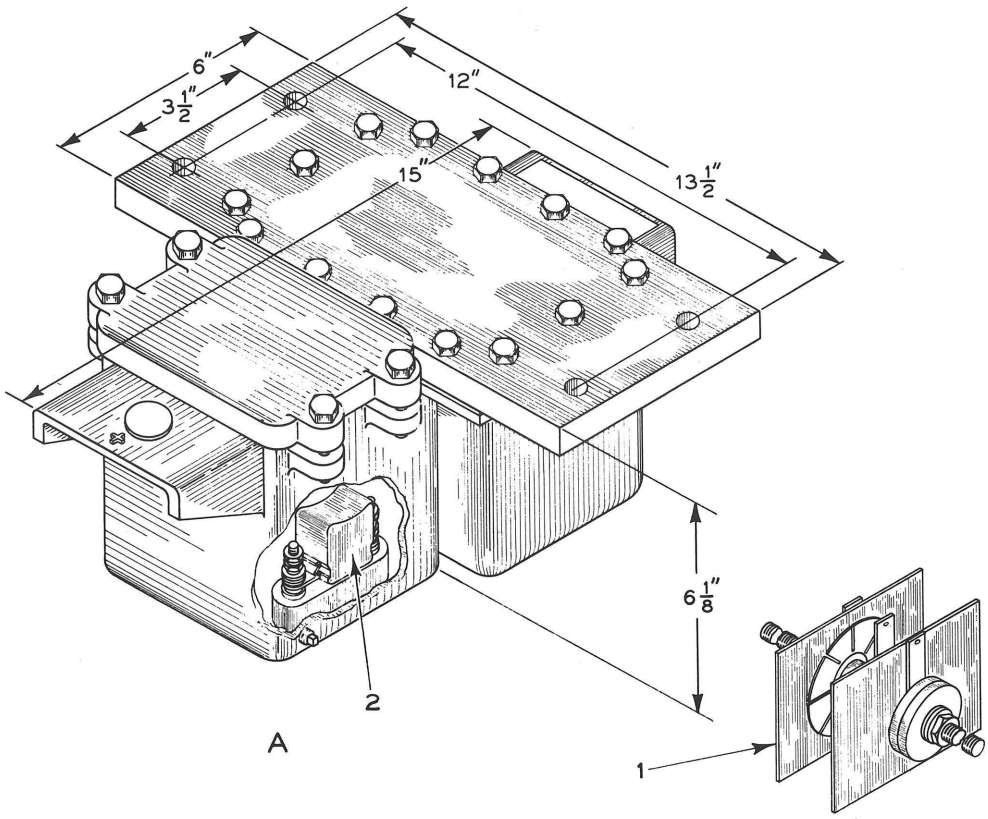

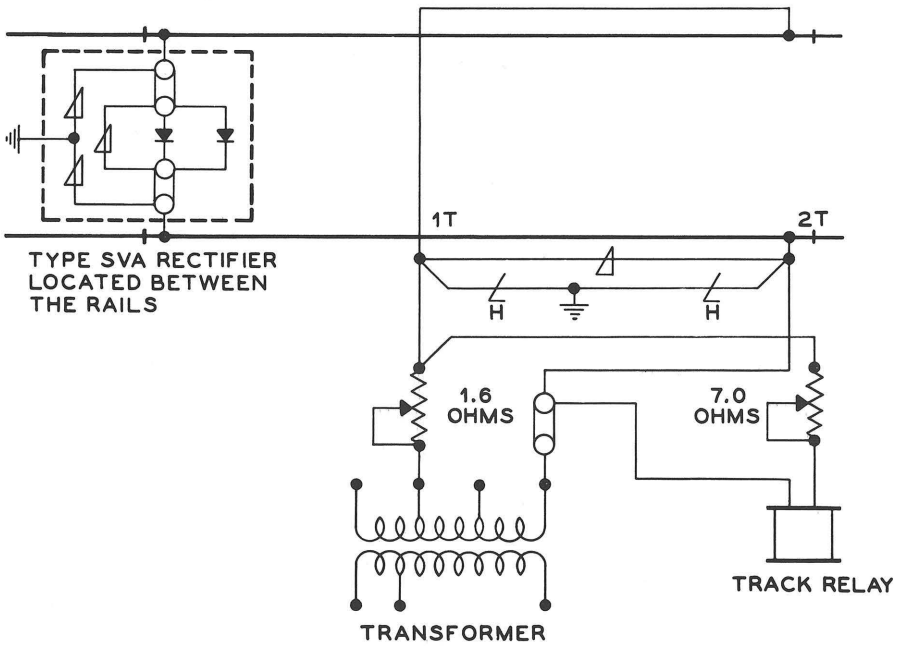

Typical use of Type SVA rectifier

Type SVA rectifier.

TYPE SVA RECTIFIER
SELENIUM

The Type SVA rectifier consists of a rectifying unit and three lightning arresters (Equalizers) mounted, without additional housing, between ties and rails.

This rectifier is for use in a-c half-wave rectified d-c track circuits. It is, of course, not suitable for use where the rails carry propulsion current.

When operating a 2 or 4-ohm relay, the rectifier can be used on track circuits:

1. 1500 feet long with minimum ballast resistance of 2.5 ohms per 1000 feet.
2. 2000 feet long with minimum ballast resistance of 4.0 ohms per 1000 feet.

When operating 1-ohm relay, the rectifier can be used on track circuits:

1. 6000 feet long with minimum ballast resistance of 5.0 ohms per 1000 feet.
2. 4000 feet long with minimum ballast resistance of 2.5 ohms per 1000 feet.

The use of this rectifier in track circuits as illustrated is ideal for highway crossing protection.

To order, specify "SVA Rectifier" and give catalog number

ORDERING INFORMATION FOR COMPLETE RECTIFIER

REF.	RATING		CATALOG NUMBER
	A-C VOLTS	D-C AMPS.	
A	5.0	2.2	A53-505
* A1	5.0	2.2	A53-506

* Complete with track connections

ORDERING INFORMATION FOR RECTIFYING UNIT
AND LIGHTNING ARRESTERS ONLY
(without case, terminal posts, leads etc.)

FOR USE WITH RECTIFIER	RECTIFYING UNIT		LIGHTNING ARRESTER (unit only)	
	REF. NO.	CATALOG NUMBER	REF. NO.	CATALOG NUMBER
Ref. A	1	P53-525	2	P3-252
Ref. A1	1	P53-525	2	P3-252

For transformers, see Catalog Section 95.

For resistors, arresters, etc., see Catalog Section 3.

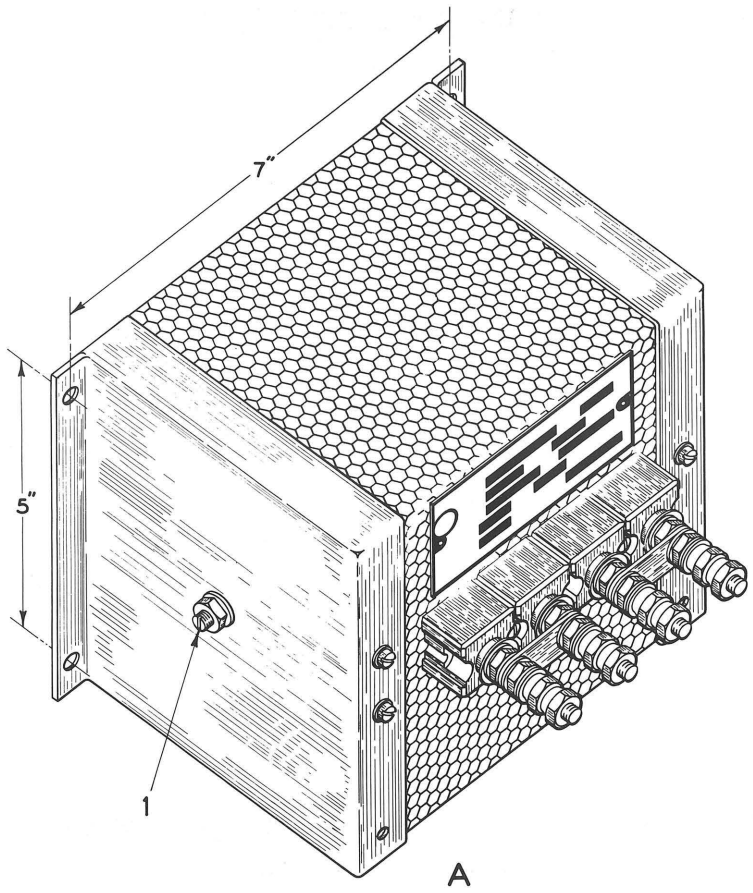

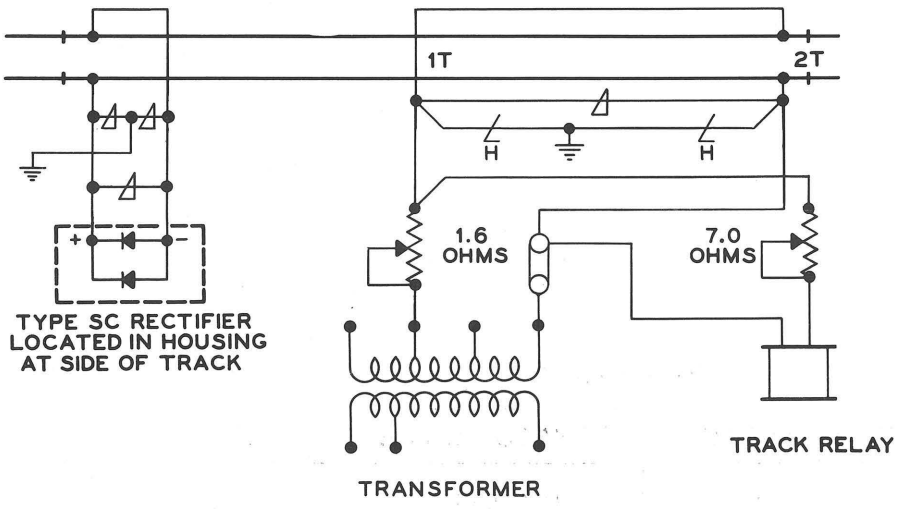

Typical use of Type SC rectifier.

Type SC rectifier.

TYPE SC RECTIFIER
SELENIUM

The Type SC rectifier consists of a rectifying unit enclosed in a ventilated steel case for mounting in a separate dry and well ventilated weatherproof housing.

This rectifier is for use in a-c half-wave rectified d-c track circuits. It is, of course, not suitable for use where the rails carry propulsion current.

When operating a 2 or 4-ohm relay, the rectifier can be used on track circuits:

1. 1500 feet long with minimum ballast resistance of 2.5 ohms per 1000 feet.
2. 2000 feet long with minimum ballast resistance of 4.0 ohms per 1000 feet.

When operating 1-ohm relay, the rectifier can be used on track circuits:

1. 6000 feet long with minimum ballast resistance of 5.0 ohms per 1000 feet.
2. 4000 feet long with minimum ballast resistance of 2.5 ohms per 1000 feet.

The use of this rectifier in track circuits as illustrated is ideal for highway crossing protection.

To order, specify "SC Rectifier" and give catalog number

ORDERING INFORMATION FOR COMPLETE RECTIFIER

REF.	RATING		CATALOG NUMBER
	A-C VOLTS	D-C AMPS.	
A	5.0	2.2	A53-500

ORDERING INFORMATION FOR RECTIFYING UNIT ONLY
(without case, terminal posts, leads etc.)

FOR USE WITH RECTIFIER	RECTIFYING UNIT	
	REF. NO.	CATALOG NUMBER
Ref. A	1	P53-525

For transformers, see Catalog Section 95.

For resistors, arresters, etc., see Catalog Section 3.

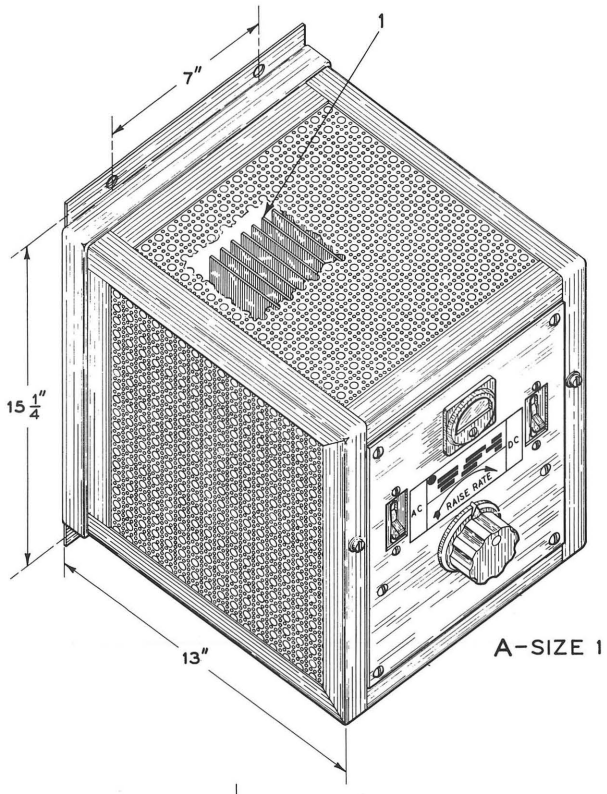

A-SIZE 1

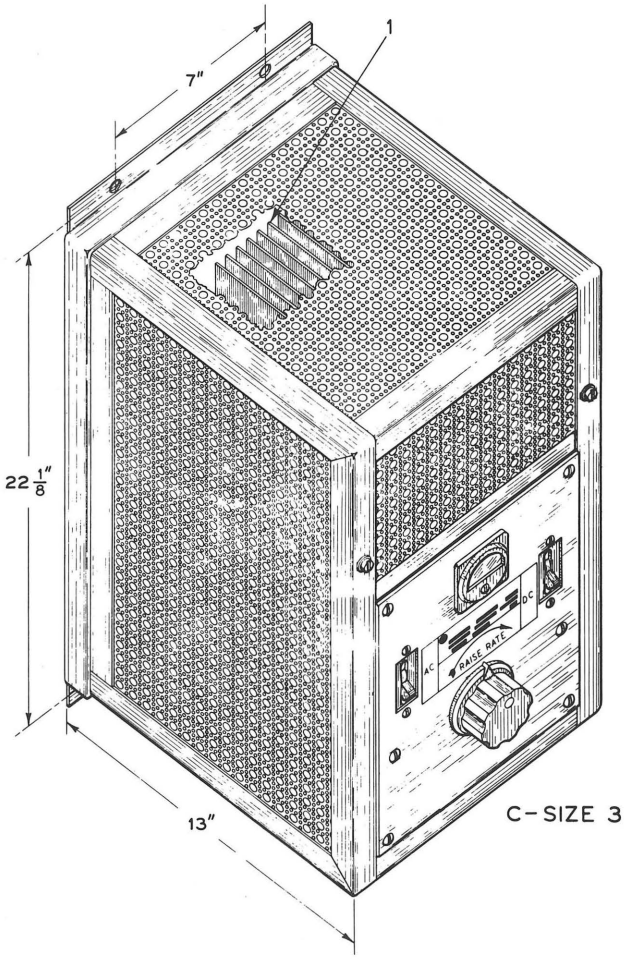

C-SIZE 3

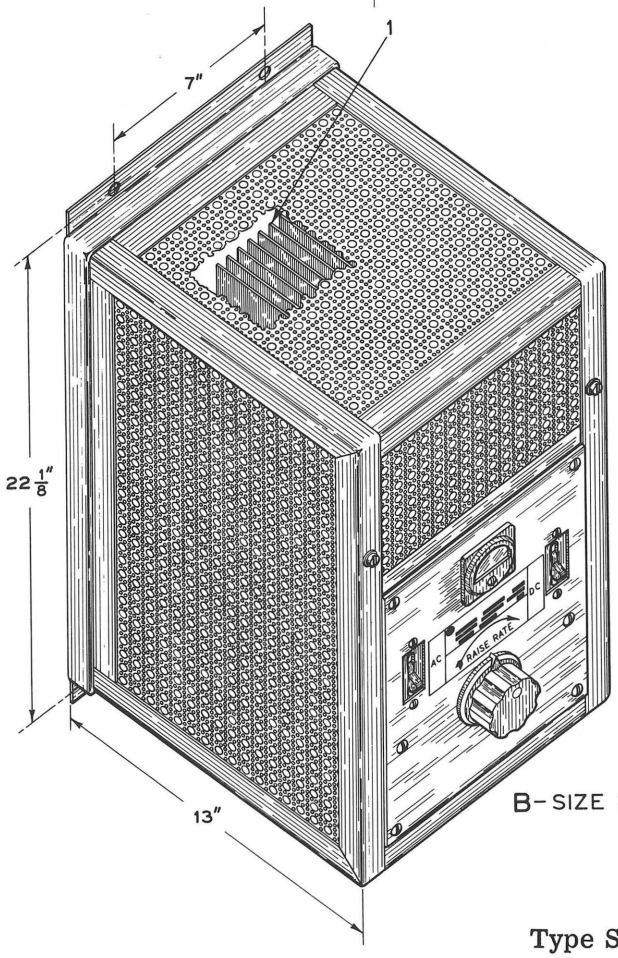

B-SIZE 2

Type SP rectifiers.

TYPE SP RECTIFIERS
SELENIUM

The Type SP rectifier comprises a rectifying unit and tapped transformer enclosed in a ventilated steel case. It also includes a control panel on which are mounted "on" and "off" switches and a means of adjusting the charging rate.

Taps on the transformer primary provide adjustments for variations in line voltage.

The ratings of the Type SP rectifiers are based on use in towers or places where the air temperature does not exceed 120 degrees F.

This rectifier can be supplied in several sizes as listed below.

To order, specify "SP Rectifier" and give catalog number

ORDERING INFORMATION FOR COMPLETE RECTIFIER

REF.	A-C INPUT VOLTS	A-C INPUT CYCLES	D-C OUTPUT VOLTS	D-C OUTPUT AMPS.	FOR CHARGING LEAD CELLS	CATALOG NUMBER
A	115	60	15.5	6.0	4-7	A53-566
A1	230	"	"	"	"	A53-568
A2	115	"	31	6.0	12-14	A53-565
A3	230	"	"	"	"	A53-567
A4	115	"	145	3.0	55-66	A53-550
A5	230	"	"	"	"	A53-551
B	115	60	15.5	25.0	4-7	A53-554
B1	230	"	"	"	"	A53-555
B2	115	"	31	12.5	12-14	A53-557
B3	230	"	"	"	"	A53-558
C	115	60	31	25.0	12-14	A53-573
C1	230	"	"	"	"	A53-574

ORDERING INFORMATION FOR RECTIFYING UNIT ONLY
(without case, terminal posts, leads, etc.)

FOR USE WITH RECTIFIER	RECTIFYING UNIT REF.	RECTIFYING UNIT CATALOG NO.
Ref. A	1	P53-526
Ref. A1	1A	P53-526
Ref. A2	1B	P53-526
Ref. A3	1C	P53-526
Ref. A4	1D	P53-521
Ref. A5	1E	P53-521
Ref. B	1F	P53-520
Ref. B1	1G	P53-520
Ref. B2	1H	P53-523
Ref. B3	1J	P53-523
Ref. C	1K	P53-520
Ref. C1	1M	P53-520

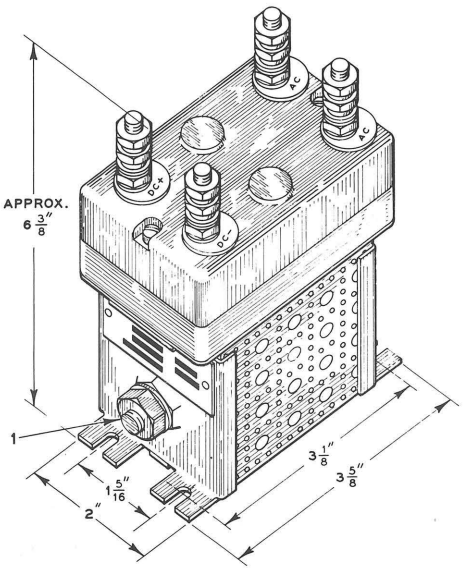

A-Type SQ rectifier.

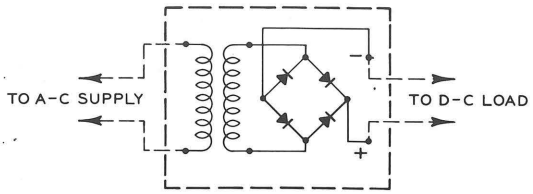

Typical circuit showing application of SQ rectifier.

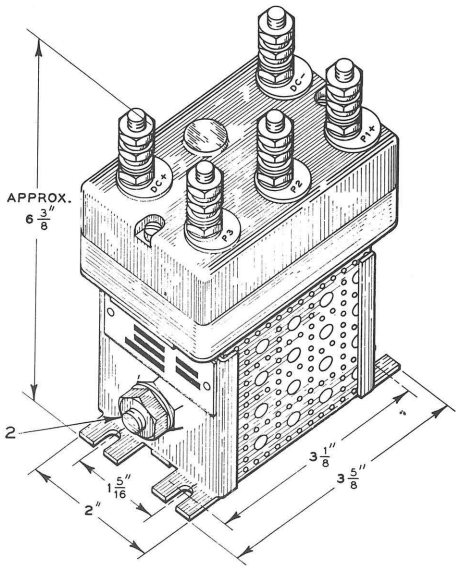

B-Type SQA rectifier.

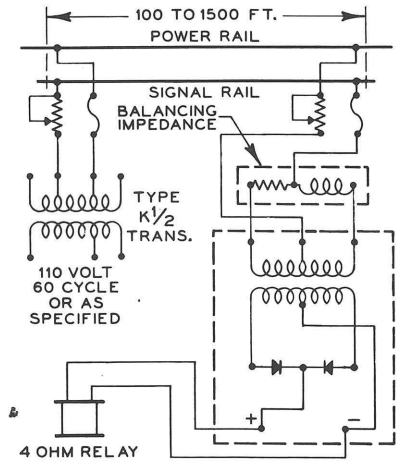

Typical circuit showing application of Type SQA rectifier.

TYPES SQ and SQA RECTIFIERS

SIZE 1/2 – SELENIUM

The Type SQ Size 1/2 is a low-capacity rectifiers with an insulating transformer built in as part of the rectifier assembly. These can be used to supply d-c without storage battery standby. These can also be used to operate a d-c relay on short a-c track circuits in yards.

The Type SQA Size 1/2 is a low capacity rectifier for the operation of d-c track relays in a single-rail, a-c track circuit with d-c propulsion. It contains a transformer with a center-tapped primary winding.

To order, specify "SQ or SQA Rectifier" and give catalog number

ORDERING INFORMATION FOR COMPLETE RECTIFIER

REF.	TYPE	A-C INPUT		D-C OUTPUT		CATALOG NUMBER
		VOLTS	CYCLES	VOLTS	AMPS.	
A	SQ 1/2	115	50/100	12.5	0.30	A53-590
A1	SQ 1/2	230	50/100	12.5	0.30	A53-591
A2	SQ 1/2	115	50/100	25.0	0.20	A53-592
A3	SQ 1/2	2	50/100	1.5	0.30	A53-596
A4	SQ 1/2	2	50/100	5.0	0.20	A53-597
B	SQA 1/2	4	50/100	1.2	0.30	A53-610

ORDERING INFORMATION FOR RECTIFYING UNIT

FOR USE WITH RECTIFIER	RECTIFYING UNIT	
	REF.	CATALOG NO.
Ref. A	1	P53-561
Ref. A1	1A	P53-561
Ref. A2	1B	P53-561
Ref. A3	1C	P53-561
Ref. A4	1D	P53-561
Ref. B	2	P53-561

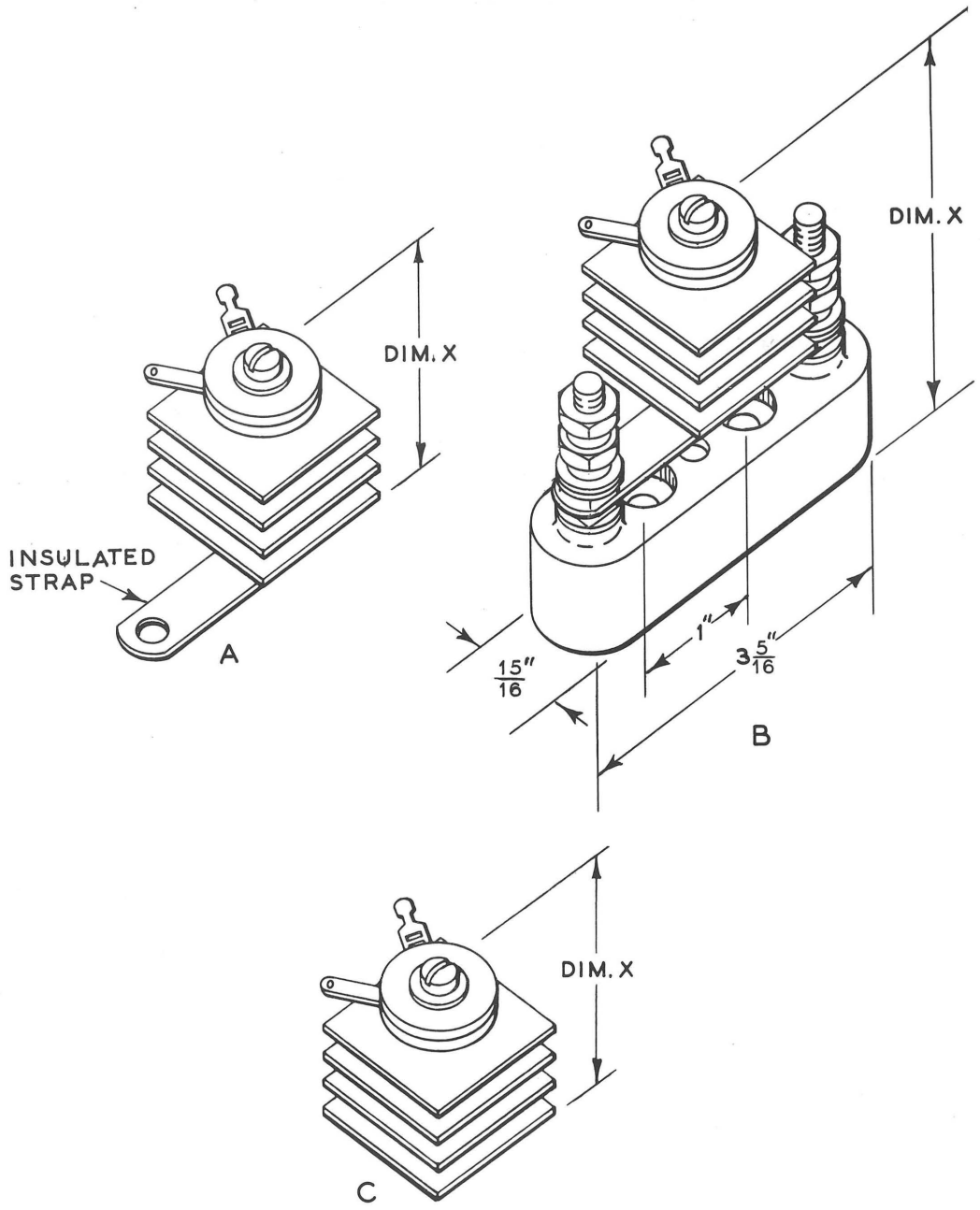

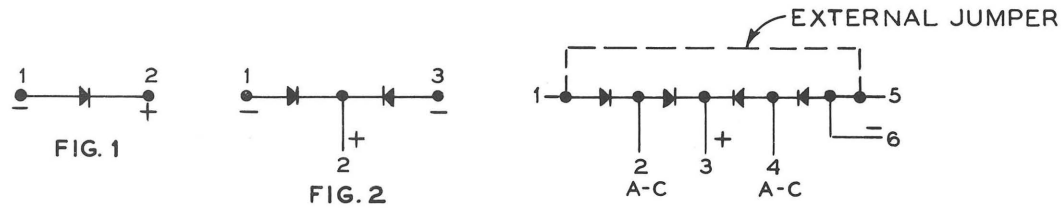

FIG. 1

FIG. 2

FIG. 3

Type S rectifiers

TYPE S RECTIFIERS

SIZE 1/4 – SELENIUM

These are small rectifiers or valves for general use. They may be mounted on a terminal block or on an insulated strap as shown on opposite page.

To order, specify "S Rectifier" and give catalog number

REF.	MAX. AC. VOLTS	D-C RATING		CIRCUIT	DIM. "X"	CATALOG NUMBER
		VOLTS	AMPS			
A	-	15	0.200	Fig. 1	1 5/16"	A53-539
A1	-	15	0.300	Fig. 2	1 11/16"	A53-540
A2	35	25	0.300	Fig. 3	2 7/16"	A53-541
B	-	15	0.200	Fig. 1	2 3/8"	A53-542
B1	-	15	0.300	Fig. 2	2 3/4"	A53-543
B2	35	25	0.300	Fig. 3	3 1/2"	A53-544
C	-	15	0.200	Fig. 1	1 5/16"	A53-365
C1	-	15	0.300	Fig. 2	1 11/16"	A53-366
C2	35	25	0.300	Fig. 3	2 7/16"	A53-367

Memoranda

File in Catalog
Section 62

CHANGE NOTIFICATION SHEET

TYPE B2 FLASHER RELAY

Flashing Contacts

Type B2 highway crossing flasher relays Catalog Numbers A62-190, -191, and -192 are furnished with the flashing back contacts 11, 14, 61, and 64 closed when the relay is deenergized. In previous relays of this type, the front contacts were closed with relay deenergized.

File in Catalog
Section 62

CHANGE NOTIFICATION SHEET

TYPE B2 FLASHER RELAY

Flashing Contacts

Type B2 highway crossing flasher relays Catalog Numbers A62-190, -191, and -192 are furnished with the flashing back contacts 11, 14, 81, and 84 closed when the relay is deenergized. In previous relays of this type, the front contacts were closed with relay deenergized.

CATALOG SECTION 62

Type B Relays
Type VTB Relays
Plug-In Type

CONTENTS

	Page
Biased-Neutral	6
Code-Responsive	7
Code Transmitter	8
Flasher, Highway Crossing	9
Flasher, Signal	9
Lamp-Control	9
Light-Out	10
Magnetic-Stick	10
Neutral	11
Neutral, Quick-Pickup	12
Neutral, Slow-Pickup	12
Neutral, Slow-Pickup and Slow-Release	12
Neutral, Slow-Release	12-13
Polarized	13
Power-Transfer	13
Primary-Secondary	14
Retained-Neutral	14
Slow-Pickup, Slow-Release, Quick-Crossover	15
Switch Control	15
Switch-Overload	15
Timing, Motor-Operated	16
Timing, Thermal	16-17
Track	6-11-14-17
Two-Rate Charge-Control	17
Vane	17
VTB	18
General Information	2
How to Order	2
Individual Mountings	20
Plugboards	20

TOOLS FOR TRANSPORTATION

GENERAL RAILWAY SIGNAL COMPANY

ROCHESTER, NEW YORK

Printed in U. S. A.

A1503

October 1964

GENERAL INFORMATION

A.A.R. Specifications are adhered to in the design of these relays.

All Type B relays, unless otherwise described, have a 0.050″ front contact opening and are equipped with metal-impregnated-carbon-to-metal front and metal-to-metal back contacts.

For more detailed descriptions, including circuit applications, see Handbook 75—or write your GRS sales office for such specific data as you may need.

For Type B relays used with train control equipment and coded cab signal apparatus, see Handbooks 6, 16, or 22.

Contacts are designated under relay descriptions as follows (symbols show de-energized positions):

ABBREVIATION	MEANING	SYMBOL
F	Front	
FB	Front-Back	
B	Back	
NR	Normal-Reverse	
CBO (MB)	Close-Before-Open (Make-Before-Break)	
HD	Heavy duty	
EHD	Extra heavy-duty, with magnetic blowouts	

DIMENSIONS FOR TYPE B RELAYS

SIZE	HEIGHT	WIDTH	DEPTH
1	6 5/16″	2 7/16″	8 9/16″
2	6 5/16″	4 15/16″	8 9/16″

HOW TO ORDER

Order Type B relay and give catalog number and quantity.

Plugboards must be ordered separately, see Page 21.

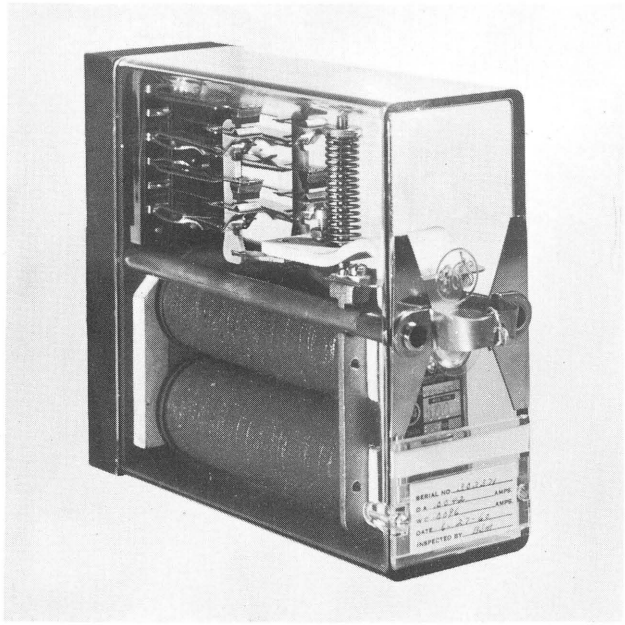

Neutral, Size 1

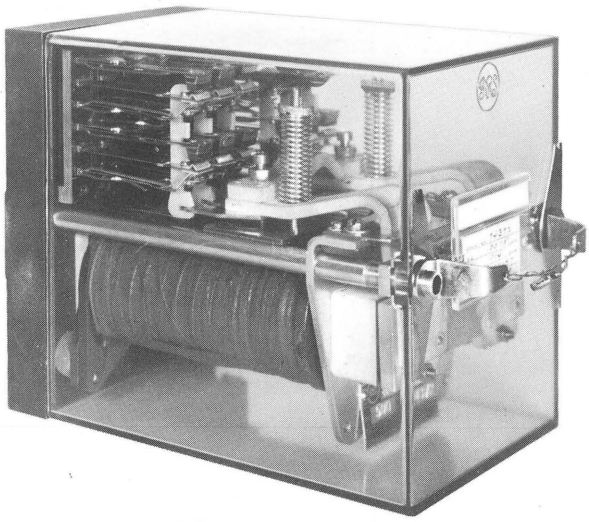

Neutral, Size 2

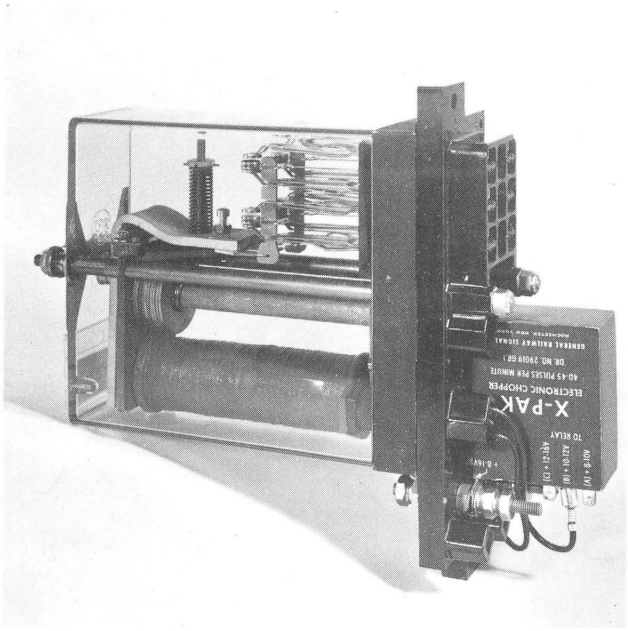

Highway Crossing Flasher, Size 1

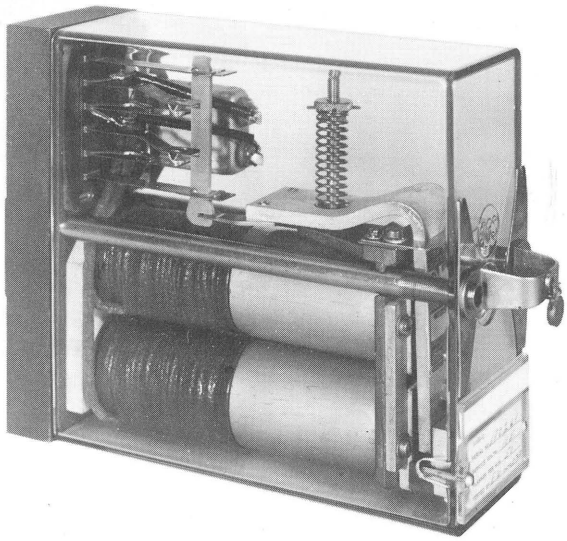

Signal Flasher, Size 1

Typical Type B Relays

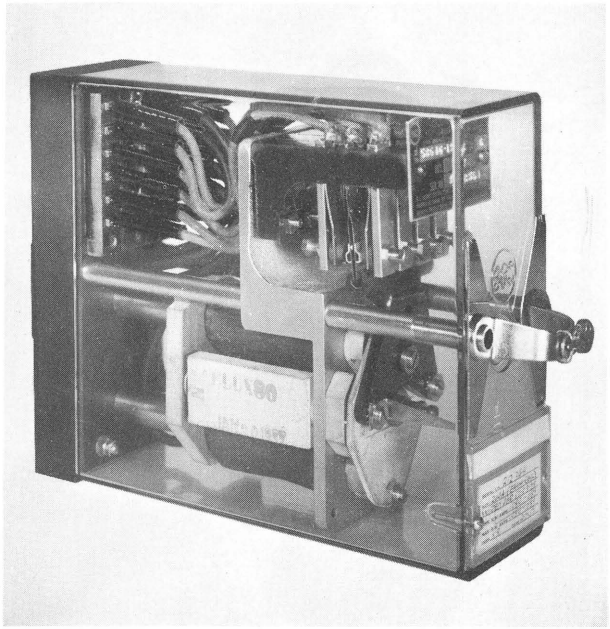

Magnetic-Stick, Size 1

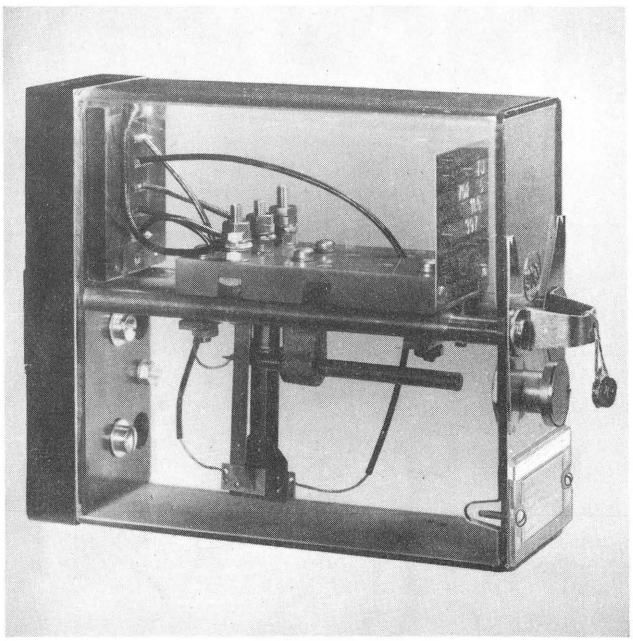

Thermal, Size 1

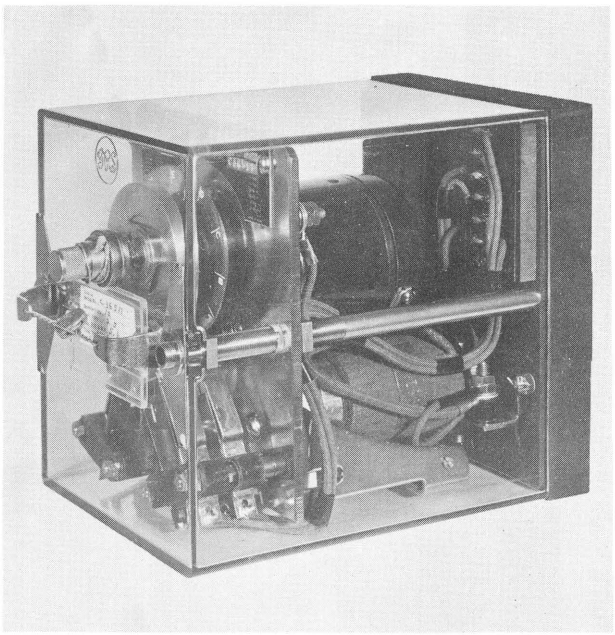

Timing, Motor-Operated, Size 2

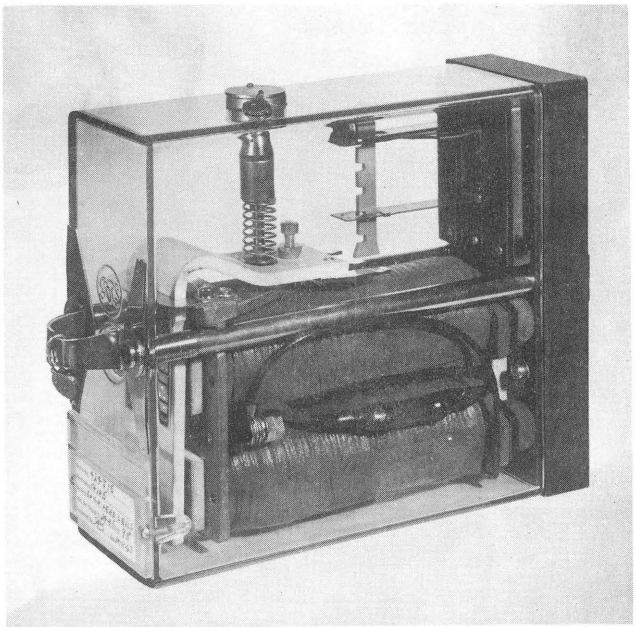

Two-Rate Charge Control, Size 1

Typical Type B Relays

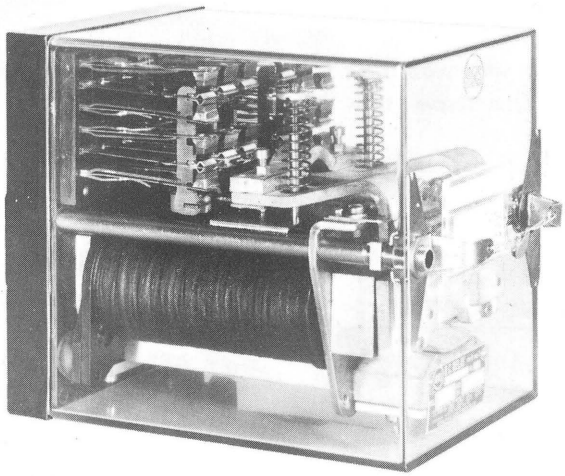

Polarized, Size 2

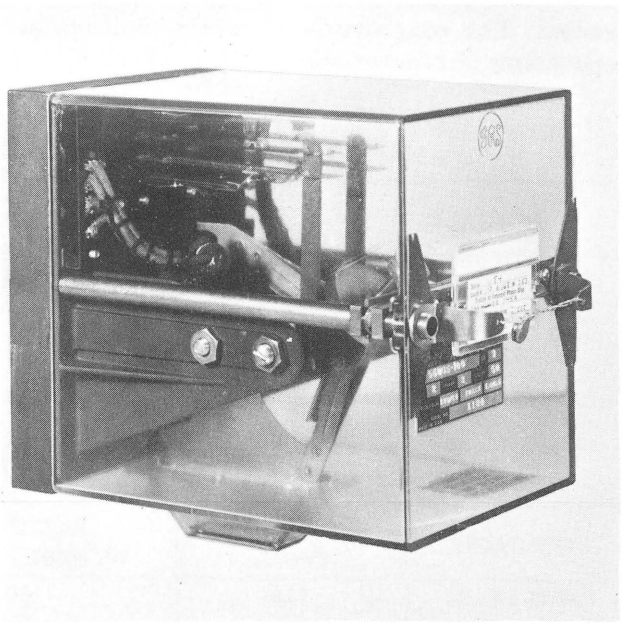

Vane, Size 2

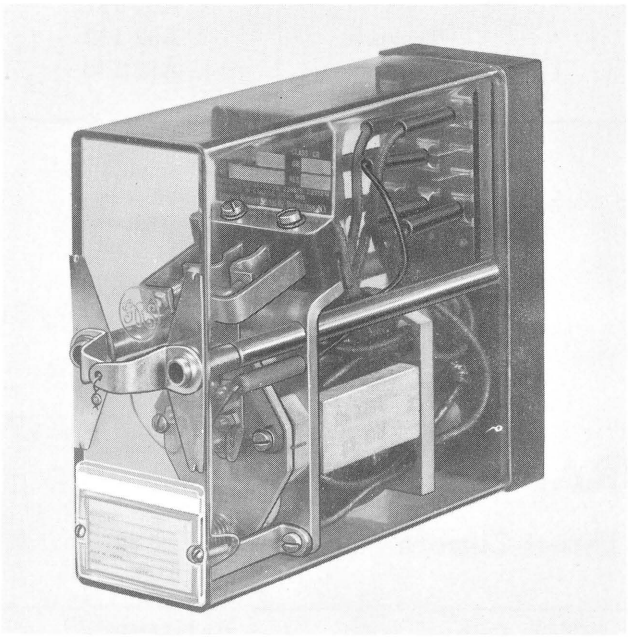

Code-Responsive, Size 1

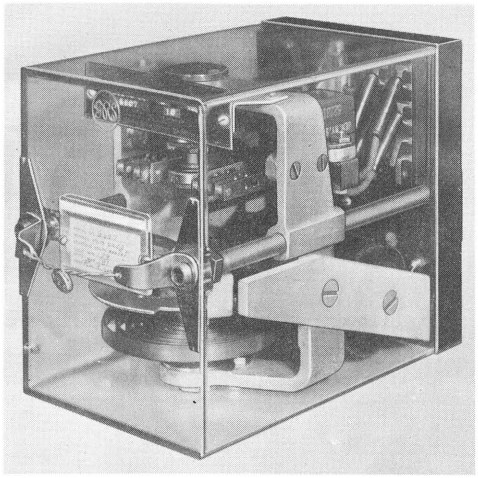

Code Transmitter, Size 2

Typical Type B Relays

BIASED-NEUTRAL RELAY

Type B Size 1, Direct-Current

This relay is biased to pick up on one polarity only. It will not pick up when the polarity is reversed. The magnitude of reverse voltage as well as the time it is applied, will not affect the operating characteristics of this relay.

STANDARD RELAYS

CONTACTS	RESISTANCE OHMS	PICKUP AND WORKING AMPERES	CATALOG NUMBER
4FB-2F-1B	2	.150	A62-120
"	500	.0115	A62-122
6FB	500	.0115	A62-125

SPECIFIC APPLICATION RELAYS

CONTACTS	RESISTANCE OHMS	PICKUP AND WORKING AMPERES	NOTES	CATALOG NUMBER
4FB-1F-2B	750	.008	Trakode	A62-129
* "	"	"	"	A62-128
4FB-2F-1B	63	.029		A62-130
"	330	.012		A62-131
"	750	.008	Trakode	A62-132
6FB	63	.029		A62-140

* Special adjustment on contacts 35 and 36

BIASED-NEUTRAL RELAY

Type B Size 2, Direct-Current

CONTACTS	RESISTANCE OHMS	PICKUP AND WORKING AMPERES	CATALOG NUMBER
8FB-4F-2B	350	.016	A62-145
12FB	"	"	A62-150

CODE-RESPONSIVE RELAY (CR)

Type B Size 1, Direct-Current

This relay is built in Size 1 only. It is made with a light armature and contact structure so that it will respond quickly to coded pulses of energy. Contacts are metal-to-metal.

It is polar-biased, and the armature is spring-returned to the normal position.

STANDARD RELAYS

NOMINAL SYSTEM VOLTAGE	CONTACTS	RESISTANCE OHMS	NOTES	CATALOG NUMBER
—	2FB	.14	Track	A62-155
10	"	200	Line code repeater	A62-156
"	4FB	80	" " "	A62-157

SPECIFIC APPLICATION RELAYS

NOMINAL SYSTEM VOLTAGE	CONTACTS	RESISTANCE OHMS	NOTES	CATALOG NUMBER
10	2FB	40	Impulse relay for inverse code.	A62-161
"	"	60	Line code repeater to Trakode	A62-164
"	"	300	obtain delayed release.	A62-162
"	"	1400	Line code repeater to obtain delayed pickup.	A62-163

CODE TRANSMITTER

Type B Size 2, Direct-Current

Type B code transmitters are built in Size 2 only. These transmitters have oscillating armatures carried on vertical shafts. Contacts are metal-to-metal and are actuated by cams on the vertical shaft.

When driving coil is deenergized, all contacts used to control external circuits are open. When energized, contacts open and close at code rate.

STANDARD TRANSMITTERS (Non-Locking Type)

CODE RATE	CONTACTS	RESISTANCE OHMS	NOMINAL SYSTEM VOLTAGE	CATALOG NUMBER
		WITH CONTACTS FOR UP TO 30 VOLTS		
75	2F-2B	150	10	A62-170
120	"	"	"	A62-171
180	"	"	"	A62-172
		WITH CONTACTS FOR 30 VOLTS AND UP		
75	2F-2B	150	10	A62-175
120	"	"	"	A62-176
180	"	"	"	A62-177

SPECIFIC APPLICATION TRANSMITTERS (Locking Type)

This type is used to provide a limited number of pulses at a predetermined rate. Construction is similar to non-locking type above except that when energized the rotary pendulum spring is held "wound up." When energy is removed, the pendulum oscillates to actuate the contacts to provide the desired pulses. (Used for Syncrostep® and Syncroscan®).

CODE RATE	CONTACTS	RESISTANCE OHMS	NOMINAL SYSTEM VOLTAGE	CATALOG NUMBER
270	2F-2B	150	28	A62-185
333⅓	"	"	"	A62-186

To order, specify "Coil or Spring" and give catalog number

Coil (Ref. 17)			ORDERING REFERENCES	
			Coil (Ref. 17)	Spring (Ref. 4)
Res. Ohms	Top or Bottom	Used with Catalog No.	Catalog Number	Catalog Number
50	Either	A62-317	P62-515	P62-131
900	"	A62-320	P62-523	P62-131
135	Top	A62-335	P62-538	P62-131
65	Bottom	A62-335	P62-537	P62-131
220	"	A62-340	P62-530	P62-131
300	"	A62-341	P62-533	P62-131
220	"	A62-345	P62-530	P62-131
194	"	A62-350	A62-532	P62-131
460	"	A62-353	P62-534	P62-131
450	"	A62-355	P62-519	P62-131
*470	"	A62-357	P62-524	P62-131
**194	"	A62-357	P62-532	P62-131
194	"	A62-358	P62-532	P62-131
*340	"	A62-359	P62-522	P62-131
**194	"	A62-359	P62-532	P62-131
12	Either	A62-365	P62-691	P62-133
300	Bottom	A62-369	P62-533	P62-131
800	"	A62-370	P62-525	P62-131
900	"	A62-375	P62-523	P62-130
40	Either	A62-380	P62-548	P62-131
50	"	A62-401	P62-515	P62-132
100	"	A62-406 & 407	P62-516	P62-130
1.7	Top	A62-410	P62-536	P62-131
2.2	Bottom	A62-410	P62-535	P62-131
220	Bottom	A62-415	P62-530	P62-131
180	Either	A62-421	P62-565	P62-131
250	Either	A62-427	P62-518	P62-131
250	Either	A62-429	P62-554	P62-133
135	Top	A62-430 & 431	P62-529	P62-130
.064	Bottom	A62-430 & 431	P 62-568	P62-130

* for use with relay having copper slug
** for use with relay having aluminum slug

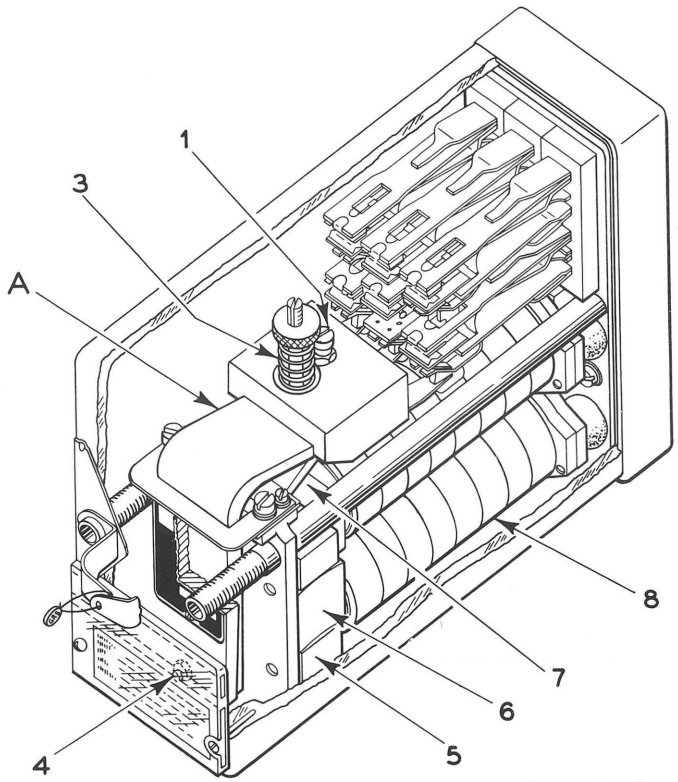

Type B Size 1, biased-neutral relay.

FOR PARTS NOT SHOWN HERE, SEE PAGE 4.

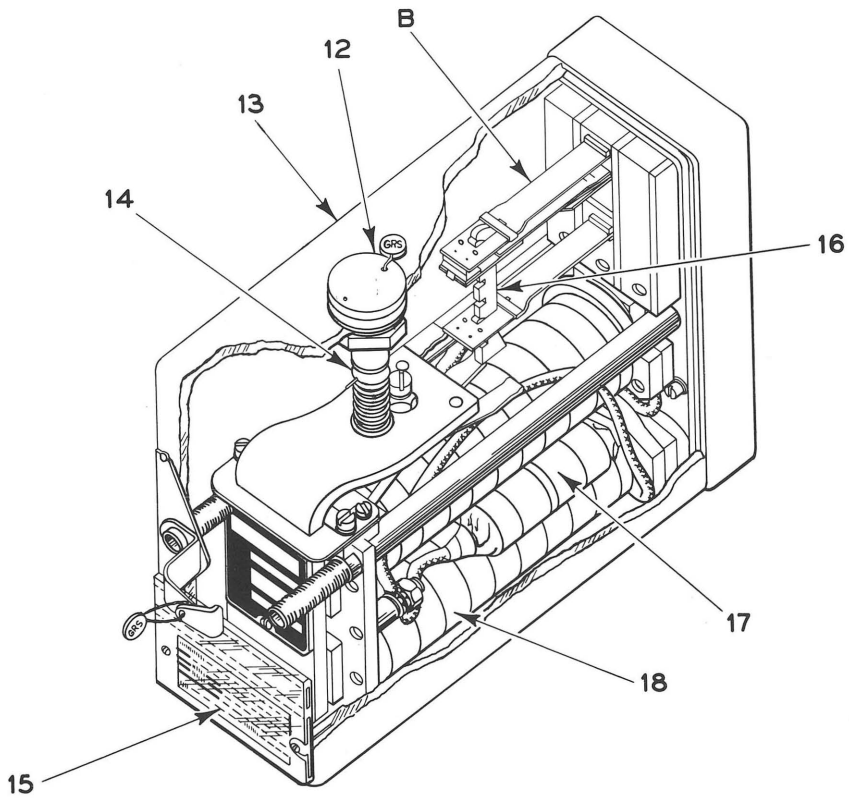

Type B Size 1, two-rate charge-control relay.

NEUTRAL RELAY, REGULAR-RELEASE

Type B Size 1, Direct-Current, Line and Track

STANDARD RELAYS

CONTACTS	RESISTANCE OHMS	PICKUP AND WORKING AMPERES	NOTES	CATALOG NUMBER
6FB	4	.085		A62-261
"	500	.0115		A62-262
4F-2B	1.8	.101		A62-270
"	4	.070		A62-271
4FB-2F-1B	1.8	.124		A62-275
"	4	.085		A62-276
"	500	.0115		A62-277

SPECIFIC APPLICATION RELAYS

CONTACTS	RESISTANCE OHMS	PICKUP AND WORKING AMPERES	NOTES	CATALOG NUMBER
6FB	84	.0185		A62-295
"	900	.008		A62-296
4F-2B	350	.0082		A62-300
4FB-2F-1B	84	.0185		A62-305
"	350	.013		A62-306
"	900	.008		A62-308
"	350	.013	Heavy-duty contacts	A62-309
"	500	.0115	" " "	A62-310
"	900	.008	" " "	A62-311
			FOR CODED TRACK	
2FB-3F-2B	42	.041	Operated from master transformer.	A62-313
6FB	9	.052	Operated from decoder unit.	A62-314
4FB-2F-1B	50	.0335	Pulse bridging. Requires rectifier.	A62-315
—	—	—	Rectifier for above	A53-115
4FB	6	.110	FOR OVERLAY TRACK CIRCUIT	A62-293
4F-2B	100	.015	" "	A62-317
4FB-1F-2B	1800	.004	FOR TRAKODE	A62-320
4FB-2F-1B	450/8	.016/.110	FOR TRAKODE	A62-312

NEUTRAL RELAY, REGULAR-RELEASE

Type B Size 2, Direct-Current, Line

CONTACTS	RESISTANCE OHMS	PICKUP AND WORKING AMPERES	NOTES	CATALOG NUMBER
12FB	500	.014		A62-330

SLOW AND QUICK-ACTING RELAYS

Time of release is the time required to open front contacts after energy is removed from the relay. Time of pickup is the time required to make front contacts after energy is applied to the relay. Operating values shown are based on 70 F. This relay is intended for operation from a field stepper unit. External rectifier-resistor unit is required for operation - order separately.

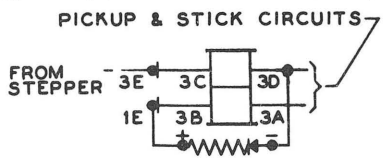

NEUTRAL RELAY, QUICK-PICKUP

Type B Size 1, Direct-Current

CONTACTS	RESISTANCE OHMS	CATALOG NUMBER	
		RECTIFIER ONLY	RELAY ONLY
4FB-2F-1B	135/65	A53-122	A62-335

NEUTRAL RELAY, SLOW-PICKUP

Type B Size 1, Direct-Current, Line

CONTACTS	RESISTANCE OHMS	PICKUP AND WORKING AMPERES	TIME OF PICKUP	CATALOG NUMBER
4FB-2F-1B	230	.036	1.35 seconds at 11 volts	A62-340
"	300	.032	1.4 seconds at 13.2 volts	A62-341
6FB	230	.036	1.35 seconds at 11 volts	A62-345

NEUTRAL RELAY, SLOW-PICKUP and SLOW-RELEASE

Type B Size 1, Direct-Current, Line

CONTACTS	RESISTANCE OHMS	PICKUP AND WORKING AMPERES	TIME OF PICKUP AND RELEASE	CATALOG NUMBER
4FB-2F-1B	194	.042	1.1 seconds pickup at 10.5 volts. .9 second release at 10 volts	A62-350

NEUTRAL RELAY, SLOW-RELEASE

Type B Size 1, Direct-Current, Line

STANDARD RELAYS

CONTACTS	RESISTANCE OHMS	PICKUP AND WORKING AMPERES	TIME OF RELEASE	CATALOG NUMBER
2FB	460	.0135	3.0 seconds at 9 volts	A62-353
4FB	450	.0125	.9 second at 10 volts	A62-355
4FB-2F-1B	470	.0153	1 second at 10 volts	A62-357
"	194	.032	2.8 seconds at 10 volts	A62-358
6FB	340	.019	1 second at 10 volts	A62-359

NEUTRAL RELAY, SLOW-RELEASE

Type B Size 1, Direct-Current, Line

SPECIFIC APPLICATION RELAYS

CONTACTS	RESISTANCE OHMS	PICKUP AND WORKING AMPERES	TIME OF RELEASE	NOTES	CATALOG NUMBER
2FB	24	.0215	.4 second at 0.6 volt	Approach Line	A62-365
4FB-2F-1B	300	.027	1.7 seconds at 8.4 volts		A62-369
"	800	.0115	.9 second at 10 volts	Primary Battery	A62-370
2F-4B	80	.023	.1 second at 2 volts		A62-380

POLARIZED RELAY

Type B Size 2, Direct-Current

This relay has two armatures, one polar and one neutral. The polar armature operates either to the normal or reverse position, depending upon the polarity of the applied energy and remains in the last-operated position. The neutral armature drops momentarily during pole-changing.

CONTACTS		RESISTANCE OHMS	PICKUP AND WORKING AMPERES	CATALOG NUMBER
NEUTRAL	POLAR			
4FB	4NR	200	.0201	A62-390
"	"	500	.0132	A62-391

POWER-TRANSFER NEUTRAL RELAY

Type B Size 1

This relay is essentially a d-c neutral line relay operating on rectified a-c. If a-c energy fails, the relay armature drops and automatically transfers the circuits onto local battery. The ratio of release voltage to pickup voltage is about 75 percent to provide transfer before signal aspects are impaired. Contacts are metal-to-metal – capacity 15 amperes at 15 volts. External rectifier is required for operation – order separately.

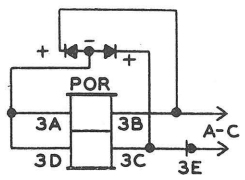

CONTACTS	RATED VOLTAGE A-C	RESISTANCE EACH SIDE OHMS	CATALOG NUMBER	
			RECTIFIER ONLY	RELAY ONLY
2FB	10	50 - 50	A53-110	A62-401
6FB	"	100 - 100	"	A62-406
"	12	"	"	A62-407

PRIMARY-SECONDARY RELAY COMBINATION

Type B Size 1, Direct-Current

This combination of a track relay and a repeater is strongly recommended where extra high shunting sensitivity and protection against momentary loss of shunt are required. The repeater or secondary relay, when picked up, cuts out part of the winding of the track relay and inserts a corresponding amount of resistance. This, in effect, raises the value of current at which the track relay will release, yet does not affect the pickup current values. The secondary relay, in addition, is made slow in picking up to permit progressive and continuous track shunting as the train passes from one track section to another. Operating values shown are based on 70° F.

CONTACTS	RESISTANCE OHMS	PICKUP AND WORKING AMPERES	TIME OF PICKUP	CATALOG NUMBER
		PRIMARY		
4F-2B	4	.065	—	A62-410
		SECONDARY		
3FB-3B-1CBO	230	—	1.35 seconds at 11 volts	A62-415

RETAINED-NEUTRAL RELAY

Type B Size 1, Direct-Current

This relay, operated through an associated rectifier, remains in the energized position during a change of line polarity. Note each coil consists of two windings. External rectifiers are required for operation – order separately (two required).

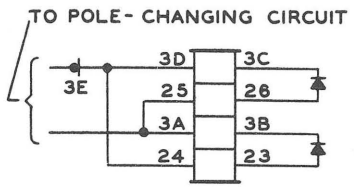

CONTACTS	RESISTANCE EACH COIL OHMS	PICKUP AND WORKING AMPERES	CATALOG NUMBER	
			RECTIFIER ONLY	RELAY ONLY
4FB	180 - 180	.0226	A53-120	A62-421

SLOW-PICKUP, SLOW-RELEASE, QUICK-CROSSOVER NEUTRAL RELAY

Type B Size 1, Direct-Current

The slow pickup and slow-release features of this relay are slightly different from usual in that the relay maintains full contact pressure for the entire time of pickup and release and then operates very rapidly. This quick-crossover feature (both pickup and release) is desirable for relays used to pole-change circuits, especially when there are relays in the pole-changed circuit that must remain energized during the period that the circuit is open. Operating values shown are based on 70° F.

CONTACTS	RESISTANCE OHMS	TIME OF PICKUP AND RELEASE	CATALOG NUMBER
4FB-2F-1B	124	1.25 seconds pickup and 1.5 seconds release at 11 volts	A62-425

SWITCH-CONTROL RELAY

Type B Size 1, Direct-Current

This relay is used to control energy to switch machines. Contacts are metal-to-metal.

CONTACTS	RESISTANCE OHMS	SWITCH MACHINE OPERATING VOLTAGE	PICKUP AND WORKING AMPERES	NOTES	CATALOG NUMBER
4FB	500	Low	.013	Neutral relay. HD contacts. .090'' front contact opening.	A62-427
2F-2B	500	Low or High	.018	Biased-neutral relay. EHD contacts. .125'' front contact opening.	A62-429

SWITCH-OVERLOAD NEUTRAL RELAY

Type B Size 1, Direct-Current

This relay is used to cut off energy from a switch control relay when the switch machine motor is overloaded because of an obstruction, and to provide for automatic resetting when polarity of the control circuit is reversed. The relay picks up on the overload current and remains stuck up, until control circuit is reversed. The relay is made slow in picking up to prevent pickup on the heavy current surges through the switch machine motor when starting. This relay has metal-to-metal, close-before-open (CBO) contacts with .030″ front openings.

CONTACTS	RESISTANCE OHMS	SWITCH MACHINE OPERATING VOLTAGE	OVERLOAD RATING AMPERES	CATALOG NUMBER
2CBO	.064-135	Low	18	A62-430
"	"	High	12	A62-431

TIMING RELAY, MOTOR-OPERATED

Type B Size 2, Direct-Current

This relay has an external time adjustment which can be sealed to prevent unauthorized adjustment. The relay is shipped adjusted to the maximum time, unsealed. All check contacts are metal-to-metal. Where one time contact is supplied, it is carbon-to-metal. Where two time contacts are supplied, they are metal-to-metal.

NOMINAL SYSTEM VOLTAGE	CONTACTS		TIME RANGE		CATALOG NUMBER
	CHECK	TIME	MIN.	MAX.	
10	1	1	4 seconds	64 seconds	A62-440
"	"	"	1 minute	8 minutes	A62-441
12	"	"	4 seconds	64 seconds	A62-442
"	"	"	1 minute	8 minutes	A62-443
10	2	2	4 seconds	64 seconds	A62-450
"	"	"	1 minute	8 minutes	A62-451
12	"	"	4 seconds	64 seconds	A62-452
"	"	"	1 minute	8 minutes	A62-453

TIMING RELAY, THERMAL

Type B Size 1, A-c or D-c

This relay has one independent normally closed check contact and one independent normally open time contact which are metal-to-metal. It has an external adjustment, which can be sealed to prevent unauthorized adjustment. The relay is shipped adjusted to the maximum time. Time ranges indicated are for a complete cycle of heating and cooling. Both of the contacts and the heating unit are externally connected.

STANDARD RELAYS

NOMINAL SYSTEM VOLTAGE	TIME RANGE—SECONDS		RESISTANCE OF HEATER—OHMS	CATALOG NUMBER
	MIN.	MAX.		
10	18	30	11.3	A62-458
12	"	"	18.6	A62-459
10	25	45	11.3	A62-464
12	"	"	18.6	A62-465
10	45	130	11.3	A62-462
12	"	"	18.6	A62-463

TIMING RELAY, THERMAL

Type B Size 1, A-c or D-c

SPECIFIC APPLICATION RELAYS

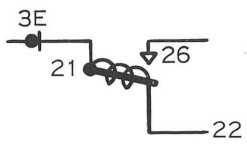

This relay has one normally open, metal-to-metal time contact. It has no check contact. Timing is pre-set and sealed at factory. Indicated time is for heating only. A single external connection is common to the contact and the heating unit.

NOMINAL SYSTEM VOLTAGE	NOMINAL TIME IN SECONDS	RESISTANCE OF HEATER—OHMS	CATALOG NUMBER
10	10	11.3	A62-470
12	"	18.6	A62-471

TWO-RATE CHARGE-CONTROL NEUTRAL RELAY

Type B Size 1, Direct-Current

For Lead Cells

This relay (operated by another relay, which is actuated periodically) is used in battery charging circuits. When the battery reaches its full charge, the relay operates to transfer from a high to a continuous low charge rate to ensure a fully charged battery under varying load and temperature conditions.

CONTACTS	RESISTANCE OHMS	NUMBER CELLS LEAD BATTERY	CATALOG NUMBER
1B	705	4 to 7	A62-475
"	1580	10 to 14	A62-476
"	14105	50 to 60	A62-477

VANE RELAY

Type B Size 2, Alternating-Current

Two-Position, Track Relay

These two-position a-c track relays, for use on single- or double-rail track circuits, have an aluminum vane operating in an air gap between the local and track coils. Both coils are double wound to provide a choice of series or multiple connection.

CONTACTS	LOCAL WINDING VOLTS	TRACK WINDING VOLTS	CYCLES	CATALOG NUMBER
2F-2B	110/55	1.0/0.5	50	A62-485
"	"	"	60	A62-486

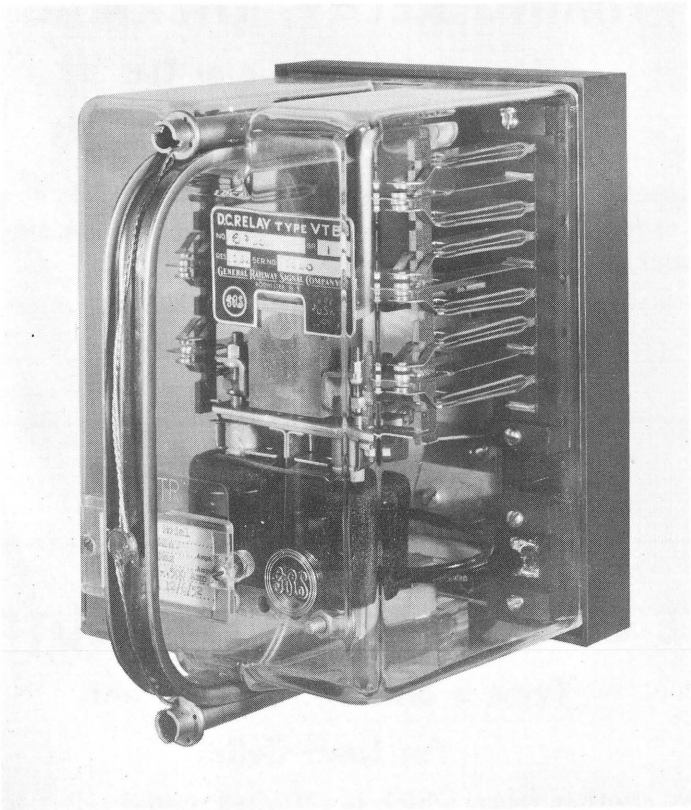

Height 7 1/16"
Width 4 5/16"
Depth 6 7/16"

TYPE VTB POLAR-BIASED RELAY

This biased relay is for use where quick response is essential, such as in coded track circuits, and coded line circuits for signal control.

Type VTB relays are quick-detachable. They mount on a plugboard and occupy the space of a Type B Size 2 relay. Contacts are metal-to-metal front and back.

Single Armature

NOMINAL SYSTEM VOLTAGE	CONTACTS PER ARMATURE	RESISTANCE OHMS	NOTES	CATALOG NUMBER
10 or 12	2FB	34	Line repeater	A62-497
"	"	200	Line	A62-490
—	"	0.24	Track	A62-491
—	3FB	"	"	A62-492
—	2FB	4	Approach track	A62-498

Double Armature

10 or 12	1FB-2F-1B	17-17	Line	A62-493
"	"	100-100	"	A62-494
—	1FB-1F-1B	0.20	Track	A62-530
10 or 12	"	17-17	Line	A62-531
—	2FB	4-4	Approach track	A62-532
—	3FB	0.20	Track	A62-495
10 or 12	3FB	17-17	Line	A62-533
"	"	100-100	Line	A62-534

Memoranda

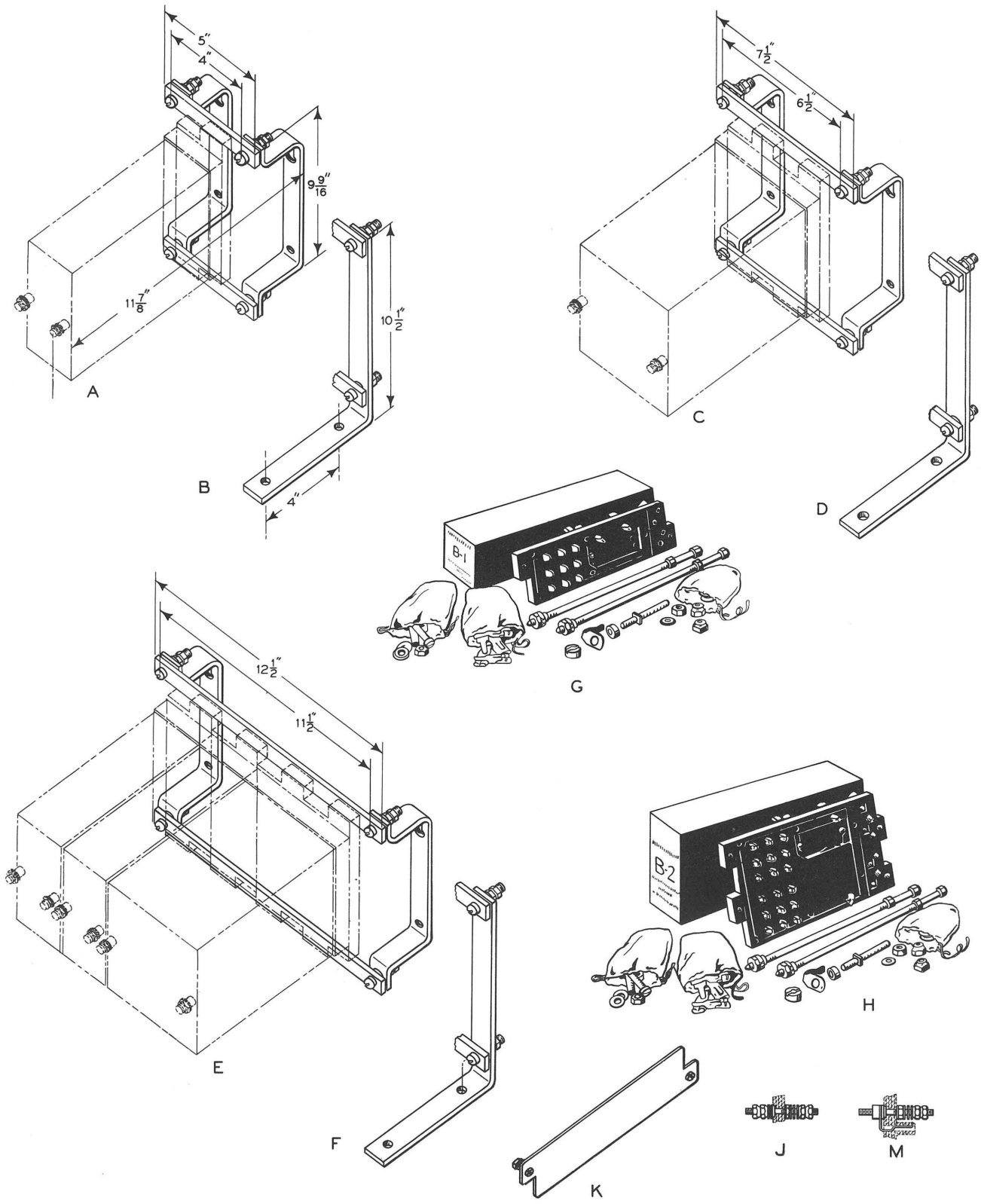

Individual relay mountings and plugboards.

Individual Relay Mountings and Plugboards For Type B Relays

To order rack mountings for installation in cases and housings, see catalog sections on cases and housings.

Order by catalog number and name shown in bold type

REF.	NAME	CATALOG NUMBER
A	**Relay Mounting,** for wall mounting one Size 1 relay. Does not include plugboard	A62-500
B	As above, except for shelf mounting	A62-501
C	**Relay Mounting,** for wall mounting two Size 1 relays or one Size 2 relay. Does not include plugboards	A62-502
D	As above, except for shelf mounting	A62-503
E	**Relay Mounting,** for wall mounting two Size 1 relays and one Size 2 relay; or two Size 2 relays; or four Size 1 relays. Does not include plugboards	A62-504
F	As above, except for shelf mounting	A62-505
G	**Plugboard Kit,** for all Size 1 relays, except approach relays, includes plugboard, two relay-mounting guide rods, terminals, clips, insulators, current test terminal, and mounting hardware. Does not include voltage test post Ref. J	A62-506
H	**Plugboard Kit,** for all Size 2 relays except vane relays and VTB relays, includes plugboard, two relay-mounting guide rods, terminals, clips, insulators, current test terminal and mounting hardware. Does not include voltage test post Ref. J.	A62-508
H1	As above, except for vane relay	A62-509
H2	Same as Ref. H, except for VTB relay and includes two current test terminals and two voltage test terminals	A62-510
J	**Voltage Test Terminal Kit,** fits plugboards for all Type B relays, except Type VTB	A62-515
K	**Filler Plate Kit,** with mounting hardware	A62-520
M	**Current Test Terminal Kit,** fits plugboards for all Type B relays, except Type VTB	A62-525

Memoranda

Plugboard Details

Note: Plugboards are not furnished assembled except in factory wired relay racks or housings.

For application of Type B relays in Welded Steel Cases and Housings, see Catalog Section 5.

For individual relay mountings, see Assemblies Catalog Section 62.

Order by catalog number and name shown in bold type

REF.	NAME	CATALOG NUMBER
A	TERMINAL BOARD COMPLETE, with fourteen terminal posts, nuts and washers, also mounting hardware	P62-680
B	TERMINAL BOARD COMPLETE, includes thirty-five terminal posts with nuts and washers, also mounting hardware	P62-679
C	PLUGBOARD COMPLETE, for all Type B, Size 1 relays, except approach, includes clips Ref. 1; insulators Ref. 2; terminals Ref. 3; relay mounting studs with nuts and washers, Refs. 4, 5, 6, 8, 9; plugboard Ref. 7; test post Ref. F; mounting bolts, nuts and washers Refs. 20, 21, 22 and 23. Does not include registration plates, see page 60. If voltage post Ref. E is required, same must be ordered separately - see below.	A62-506
C1	As above, except for approach relay	A62-507
D	PLUGBOARD COMPLETE, for all Type B, Size 2 relays and code transmitters except B2 Vane, includes clips Ref. 1; insulators Ref. 2; terminals Ref. 3; relay mounting studs with nuts and washers Refs. 4, 5, 6, 8, 9; plugboard Ref. 19, test post Ref. F, mounting bolts, nuts and washers Refs. 20, 21, 22 and 23. Does not include registration plates, see page 60. If voltage post Ref. E and terminal block Ref. 10 are required, same must be ordered separately - see below.	A62-508
D1	As above, except for Type B, Size 2, Vane relay	A62-509
E	VOLTAGE POST COMPLETE, includes screw, nuts, washers and eyelet, for taking coil voltage.	A62-515
F	TEST POST COMPLETE, includes screw, nuts, washers, and connector, for opening coil circuit	A62-525
1	CLIP, for holding insulator in place	P62-305
2	INSULATOR, for holding terminal Ref. 3 in position on plugboard . .	P62-457
3	TERMINAL, two required per insulator	P62-466
4	NUT, knurled, for holding relay to plugboard	P62-144
5	STUD, for holding relays to plugboards.	P62-346
6	NUT, for locking nut Ref. 4.	P62-166
7	PLUGBOARD, only, for all Type B, Size 1 relays except approach. Does not include terminals, insulators, test posts or mounting screws	P62-572

Plugboard Details

Order by catalog number and name shown in bold type

REF.	NAME	CATALOG NUMBER
7A	As above, except for approach relay	P62-573
8	WASHER, for nut Ref. 9.	P62-358
9	NUT, Elastic Stop, for holding stud Ref. 5	P62-320
10	TERMINAL BLOCK COMPLETE	P62-339
11	SCREW, for mounting terminal block.	P62-596
11A	WASHER, lock, for above	P62-403
12	SCREW, used as terminal post for test and voltage posts	P62-107
13	NUT, for terminal posts.	P62-333
14	WASHER, for terminal posts	P76-108
15	NUT, hex., for terminal posts	P76-131
16	NUT, spanner, for terminals	P62-129
17	CONNECTOR, for test terminals	P62-190
18	BUSHING, insulating, for screws Ref. 12	P62-203
19	PLUGBOARD, only, for all Type B, Size 2 relays, does not include terminals, insulators, test post or mounting screws.	P62-571
20	SCREW, for mounting plugboards.	P62-448
21	WASHER, for screw Ref. 20	P85-50
22	WASHER, lock, for nut Ref. 23	P81-121
23	NUT, for screws Refs. 20 and 25.	P62-167
24	PLATE, filler for blank spaces.	P62-331
25	SCREW, for filler plate	P62-449
25A	NUT, for above	P62-167
25B	WASHER, lock, for above	P81-121
26	CONNECTOR, 1" centers	P76-110
27	BOARD, designation, two required per horizontal row of terminal boards Ref. A. Includes mounting hardware. Specify lettering required	P62-682
27A	BOARD, designation, single, without lettering.	P62-766
28	BOARD, designation, two required per horizontal row of terminal boards Ref. B. Includes mounting hardware. Specify lettering required	P62-681
28A	BOARD, designation, single, without lettering.	P62-767
29	SLEEVE	P62-298

CATALOG SECTION P71
PARTS LIST
Electric Car Retarder
Types E1, E1H, E1HS and E160

Contents **Page**

Chairs	9
Circuit Controllers	24 & 28
Contactor Panels	34 & 36
Cross Bars	10
Gearing	20
Levers	10
Mechanisms	12
Motors and Brakes	30
Plates, shimming	10
Retarder Assembly	2
Rods, operating	10
Spring Rods	10
Tools	44

GENERAL RAILWAY SIGNAL COMPANY
A UNIT OF GENERAL SIGNAL CORPORATION
ROCHESTER NEW YORK 14602
PRINTED IN U.S.A.

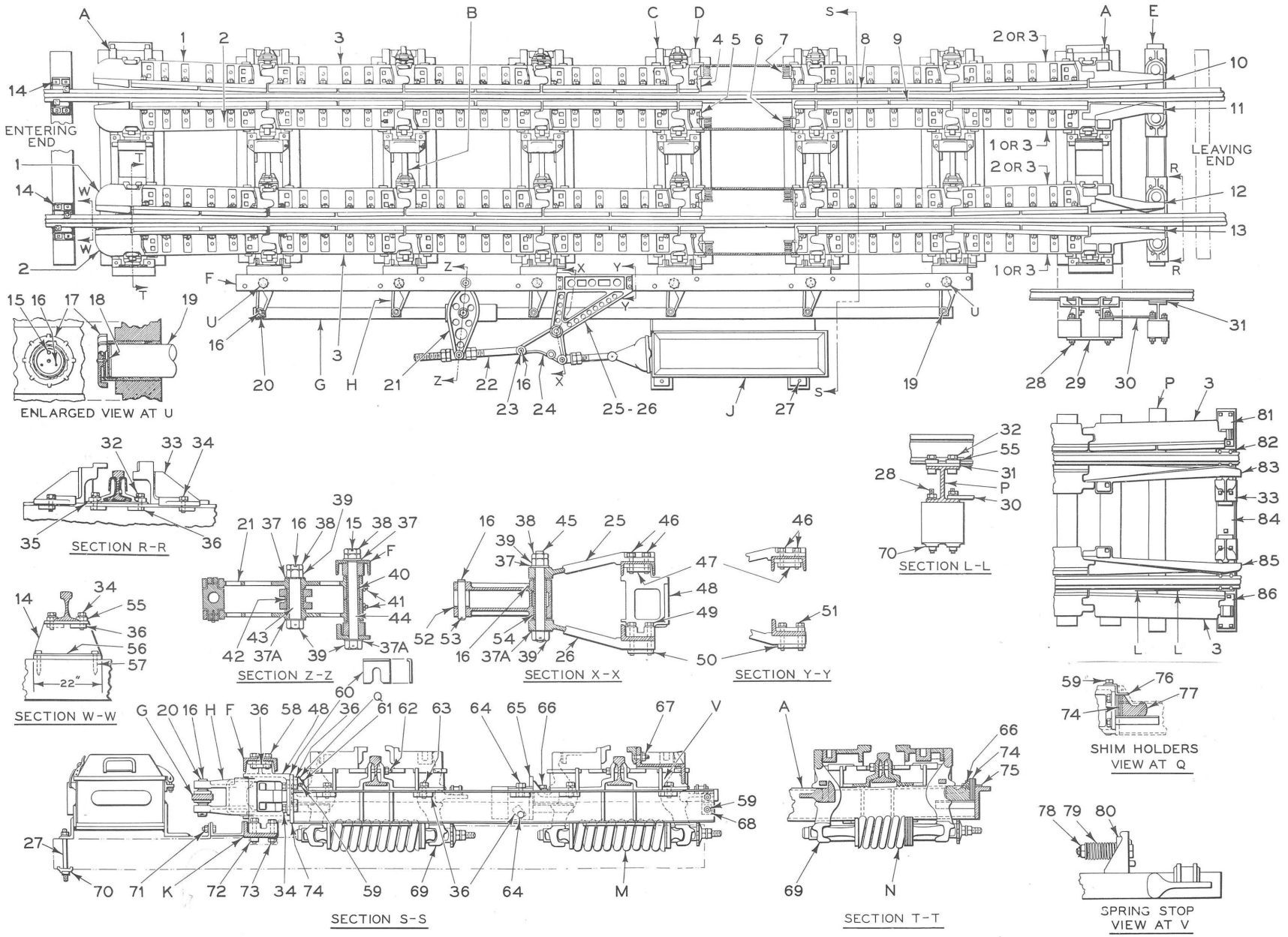

Types E1, E1H, E1HS and E160 car retarders.

Types E1, E1H, E1HS and E160 Car Retarders

Parts List

Order by catalog number and name shown in bold type

REF.	NAME	CATALOG NUMBER
A	BEAM COMPLETE, inert, for each end of retarder	P71-552
B	CROSS BAR COMPLETE, for references see page 10	
C	BEAM COMPLETE left-hand, intermediate	P71-551
D	BEAM COMPLETE, right-hand intermediate.	P71-550
E	BEAM COMPLETE, for supporting short flange guides and supports, for 130, 131 and 132 lb. R.E. rail	P71-553
E1	As above, except for 105 lb. Dudley, 115 lb. R.E. and 119 lb. CF&I rail	P71-554
E2	Same as Ref. E., except for 127 lb. Dudley rail	P71-555
E3	Same as Ref. E., except for 140 lb. R.E. rail.	P71-556
F	CHANNEL BAR COMPLETE, for five beam retarder	P71-573
F1	As above, except for seven beam retarder with mechanism in center.	P71-572
F2	Same as Ref. F, except for eight beam retarder with mechanism opposite No. 4 beam	P71-575
F3	Same as Ref. F, except for seven beam retarder with mechanism opposite No. 5 beam	P71-576
F4	Same as Ref. F, except for eight beam retarder	P71-570
F5	Same as Ref. F, except for nine beam retarder	P71-571
G	OPERATING BAR COMPLETE, with bushings, for five beam retarder	P71-591
G1	As above, except for seven beam retarder	P71-590
G2	Same as Ref. G, except for seven beam retarder with mechanism in center	P71-594
G3	Same as Ref. G, except for eight beam retarder	P71-589
G4	Same as Ref. G, except for eight beam retarder with mechanism opposite No. 4 beam	P71-593
G5	Same as Ref. G, except for nine beam retarder	P71-592
H	CRANK COMPLETE, operating.	P71-486
J	MECHANISM COMPLETE, for references see page 12	
K	ANGLE BAR COMPLETE, includes channel for mounting mechanism, for five beam retarder	P71-565
K1	As above, except for seven beam retarder	P71-566
K2	Same as Ref. K, except for seven beam retarder with mechanism in center	P71-569
K3	Same as Ref. K, except for eight beam retarder with mechanism opposite No. 5 beam.	P71-567
K4	Same as Ref. K, except for eight beam retarder with mechanism opposite No. 4 beam.	P71-574
K5	Same as Ref. K, except for nine beam retarder	P71-568

Types E1, E1H, E1HS and E160 Car Retarders

Parts List

Order by catalog number and name shown in bold type

REF.	NAME	CATALOG NUMBER
M	SPRING ROD COMPLETE, intermediate, for references see page 10	
N	SPRING ROD COMPLETE, for use at ends of retarder, for references see page 10	
P	BEAM COMPLETE, for supporting long flange guides, does not have bearings supports for flange guides, for 130, 131, 132 and 136 lb. R. E. rail	P71-557
P1	As above, except for 119 lb. CF&I, 105 lb. Dudley and 115 lb. R. E. rails	P71-558
P2	Same as Ref. P, except for 127 lb. Dudley rail	P71-555
1	SHOE BEAM, end, for use on outside of far rail and inside of near rail on entering end of retarder. Note: When flange guides Refs. 11 and 12 or 83 and 85 are not used, shoe beam Ref. 1 is used on inside of far rail and outside of near rail on leaving end of retarder.	P71-218
2	SHOE BEAM, end, for use on inside of far rail and outside of near rail on entering end of retarder Note: When flange guides Refs. 11 and 12 or 83 and 85 are not used, shoe beam Ref. 2 is used on outside of far rail and inside of near rail on leaving end of retarder.	P71-219
3	SHOE BEAM, intermediate. Note: When flange guides Refs. 11 and 12 are used, this shoe beam is used in all positions except on entering end of retarder. This shoe beam is also used in leaving end of retarder when long flange guides Refs. 83 and 85 are used.	P71-469
4	CHAIR, outside. For references see page 9	
5	CHAIR, inside. For references see page 9	
6	SPRING, coil, heavy, painted black, for use on near side of each rail.	P71-159
7	SPRING, coil, light, painted gray, for use on far side of each rail . .	P71-158
8	SHOE, outside, 4" high, 2" above rail	P71-531
8A	As above, except 4-1/2" high, 2-1/2" above rail	P71-529
9	SHOE, inside, cast steel #50	P71-532
9A	As above, except cast steel #43	P71-530
10	SUPPORT, right hand, for flange guide	P71-232
11	GUIDE, flange, right hand	P71-233
12	GUIDE, flange, left hand	P71-234
13	SUPPORT, left hand, for flange guide	P71-231
14	PEDESTAL, for supporting rails on end ties. For 105 lb. Dudley, 115 lb. R. E. and 119 lb. CF&I rails	P71-214

Types E1, E1H, E1HS and E160 Car Retarders

Parts List

Order by catalog number and name shown in bold type

REF.	NAME	CATALOG NUMBER
14A	As above, except for 132, 136 lb., 140 lb. R. E. rail and 127 lb. Dudley rail	P71-215
14B	Same as Ref. 14, except for 127 lb. Dudley rail with insulated joint.	P71-216
14C	Same as Ref. 14, except for 132, 136 and 140 lb. R. E. rail with insulated joint	P71-217
15	OILER, straight, 1/4" thread, for pin Ref. 19 and stud Ref. 44	P71-327
16	OILER, straight, 1/8" thread, for pins Refs. 19 and 23, for studs Refs. 43 and crank Ref. 24	P85-378
17	CAP, for pin Ref. 19	P71-369
18	RING, for pin Ref. 19	P71-182
19	PIN, 18-1/4" long, for fastening operating crank to channel	P71-136
20	PIN, 8-15/16" long, for fastening operating crank to operating bar	P71-611
21	LEVER COMPLETE, for driving operating bar. For references see page 10	
22	ROD COMPLETE, adjusting. For references see page 10	
23	PIN, 2-1/2" x 9-1/4", for fastening adjusting rod to crank.	P71-153
23A	SHIM, 4-1/2" O. D. x 2-9/16" I. D. for above	P71-140
24	CRANK, bell, for operating rod	P71-441
25	BRACKET, upper bearing	P71-585
26	BRACKET, lower bearing	P71-584
27	ROD, 1" -8 x 14" long, threaded both ends, for mounting mechanism	P71-310
27A	NUT, square, for above	P71-102
27B	NUT, hex., for above	P3-105
27C	WASHER, lock, for above	P71-106
28	ROD, 1" - 8 x 15" long, threaded both ends, for fastening plates Refs. 29 and 31 and channels to ties.	P71-309
28A	ROD, 1" - 8 x 13-3/4" long	P71-311
28B	NUT, square, for above	P71-102
28C	NUT, hex., for above	P3-105
28D	WASHER, lock, for above	P71-106
29	PLATE, for fastening ties together	P71-341
30	STRAP, tie, for ties beneath flange guides	P71-394
31	PLATE, for shimming up rail height of flange guides and supports. For references see page 10	
32	BOLT, 1" - 8 x 4-1/4" hex. hd., for rail clips	P71-431
32A	WASHER, lock, for above	P71-106
33	BEARING, for supports	P71-203

Types E1, E1H, E1HS and E160 Car Retarders

Parts List

Order by catalog number and name shown in bold type

REF.	NAME	CATALOG NUMBER
34	BOLT, 1" - 8 x 3-1/4" hex. hd., for fastening bearings Ref. 33 to beams, also for rail clips	P71-434
34A	WASHER, lock, for above	P71-106
35	PLATE, 1/2" thick, for shimming up insulated joint to height of flange guides and supports, for 115 lb. R. E. rail and 105 lb. Dudley rail	P71-293
35A	As above, except 1/8" thick, for 127 lb. Dudley rail	P71-292
35B	Same as Ref. 35 except 5/8" thick, for 105 lb. Dudley rail.	P71-296
36	NUT, strap, single, 3-1/4" long.	P71-561
37	WASHER, upper, plain, for nuts Refs. 38 and 39	P71-141
37A	WASHER, lower, plated, for nut Ref. 39	P71-142
38	NUT, 2" - 8 x 1-1/8" hex., for studs Refs. 43, 44, and 45	P71-545
39	NUT, 2" - 8 x 2" thick, hex., for studs Refs. 43, 44, and 45	P71-544
39A	COTTER, for above	P71-103
40	BUSHING, for stud Ref. 44.	P71-186
41	OILER, 67-1/2 degree, 1/8" threads, for lever Ref. 21	P50-753
42	BUSHING, for stud Ref. 43.	P71-185
43	STUD COMPLETE, 16-3/8" long, for bearing for operating bar in lever, includes lower nut Ref. 39, two washers Ref. 37A, and cotter Ref. 39A	P71-586
44	STUD COMPLETE, 24-13/16" long, for fastening lever to channel bar and angle bar, includes lower nut Ref. 39, two washers Ref. 37A and cotter Ref. 39A	P71-588
45	STUD COMPLETE, 21-7/8" long, for bearing, for operating bar in lever, includes lower nut Ref. 39, two washers Refs. 37A and cotter Ref. 39A	P71-587
46	BOLT, 1" - 8 x 3-3/4" hex. hd., for fastening upper bearing bracket to channel	P71-430
46A	WASHER, lock, for above	P71-106
47	NUT, strap, double, 3-1/2" centers	P71-560
48	BEARING, for operating crank	P71-224
49	BOLT, 1" - 8 x 7" hex. hd., for fastening bracket Ref. 26 to bearing.	P71-437
49A	WASHER, lock, for above	P71-106
50	NUT, strap, double, 4-1/4" centers, for bolts Refs. 49 and 51	P71-559
51	BOLT, 1" - 8 x 5-1/2" hex. hd., for fastening bracket Ref. 26 to bearing	P71-436
51A	WASHER, lock, for above	P71-106
52	WASHER, shim, 4" O. D. x 2-1/16" I. D., for pin Ref. 53	P71-139
53	PIN, 2" dia. x 9-1/4" rd. hd., for fastening mechanism throw bar to crank	P71-152

Types E1, E1H, E1HS and E160 Car Retarders

Parts List

Order by catalog number and name shown in bold type

REF.	NAME	CATALOG NUMBER
54	BUSHING, for stud Ref. 45	P71-187
55	CLIP, rail.	P71-404
56	PLATE, 8" x 17", 3/4" thick, for use under pedestal Ref. 14 to level tie when insulated joint is used	P71-287
56A	As above, except 5/8" thick.	P71-300
56B	Same as Ref. 56, except 8" x 22", 3/4" thick	P71-299
56C	Same as Ref. 56B, except 5/8" thick.	P71-301
57	SCREW, lag, 1" x 6", for mounting pedestal.	P71-613
58	BOLT, 1" - 8 x 3" hex. hd., for fastening channel to bearing.	P71-439
59	BOLT, 3/4" - 10 x 2" hex. hd., for fastening spacer Ref. 68 to beam	P71-163
59A	NUT, for above	P76-105
59B	WASHER, lock, for above.	P71-100
60	SHIM, 1/8" thick, for use between ends of beams and bearings Ref. 48	P71-639
60A	As above, except 1/16" thick	P71-640
60B	Same as Ref. 60, except 1/32" thick	P71-641
61	ANGLE, for holding shims	P71-638
62	BOLT, track, 1" - 8 x 5-1/2" long, with hex. nut.	P71-212
62A	As above, except 6" long	P71-213
62B	WASHER, lock, for bolts Refs. 62 and 62A	P71-106
63	BOLT, 1" - 8 x 2-3/4" hex. hd., for fastening chairs to beams	P71-433
63A	WASHER, lock, for above	P71-106
64	BOLT, 1" - 8 x 2-1/2" hex. hd., for fastening bracket Ref. 65 to beam	P71-438
64A	WASHER, lock, for above	P71-106
65	BRACKET, for bearing Ref. 77, 6-1/16" wide, for use with cross bar shown on page 10 Ref. C1	P71-205
65A	As above, except 6-1/2" wide, for use with cross bar shown on page 10 Ref. C	P71-206
66	BOLT, 1/2" - 13 x 1-1/2" hex. hd., for plate Ref. 75	P71-101
66A	WASHER, lock, for above	P50-101
67	BOLT, 1" - 14 x 3-1/8" tee hd., for fastening shoes to shoe beam.	P71-487
67A	As above, except 1" - 8 x 3-1/4" long	P71-488
67B	NUT, for bolt Ref. 67	P71-104
67C	NUT, for bolt Ref. 67A.	P3-105
67D	WASHER, lock, for above	P91-229
68	SPACER, end support for cross bars	P71-204
69	LEVER, only, for all retarders except Type E160	P71-563

Types E1, E1H, E1HS and E160 Car Retarders

Parts List

Order by catalog number and name shown in bold type

REF.	NAME	CATALOG NUMBER
69A	As above, except for Type E160 retarders	P71-564
70	WASHER, 1", O. G., for bolts Refs. 27 and 28.	P71-374
71	BOLT, 1" - 8 x 2-3/4" hex. hd., for fastening mechanism to channel and angle bar	P71-432
71A	NUT, for above	P3-105
71B	WASHER, lock, for above.	P71-106
72	NUT, strap, single, 5" long, for bolt Ref. 73	P71-562
73	BOLT, 1" - 8" x 5" hex. hd., for fastening bearings	P71-435
73A	NUT, for above	P3-105
73B	WASHER, lock, for above.	P71-106
74	SHIM, .119" thick, for bearing	P71-352
74A	As above, except 1/4" thick.	P71-353
75	PLATE, for holding shims	P71-116
76	RETAINER, for shims	P71-632
77	BEARING, for fixed lever.	P71-202
78	BOLT, 1" - 8 x 6" hex. hd., for spring.	P71-440
78A	NUT, for above	P71-351
78B	COTTER, for above	P91-231
79	SPRING, for cross bars.	P71-160
80	STOP, for cross bars	P71-237
81	BRACKET COMPLETE; right-hand.	P71-617
82	PLATE, tie, 8" x 9", 1-3/8" thick, for use with 132 lb. R. E. rail. .	P71-117
82A	As above, except 1-3/16" thick, for 136 lb. R. E. rail.	P71-121
82B	Same as Ref. 82, except 1-1/2" thick, for 127 lb. Dudley rail	P71-119
82C	Same as Ref. 82 except 1-1/16" thick, for 119 lb. CF&I rail	P71-120
82D	Same as Ref. 82 except 2-1/2" thick, for 105 lb. Dudley rail	P71-122
83	GUIDE, flange, right hand, for long rerailer	P71-235
84	PLATE, tie, 4' - 0" long	P71-118
85	GUIDE, flange, left hand, for long rerailer	P71-236
86	BRACKET COMPLETE, left-hand	P71-616

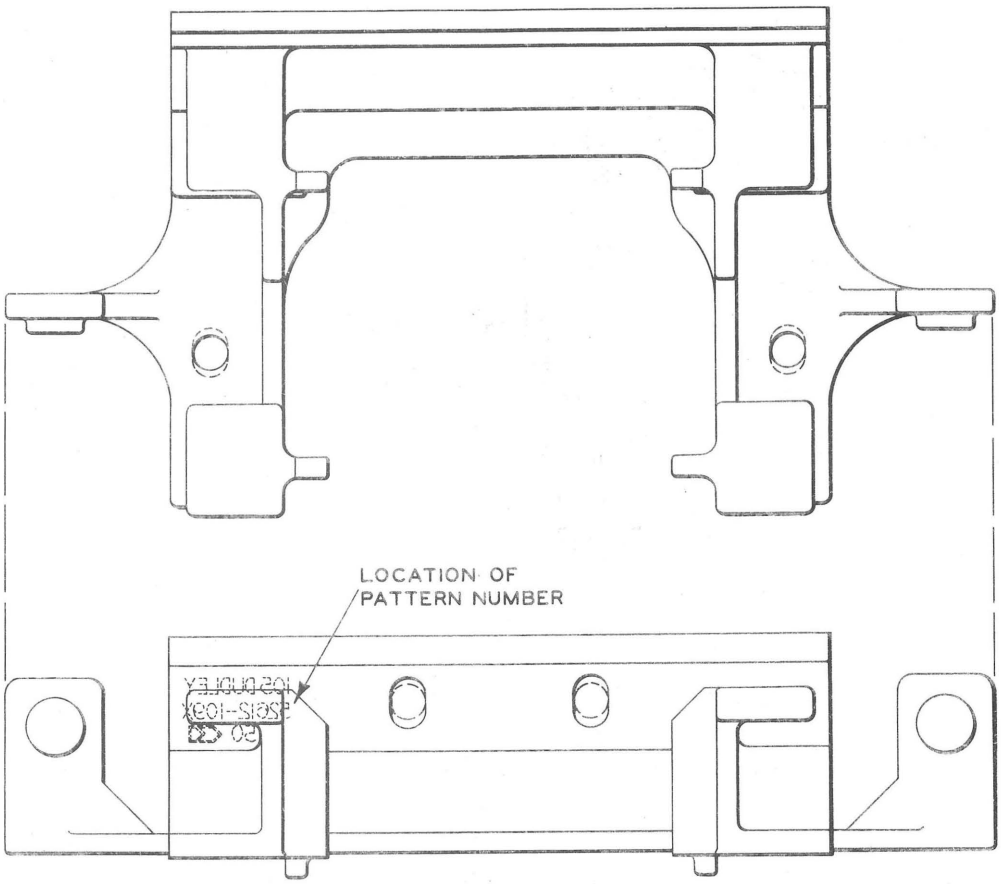

1. CHAIR, OUTSIDE
2. CHAIR, INSIDE

Chairs for Car Retarders

Parts List

Order by catalog number and name shown in bold type

REF.	NAME	CATALOG NUMBER
1	CHAIR, outside, has pattern number 52612-64 X A - or 90 X A in raised letters at location shown in illustration	P71-470
1A	As above except pattern number 52612-74 X B - or 104 X	P71-478
1B	Same as Ref. 1 except pattern number 52612-92 X A	P71-474
1C	Same as Ref. 1 except pattern number 52612-102 X	P71-476
1D	Same as Ref. 1 except pattern number 52612-106 X	P71-480
2	CHAIR, inside, has pattern number 52612-65 X B in raised letters at location shown in illustration	P71-471
2A	Same as Ref. 2, except pattern number 52612-75 X B or - 105 X . . .	P71-479
2B	Same as Ref. 2, except pattern number 52612-88 X	P71-473
2C	Same as Ref. 2, except pattern number 52612-103 X.	P71-477
2D	Same as Ref. 2, except pattern number 52612-107 X.	P71-481

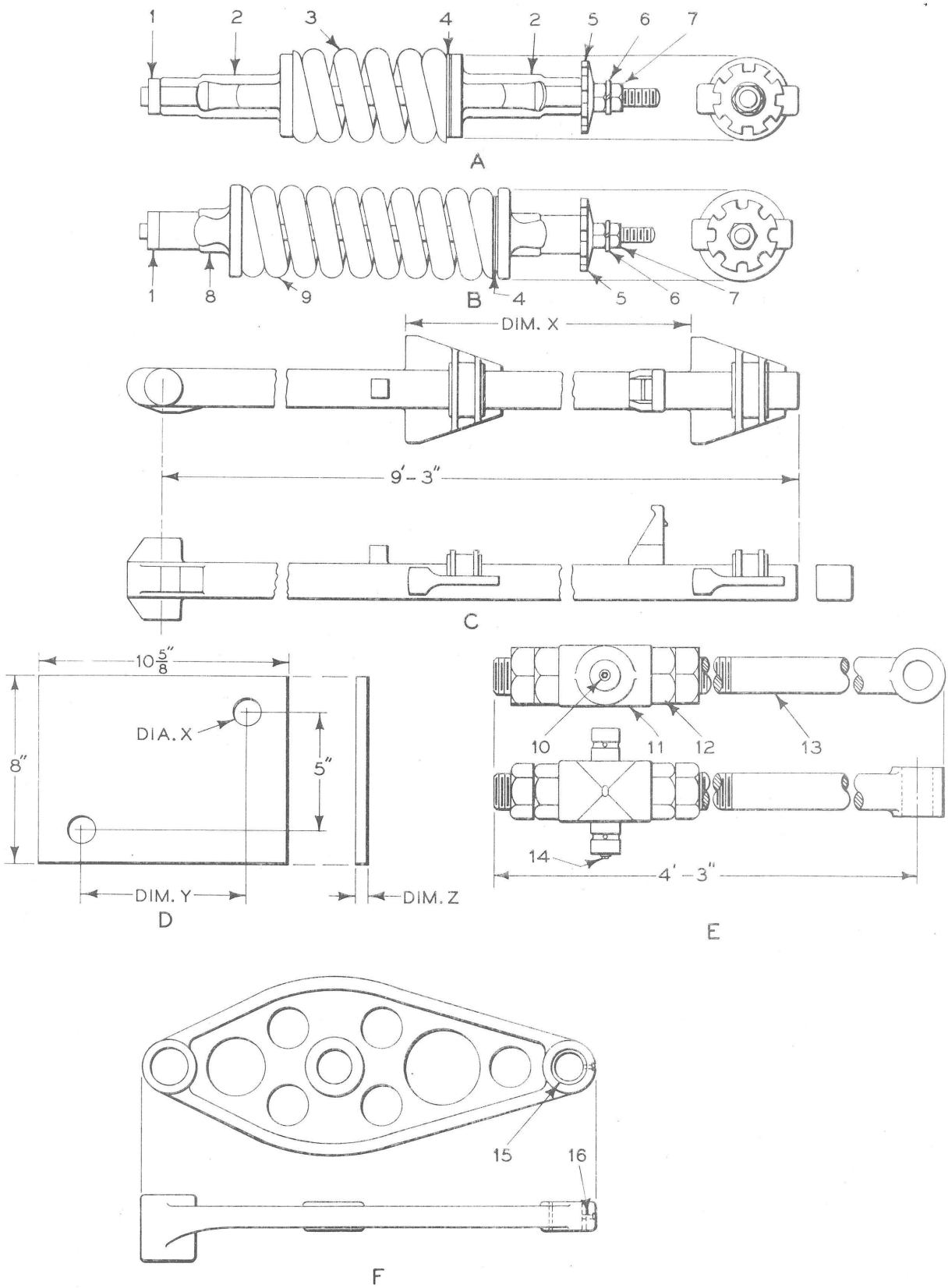

Details parts for car retarders.

Detail Parts for Car Retarders

Parts List

Order by catalog number and name shown in bold type

REF.	NAME	CATALOG NUMBER
A	SPRING ROD COMPLETE, for entering, leaving and inert sections . . .	P71-460
B	SPRING ROD COMPLETE, for intermediate sections	P71-457
B1	As above, except with lighter spring, for retarders handling empty cars	P71-458
C	CROSS BAR COMPLETE, Dim. "X" = 4' -11 13/32"	P71-578
C1	As above, except Dim. "X" = 4' -11".	P71-577
	PLATE, for shimming up rail height of flange guides and supports. See tabulation below:	

	DIM "X"	DIM "Y"	DIM "Z"	Type of Rail	
D	1-3/16"	7"	1/2"	115 lb. R.E. and 119 lb. CF&I	P71-288
D1	"	"	5/8"	115 lb. R.E.	P71-289
D2	"	"	3/4"	119 lb. CF&I	P71-295
D3	"	"	7/16"	119 lb. CF&I	P71-302
D4	"	"	1"	105 lb. Dudley	P71-294
D5	"	7-5/8"	3/16"	136 & 140 lb. R.E.	P71-297
D6	"	"	1/4"	136 & 140 lb. R.E.	P71-298
D7	"	"	5/8"	131 & 132 lb. R.E.	P71-290
D8	"	7-7/8"	3/4"	127 lb. Dudley	P71-291

E	ROD COMPLETE, adjusting	P71-582
F	LEVER COMPLETE, for driving operating bar	P71-583
1	ROD COMPLETE, for spring rods Refs. A, B, and B1.	P71-459
2	SEAT, spring, for spring rod Ref. A	P71-580
3	SPRING, for spring rod Ref. A	P71-157
4	WASHER, shim, .104" thick, for use between spring and seat	P71-143
4A	As above, except .209" thick.	P71-147
5	NUT, flange.	P71-350
6	WASHER, lock, for nut Ref. 5	P71-110
7	NUT, 1-1/2" -6 hex. for rods	P71-349
8	SEAT, for spring rod Ref. B	P71-579
9	SPRING, heavy, for spring rod Ref. B	P71-156
9A	As above, except light spring for rod Ref. B1.	P71-161
10	OILER, for trunnion Ref. 11	P85-378
11	TRUNNION, for rod	P71-485
12	NUT, 3" x 3-1/2" hex., for rod	P71-490
13	ROD, only.	P71-499
14	PIPE PLUG, 1/8"	P85-131
15	BUSHING, for lever	P71-184
16	SCREW, drive, for bushing	P71-534

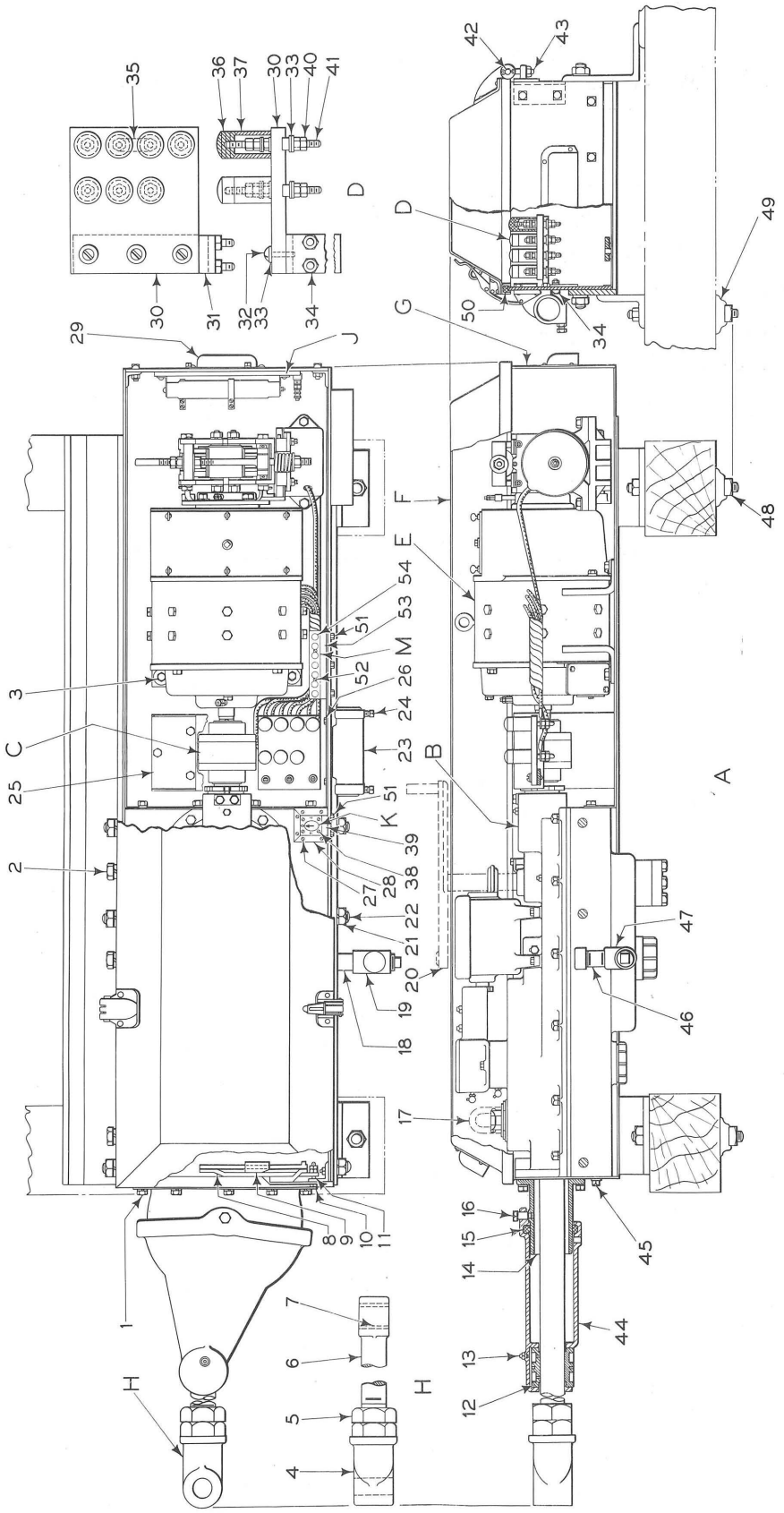

Mechanisms for car retarders.

Mechanisms for Car Retarders

Parts List

Order by catalog number and name shown in bold type

REF.	NAME	CATALOG NUMBER
A	MECHANISM COMPLETE, equipped with 230 volt, direct-current motor, having series-type brake with sintered linings. For use with Types E1, E1H, and E1HS retarders. This mechanism is also a replacement for 52490-3 Gr. 1 and -3 Gr. 5 mechanisms used with Type E retarders . . .	P71-442
A1	As above, except with cams in controller to indicate positions, 0, 2, and 4 of the retarder. This mechanism is also a replacement for 52490-3 Gr. 7 mechanism used with Type E retarders	P71-444
A2	Same as Ref. A, except with shunt-type brake with sintered linings. This mechanism is also a replacement for 52490-3 Gr. 2, -3 Gr. 4, and -3 Gr. 6 mechanisms used with Type E retarders	P71-443
A3	MECHANISM COMPLETE, equipped with 230 volt, direct-current motor, having series-type brake with sintered linings. For use with Type E160 retarders.	P71-445
A4	As above, except with shunt-type brake with sintered linings	P71-446
A5	Same as Ref. A3, except with cams in controller to indicate all positions of the retarder and also with provision for local-manual control	P71-447
B	MECHANISM COMPLETE, inner, for references see page 16	
C	COUPLING COMPLETE, universal, for references see page 16	
D	BOARD COMPLETE, with seven terminals and bracket for mounting. . .	P71-407
E	MOTOR COMPLETE, for references see page 30	
F	COVER COMPLETE, for case	P71-421
G	CASE COMPLETE, for mechanism, includes cover, ventilation and support parts Refs. 8, 9, 10, and 11	P71-603
H	ROD COMPLETE, throw, includes parts Refs. 4, 5, 6, 7, 12, 13, 14, 15, 16, and 44	P71-449
J	RESISTOR COMPLETE, 12.5 ohms.	P71-397
K	SWITCH COMPLETE, for local-manual control	P71-602
M	BLOCK COMPLETE, terminal	P71-631
1	SCREW, 1/2" - 13 x 1-3/4" hex. hd., for fastening flange to case in position shown	P71-180
1A	WASHER, lock, for screw Ref. 1	P50-101
2	BOLT, 1" -8 x 3" hex. hd., for fastening mechanism to case	P71-429
2A	NUT, hex, for above.	P91-226
2B	WASHER, lock, for above	P91-229
3	SCREW, 5/8" -11 x 1-1/2" hex. hd., for fastening motor to case. . . .	P87-108
3A	WASHER, lock, for above	P85-109
4	EYE, for rod Ref. 6	P71-581
5	NUT, 2-1/2" -4 hex., for throw rod	P71-489
6	ROD, throw, includes bushing Ref. 7	P71-510
7	BUSHING, for rod Ref. 6	P71-183

Mechanisms for Car Retarders

Parts List

Order by catalog number and name shown in bold type

REF.	NAME	CATALOG NUMBER
8	SUPPORT COMPLETE, for cover	P71-423
9	SLEEVE, for support Ref. 8	P71-400
10	BOLT, 1/2" -13 x 2-1/4" sq. hd., with hex. nuts, for fastening support to case	P71-336
11	BUSHING, for bolt Ref. 10	P71-155
12	BEARING, for throw rod	P71-536
13	OILER, for bearing Ref. 12	P85-378
14	FLANGE, for housing Ref. 44	P71-496
15	GASKET, 37-1/2" long, specify number feet	P71-367
16	SCREW, dowel, used as pivot for housing	P71-178
17	SCREW EYE, used for removing mechanism cover. When used, it is screwed into tapped hole after removing octagonal nut	P71-537
18	NIPPLE, 1-1/4" x 7-1/2"	P71-222
19	TEE, 1-1/4", for nipple	P71-108
20	CRANK, for manually operating mechanism	P71-398
21	NUT, 1" -8 hex., for rod Ref. 22	P91-226
21A	WASHER, lock, for above	P91-229
22	ROD, 1" x 2' -2", for fastening mechanism to retarder	P71-308
23	COUPLING COMPLETE, for 2" flexible conduit	P71-371
24	SCREW, Set, 3/8" -16 x 1", for coupling Ref. 23	P71-188
25	GUARD KIT, for coupling	P71-637
26	SCREW, 5/16" -18 x 3/4" hex, hd., for fastening coupling to case	P85-118
27	SCREW, for cover	P71-609
28	COVER, for switch	P71-396
29	HOOD, ventilator for cover and case	P71-285
29A	PLATE, for above	P71-378
29B	SCREEN, for above	P5-409
29C	SCREW, 5/8" long, for above	P71-346
29D	SCREW, 3/8" long, for above	P71-345
29E	NUT, for above	P85-561
30	TERMINAL BOARD, only, for Ref. D	P71-344
31	BRACKET, for terminal board	P71-379
32	SCREW, 3/8" -16 x 1-1/4" rd. hd., for fastening terminal board to bracket	P71-324
33	WASHER, for screw Ref. 32	P85-221
34	BOLT, 5/16" x 1-1/4" sq. hd., with hex. nut, for fastening terminal block to case	P71-382
34A	WASHER, lock, for above	P76-106

Mechanisms for Car Retarders

Parts List

Order by catalog number and name shown in bold type

REF.	NAME	CATALOG NUMBER
35	CONNECTOR, for terminal posts	P71-179
36	BUTTON, insulating, for shield Ref. 37	P71-315
37	SHIELD, insulating, for terminal posts	P71-376
38	SCREW, for switch	P71-114
39	BRACKET, for switch	P71-380
40	NUT, 3/8" -16 hex., for terminal posts	P71-366
41	TERMINAL POST, 3/8" -16, as shown	P71-386
42	PIN, 5/8" x 2-7/8", for hinging cover	P71-211
43	EYE BOLT, 5/8", for hinging cover	P71-181
43A	NUT, for above	P85-208
44	HOUSING, for throw rod	P71-497
45	SCREW, 1/2" -13 x 1-1/4" hex. hd., for fastening case to mechanism	P85-240
45A	WASHER, lock, for above	P50-101
46	CAP, for nipple Ref. 47	P71-325
47	NIPPLE, 1-1/4" x 3-1/2"	P71-223
48	ROD, 1" -8 x 14 long, threaded both ends, for mounting mechanism to ties	P71-310
48A	NUT, square, for above	P71-102
48B	NUT, hex. for above	P3-105
48C	WASHER, lock, for above	P71-106
49	WASHER, O. G, for 1" rod Ref. 48	P71-374
50	GASKET, 18 feet long, for cover Ref. F, Specify number of feet required	P71-368
51	SCREW, 1/4" -20 x 3/4" long, hex. hd., for mounting brackets Refs. 39 and 53	P50-131
51A	NUT, for above	P71-356
52	SCREW, No. 10 - 32 x 3/4", fil. hd., for mounting terminal block	P71-111
52A	NUT, for above	P71-355
53	BRACKET, for terminal block	P71-381
54	SHIELD, for terminal block Ref. M	P71-377
54A	BUTTON, for shield	P3-127

GENERAL RAILWAY SIGNAL COMPANY
February 1969

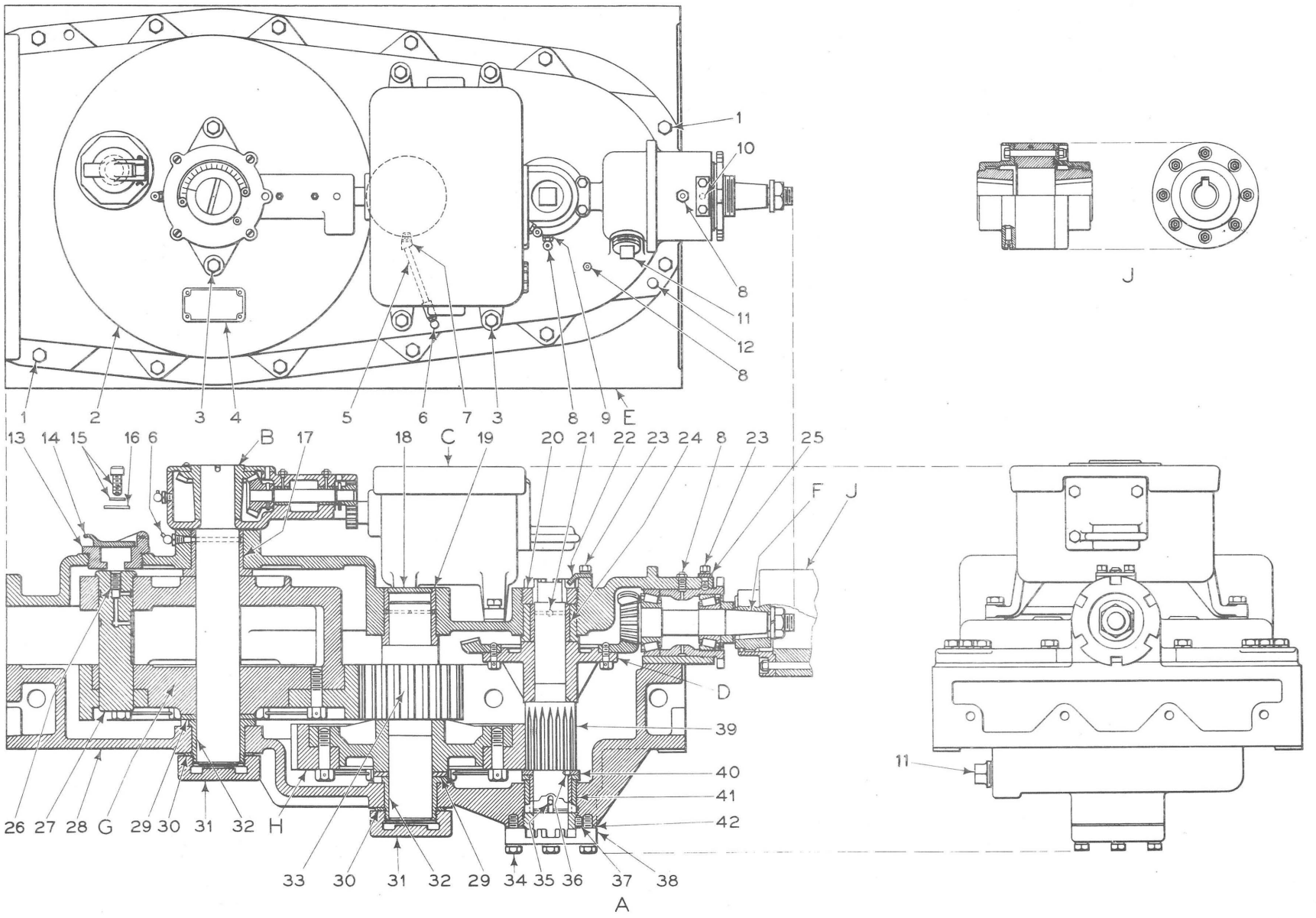

Mechanisms for car retarders.

Mechanisms for Car Retarders

Parts List

Order by catalog number and name shown in bold type

REF.	NAME	CATALOG NUMBER
A	MECHANISM COMPLETE, for mechanisms listed on page 12 Refs. A and A2, does not have indicating cams in controller	P71-453
A1	As above, except for mechanism listed on page 12 Ref. A1, has indicating cams in controller	P71-454
A2	Same as Ref. A, except for mechanism listed on page 12 Refs. A3 and A4, does not have indicating cams in controller	P71-455
A3	Same as Ref. A, except for mechanism listed on page 12 Ref. A5 has indicating cams in controller	P71-456
B	GEAR BOX COMPLETE, for references see page 20	
C	CONTROLLER COMPLETE, for references see page 24	
D	GEAR COMPLETE, for references see page 20	
E	CASE COMPLETE, includes the following Refs. 1, 1A, 2, 11, 12, 17, 18, 19, 21 and 32	P71-503
F	PINION COMPLETE, for references see page 20	
G	GEAR COMPLETE, for references see page 20	
H	GEAR COMPLETE, for references see page 20	
J	COUPLING, for motor	P71-448
1	SCREW, 5/8" -11 x 1-1/2" hex. hd., for fastening case to base	P87-108
1A	WASHER, lock, for above	P85-109
2	COVER, for case, includes plugs, pins and bushings Refs. 17, 18, and 19	P71-318
3	SCREW, 1/2" -13 x 1-1/4" hex. hd., for mounting controller and gear box	P85-240
3A	As above, except 1-1/2" long	P71-173
3B	WASHER, lock, for above	P50-101
4	NAME PLATE	P71-126
4A	SCREW, drive, for above	P50-830
5	EXTENSION, for oiler	P71-533
5A	WASHER, for above	P71-375
6	OILER	P50-753
7	ELBOW, for extension Ref. 5	P71-402
8	OILER	P85-378
9	ELBOW, for oiler Ref. 8	P71-401
10	SCREW, set, 3/8" -16 x 3/4", for locking adjustment of bevel gears	P71-239
11	PLUG, pipe, 1-1/4"	P30-176
12	PIN, taper No. 9 x 2", for fastening cover to case	P71-151
13	NUT, 3" -16, for cover	P71-406
14	COVER, for nut Ref. 13	P71-403

Mechanisms for Car Retarders

Parts List

Order by catalog number and name shown in bold type

REF.	NAME	CATALOG NUMBER
15	SCREW, set, for locking pin Ref. 27	P71-240
15A	WASHER, lock, for above	P85-802
16	WASHER, lock, for pin Ref. 27	P76-201
17	BUSHING, upper, bronze, for 2-1/2" dia. hole	P71-193
18	PLUG, 2-5/8" dia. for bushing Ref. 19	P71-175
19	BUSHING, upper, bronze, for 2-1/2" dia. hole	P71-195
20	NUT, for bushing Ref. 24 and 41	P71-538
21	PIN, dowel, 1/2" x 31/32" for bushing Ref. 24	P71-323
22	PLATE, used as lock for nut Ref. 20	P71-542
23	SCREW, 3/8" -16 x 7/8" hex. hd., for fastening plate to cover	P71-337
23A	WASHER, lock, for above	P81-122
24	BUSHING, upper, bronze, for 2" dia. hole	P71-642
25	PLATE, for set screw Ref. 10	P71-543
26	OILER, for pin Ref. 27	P71-328
27	PIN, for throw rod	P71-154
28	CASE, only, includes bushings Ref. 32	P71-491
29	WASHER, for shaft	P71-146
30	GASKET, for caps Ref. 31	P71-408
31	CAP, with raised center, for bushings Ref. 32	P71-428
32	BUSHING, lower, bronze, for 2-1/2" dia. hole	P71-194
33	PINION, for references see page 20	
34	SCREW, 1/2" -13 x 1-3/4" hex. hd., for fastening cap Ref. 38 to case.	P71-180
34A	WASHER, lock, for above	P50-101
35	PIN, 1/4" x 1-1/4", for fastening bushing Ref. 41 to case	P50-416
36	PIN, 3/16" x 5/16", for fastening washer Ref. 40 to shaft	P71-303
37	SCREW, set, 3/8" -16 x 1/2", for locking nut Ref. 20	P71-238
38	CAP, for locking nut Ref. 20	P71-539
39	PINION, for references see page 20	
40	WASHER, for pinion shaft	P71-145
41	BUSHING, lower, bronze, for 2" dia. hole	P71-614
42	GASKET, for cap Ref. 38	P71-198

Memoranda

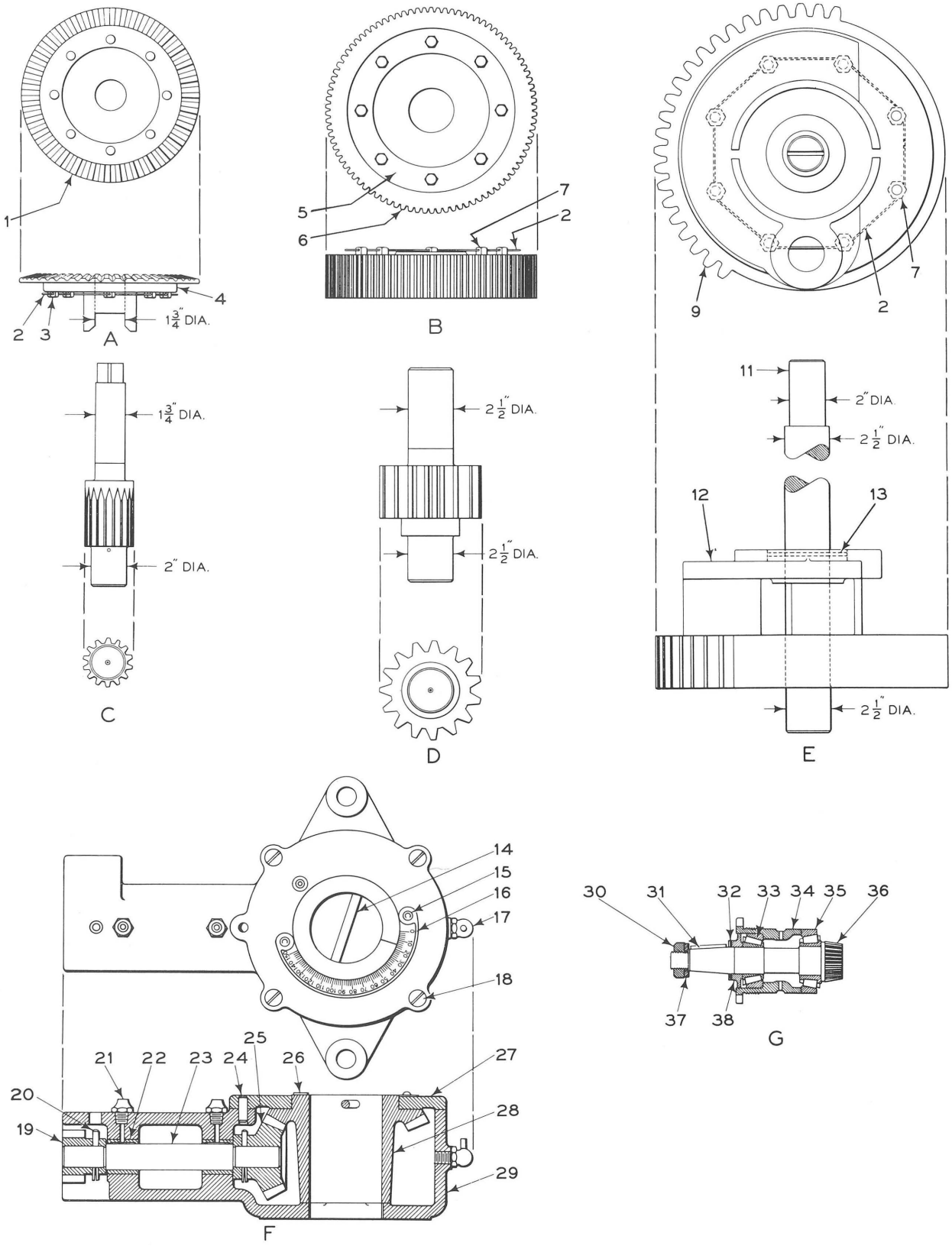

Gearing and gear box for mechanisms.

Gearing and Gear Box for Mechanisms

Parts List

Order by catalog number and name shown in bold type

REF.	NAME	CATALOG NUMBER
A	GEAR COMPLETE, has seventy 20° teeth	P71-464
B	GEAR COMPLETE, has eighty 20° teeth	P71-463
C	PINION, has fifteen 20° teeth, for bevel gear Ref. A	P71-527
D	PINION, has fifteen 20° teeth, for gear Ref. B	P71-528
E	GEAR COMPLETE, has twenty-three 20° teeth	P71-462
F	GEAR BOX COMPLETE	P71-498
G	PINION COMPLETE	P71-509
1	GEAR, only	P71-523
2	WIRE, No. 16, for locking screws. Specify number of feet	P71-650
3	SCREW, 3/8" -16 x 1" hex. hd., for fastening gear to hub	P71-171
4	HUB, for bevel gear	P71-493
5	HUB, for gear Ref. B	P71-495
6	GEAR, only	P71-524
7	SCREW, 5/8" -11 x 2-1/2" hex. hd., for fastening gear to hub	P71-172
9	GEAR, only, 23 teeth	P71-525
11	SHAFT, for gear Ref. 9	P71-522
12	HUB, for gear Ref. 9	P71-494
13	PIN, roll, for fastening hub to shaft	P71-229
14	PIN, for fastening gear to shaft	P71-189
15	SCREW, drive, for dial	P50-830
16	DIAL, for cover	P71-383
17	OILER	P85-379
18	SCREW, No. 14-24 x 1" fl. hd., for fastening cover to case	P71-105
19	PINION, for shaft	P71-319
20	PIN, for pinion	P71-150
21	OILER	P85-378
22	BUSHING	P71-334
23	SHAFT, for gear box	P71-521
24	PIN, dowel, for cover	P71-132
25	PINION, bevel, for shaft	P71-320
26	OILER	P71-326
27	COVER, for gear box	P71-329
28	GEAR, bevel	P71-330
29	CASE, only	P71-535
30	NUT, 1" -14 Hex., for shaft	P71-610
31	KEY, for fastening hub to shaft	P71-130

Gearing and Gear Box for Mechanisms

Parts List

Order by catalog number and name shown in bold type

REF.	NAME	CATALOG NUMBER
32	WASHER, 1/16" thick, five required	P71-148
32A	As above, except .005" thick, twelve required	P71-167
33	BEARING, for hub end of shaft	P71-197
34	SLEEVE, only	P71-541
35	BEARING, for pinion end of shaft	P71-196
36	PINION, only, 20° teeth	P71-526
37	WASHER, lock, for nut Ref. 30	P91-229
38	SPACER, only	P71-540

Memoranda

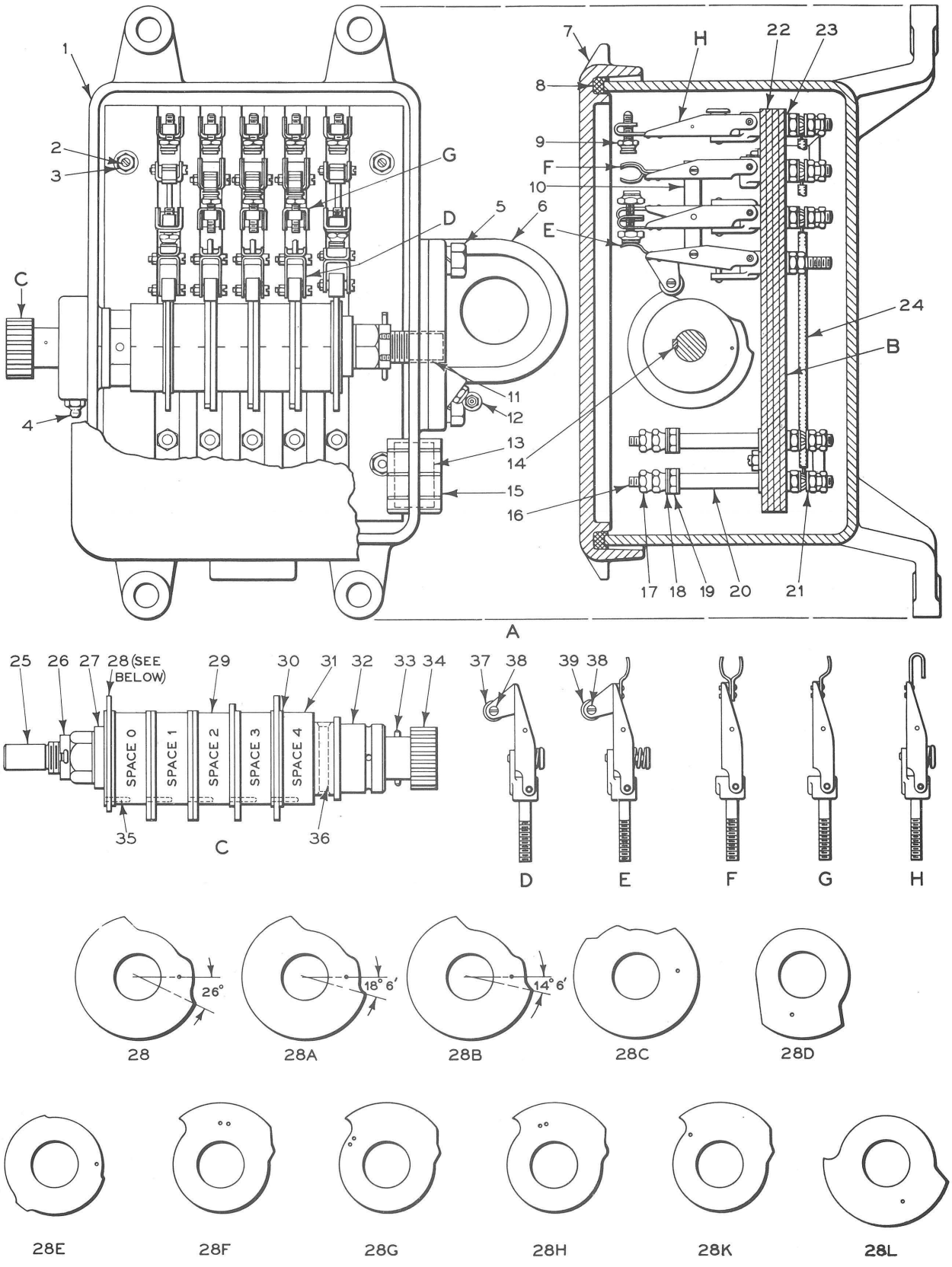

Master circuit controllers.

Master Circuit Controllers
Parts List

Order by catalog number and name shown in bold type

REF.	NAME	CATALOG NUMBER
A	CONTROLLER COMPLETE, for Types E1, E1H, and E1HS retarders. Does not have indicating cams, for mechanisms shown on page 12, Refs. A and A2	P71-465
A1	As above, except has cams for indicating positions 0, 2, and 4 of the retarder, for mechanism shown on page 12, Ref. A1	P71-466
A2	Same as Ref. A, except for Type E160 retarders. Does not have indicating cams, for mechanisms shown on page 12, Refs. A3 and A4	P71-467
B	BOARD COMPLETE, terminal, for controller Refs. A and A2	P71-425
B1	As above, except for controller Ref. A1	P71-426
C	SHAFT COMPLETE, cam, for controllers Ref. A	P71-504
C1	As above, except for controller Ref. A1	P71-505
C2	Same as Ref. C, except for controller Ref. A2	P71-506
D	FINGER COMPLETE, with steel roller	P71-389
E	FINGER COMPLETE, with insulated roller	P71-390
F	FINGER COMPLETE	P71-388
G	FINGER COMPLETE	P71-391
H	FINGER COMPLETE, for contacts Ref. 9	P71-387
1	CASE, only	P71-501
2	STUD, for mounting terminal board	P71-242
3	NUT, for stud	P62-333
3A	WASHER, for above	P76-108
4	OILER, for shaft	P85-378
5	BOLT, for mounting bearing	P71-107
5A	WASHER, lock, for above	P91-229
6	BEARING COMPLETE, with bushing Ref. 11	P71-500
7	COVER, only	P71-502
8	GASKET, for cover, 3' -0". Specify number feet required	P81-215
9	CONTACT, only	P71-364
10	CONNECTOR COMPLETE, include link, bolts and spacers	P71-422
11	BUSHING, for shaft	P71-333
12	OILER, for shaft	P85-379
13	NIPPLE, 1-1/4", for wire inlet	P71-373
14	KEY, for fastening collars to shaft	P71-129
15	BUSHING, 1-1/4", for nipple	P71-306
16	TERMINAL POST	P71-385
17	NUT, hex, for terminal posts	P76-131
18	WASHER, for terminal posts	P76-108
19	NUT, hex., for terminal posts	P62-333

Master Circuit Controllers

Parts List

Order by catalog number and name shown in bold type

REF.	NAME	CATALOG NUMBER
20	BUSHING, for terminal posts	P65-466
21	WASHER, lock, for terminal posts	P91-229
22	BOARD, only, for board Ref. B.	P71-343
22A	As above, except for board Ref. B1.	P71-338
23	BUS BAR, for board Ref. B	P71-168
24	CONNECTOR, 9-1/4" long	P71-358
24A	As above, except 7" long	P71-357
24B	Same as Ref. 24, except 5-3/4" long	P71-360
24C	Same as Ref. 24, except 3" long	P71-359
24D	Same as Ref. 24, except 7-1/2" long	P71-362
24E	Same as Ref. 24, except 6-1/4" long	P71-361
25	SHAFT, only	P71-520
26	NUT, for shaft	P71-332
27	COLLAR, for shaft	P71-127
28	CAM, as shown	P71-416
28A	CAM, as shown	P71-414
28B	CAM, as shown	P71-418
28C	CAM, as shown	P71-415
28D	CAM, as shown	P71-409
28E	CAM, as shown	P71-417
28F	CAM, as shown	P71-411
28G	CAM, as shown	P71-413
28H	CAM, as shown	P71-412
28K	CAM, as shown	P71-419
28L	CAM, as shown	P71-410
29	COLLAR, for shaft	P71-190
30	WASHER, spacer	P71-144
31	COLLAR, for shaft	P71-395
32	BUSHING, for shaft	P71-192
33	PIN, taper, for pinion	P71-150
34	PINION, 13 teeth, for shaft	P71-319
35	PIN, 1/16" x 9/16", for fastening cams to hubs	P71-177
36	PIN, 1/4" x 2", for fastening collar to shaft	P73-113
37	ROLLER, steel, for finger Ref. D	P71-321
38	SCREW, for roller	P71-313
38A	NUT, for above	P71-354

Master Circuit Controllers

Parts List

Order by catalog number and name shown in bold type

REF.	NAME	CATALOG NUMBER
38B	SPACER, brass, for roller Ref. 37	P71-392
38C	SPACER, steel, for roller Ref. 39	P71-393
39	ROLLER, insulating, for finger Ref. E.	P71-322

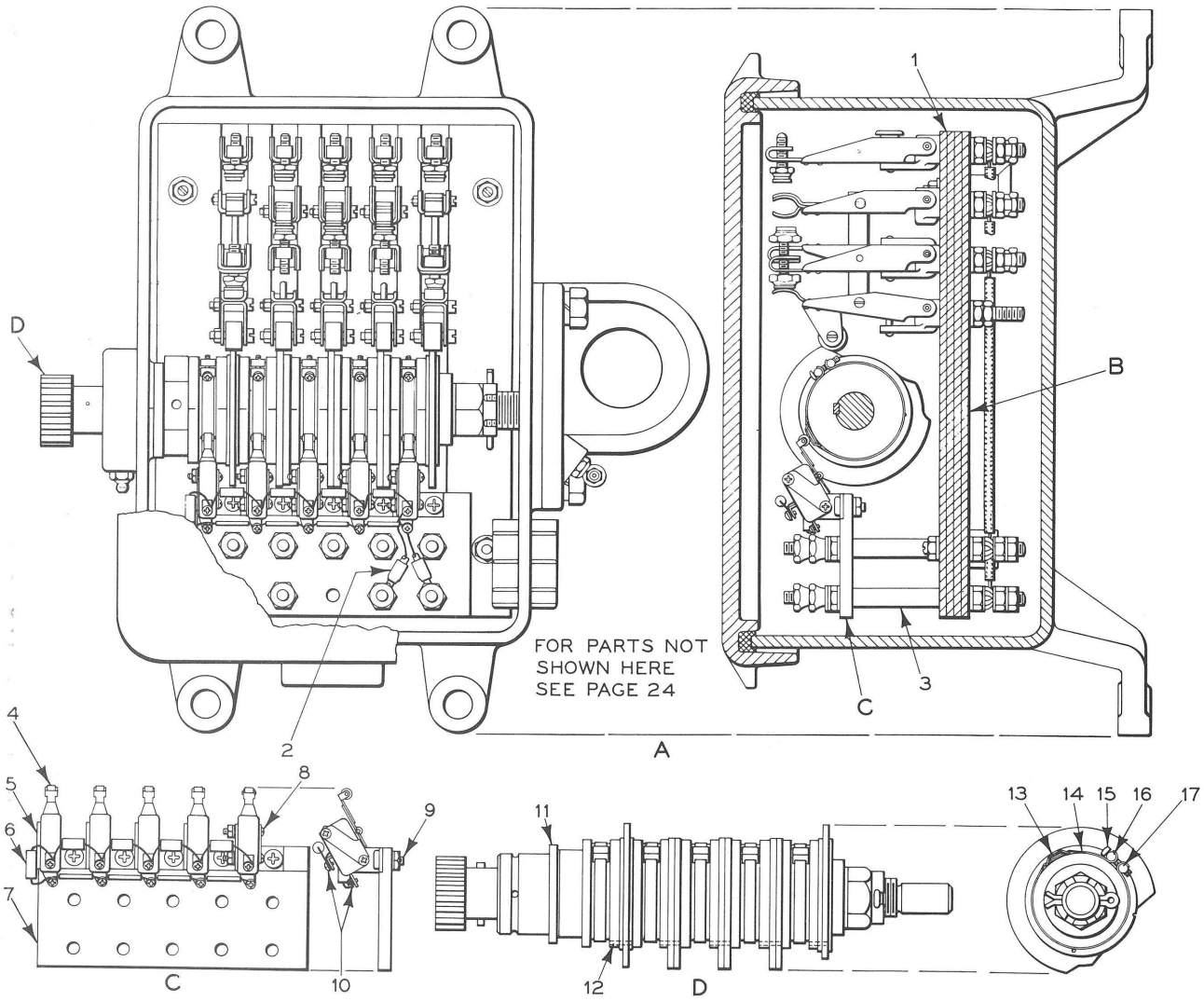

Master circuit controllers.

Master Circuit Controller

Parts List

Order by catalog number and name shown in bold type

REF.	NAME	CATALOG NUMBER
A	CONTROLLER COMPLETE, for Type E160 retarders. Has cams for indicating all positions of retarder, for mechanism shown on page 12, Ref. A5	P71-468
B	BOARD COMPLETE, terminal.	P71-427
C	BOARD COMPLETE, with five micro-switches	P71-317
D	SHAFT COMPLETE, for controller	P71-507
1	BOARD, only, for board Ref. B	P71-339
2	CONNECTOR, for micro-switch in space 0	P71-363
3	BUSHING, for board Ref. C	P71-331
4	SWITCH, micro.	P71-335
5	BRACKET, for micro-switches	P71-384
6	RESISTOR, 2W, 200 ohms	P71-636
7	BOARD, only	P71-340
8	SCREW, for mounting micro-switches.	P71-113
8A	WASHER, lock, for above	P71-109
9	SCREW, for fastening brackets to board.	P71-115
9A	NUT, for above	P76-129
9B	WASHER, lock, for above	P62-401
10	SCREW, for micro-switches	P62-444
11	COLLAR, for shaft	P71-191
12	PIN, roll, 1/16" x 3/8", for fastening cams to hubs	P71-230
13	CAM, for micro-switches	P71-420
14	CLAMP, for cams	P71-123
15	SCREW, for clamps	P71-241
16	NUT, with 1/8" drilled hole	P71-209
17	NUT, No. 4-40	P71-210

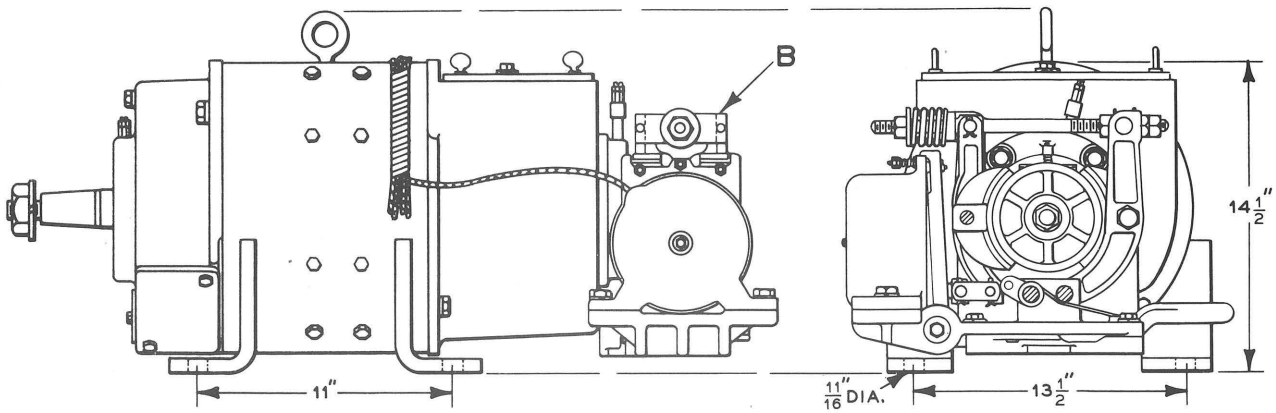

A

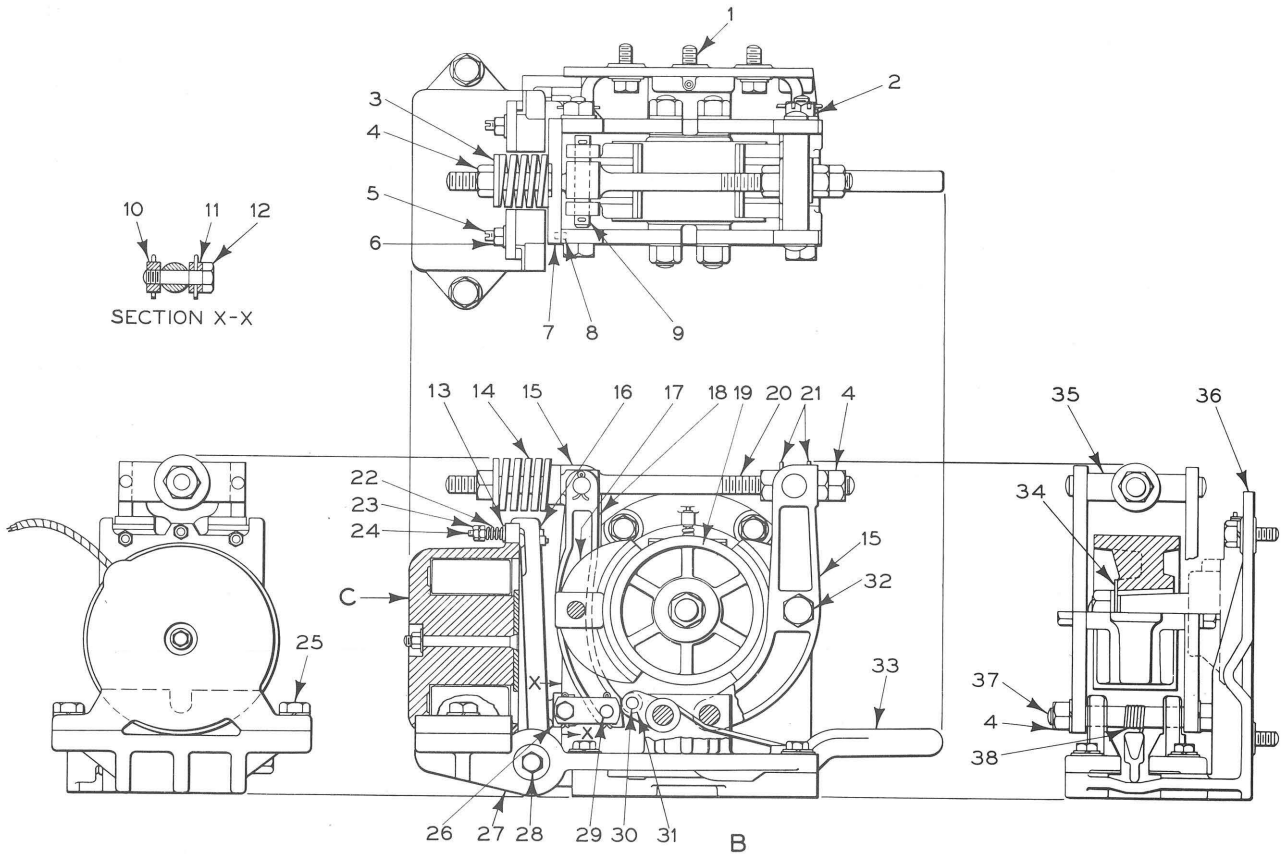

Motors and brakes for mechanisms.

Motors and Brakes for Mechanisms

Parts List

Order by catalog number and name shown in bold type

REF.	NAME	CATALOG NUMBER
A	MOTOR COMPLETE, 230 volt d-c, series type, with shoe-type brake with sintered linings	P71-451
A1	As above, except shunt type	P71-452
A2	MOTOR ONLY, for Refs A and A1	P71-450
	HOLDER COMPLETE, brush	P71-645
	BRUSH, only	P71-646
	BEARING, ball, for each end	P71-647
	COIL, commutating, interpole	P71-648
	COIL, field	P71-644
	ARMATURE COMPLETE	P71-643
B	BRAKE COMPLETE, series-type, has sintered linings	P71-618
B1	As above, except shunt-type, has sintered linings	P71-619
C	CASE COMPLETE, for series-type brake Ref. B, includes encapsulated coils	P71-227
C1	As above, except for shunt-type brake Ref. B1	P71-228
1	SCREW, for fastening brake to motor	P71-173
1A	WASHER, lock, for above	P50-101
2	NUT, for screw Ref. 32	P81-199
3	WASHER, for spring Ref. 14	P71-138
4	NUT, for spring also for pin Ref. 37	P71-149
5	STUD, for adjusting lever movement	P71-164
6	NUT, for stud Ref. 5	P81-127
6A	WASHER, lock, for above	P81-122
7	STRAP, for spring Ref. 14	P71-628
8	STUD, for locking strap to levers	P71-131
9	PIN, bearing for brake rod	P71-134
10	LINK, for lever Ref. 18	P71-348
11	LINK, for lever Ref. 18	P71-347
12	SCREW, for links Refs. 10 and 11	P71-548
13	WASHER, for spring Ref. 22	P50-157
14	SPRING, for brake	P71-162
15	LEVER, for supporting brake shoe	P71-625
16	ARMATURE, for brake	P71-621
17	BRAKE SHOE COMPLETE, with sintered lining, two required	P71-284
18	LEVER, for operating brake shoe	P71-624
19	WHEEL, brake	P71-623
20	ROD, for brake adjustment	P71-627
21	WASHER, for nut Ref. 4	P26-106

Motors and Brakes for Mechanisms

Parts List

Order by catalog number and name shown in bold type

REF.	NAME	CATALOG NUMBER
22	SPRING, for bolt Ref. 24	P71-286
23	NUT, for bolt Ref. 24	P85-11
24	BOLT, for armature	P71-128
25	SCREW, for fastening case to frame	P87-108
25A	WASHER, lock, for above	P85-109
26	STUD, for armature	P71-165
27	PLATE, base, for brake	P71-626
28	SCREW, for fastening brake to motor	P71-630
29	PIN, for fastening links to lever Ref. 18	P71-135
30	PIN, for roller Ref. 31	P71-133
31	ROLLER, for hand release lever	P71-365
32	SCREW, for levers Refs. 15 and 18	P71-174
33	LEVER, for hand release	P71-622
34	WASHER, for end of motor shaft	P3-102
35	TRUNNION, for brake shoe levers	P71-629
36	FRAME, adapter, for fastening brake to motor	P71-620
37	PIN, bearing for brake shoe levers	P71-137
38	SPRING, for hand release lever	P71-169

Memoranda

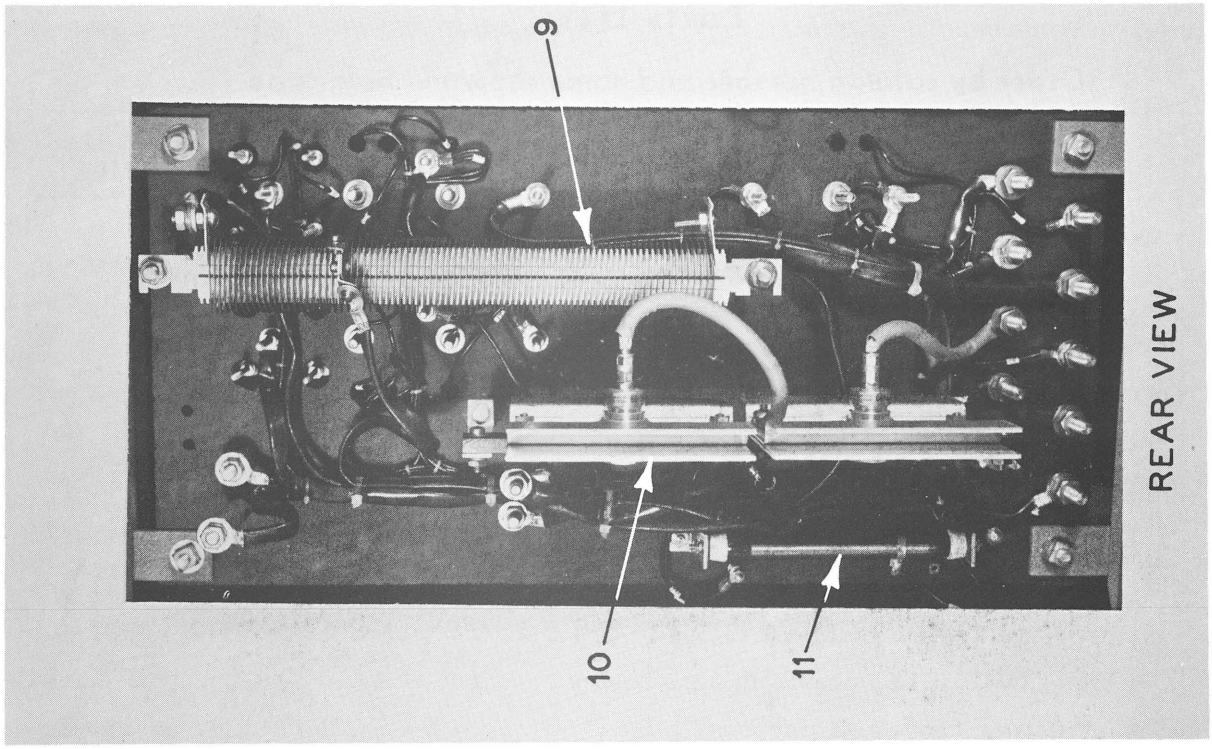

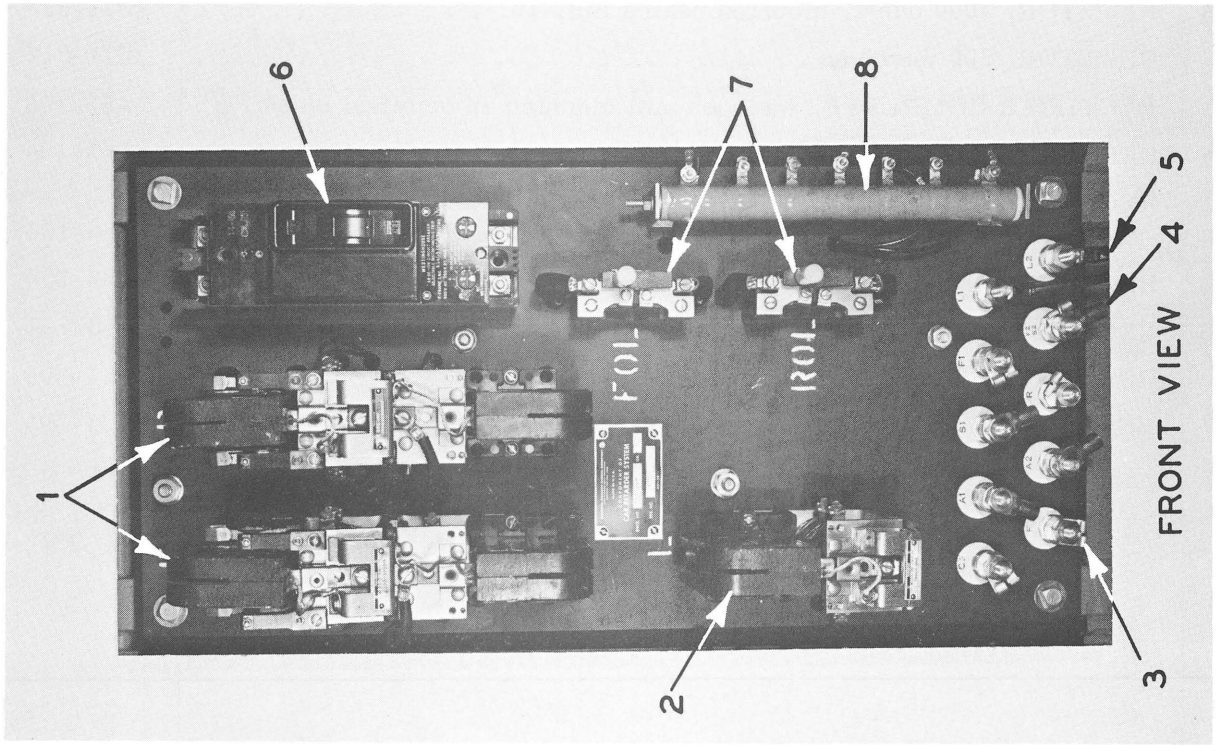

A - Controller for mechanisms.

Controller for Mechanisms

Parts List

Order by catalog number and name shown in bold type

REF.	NAME	CATALOG NUMBER
A	CONTROLLER COMPLETE, for 132.5 volt, 3 wire control, for controlling car retarder motor with shunt-type brake	P71-546
1	CONTACTOR COMPLETE, forward and reverse, for references see page 41	
2	CONTACTOR COMPLETE, line, for references see page 39	
3	TIMETACTOR COMPLETE, for references see page 43	
4	TERMINAL, for 3/8" post and No. 14 wire	P71-170
5	TERMINAL, for 3/8" post and No. 2 wire	P71-220
6	TERMINAL, for 3/8" post and No. 6 wire	P71-221
7	CIRCUIT BREAKER COMPLETE	P71-405
8	RELAY COMPLETE, overload, less heater	P71-604
8A	HEATER, for above, 32 amperes	P71-615
9	RESISTOR, 400 ohms	P71-597
10	RESISTOR, 1300 ohms, mounted in front.	P71-598
10A	RESISTOR, 3000 ohms, mounted behind Ref. 10.	P71-599
11	RESISTOR, 800 vitrohms	P71-342
12	RECTIFIER COMPLETE, includes unit mounted on terminal block.	A53-103
12A	RECTIFIER UNIT, only, for above.	P53-105
13	RECTIFIER COMPLETE, 600 volts, includes six units, brackets, cables and all mounting hardware	A53-104
13A	RECTIFIER, only, with heat sink, for above.	P53-106
13B	RECTIFIER, only, for above	P53-107
14	RESISTOR, 1700 ohms, field discharge	P71-600
15	RESISTOR, 1.95 ohms	P71-595

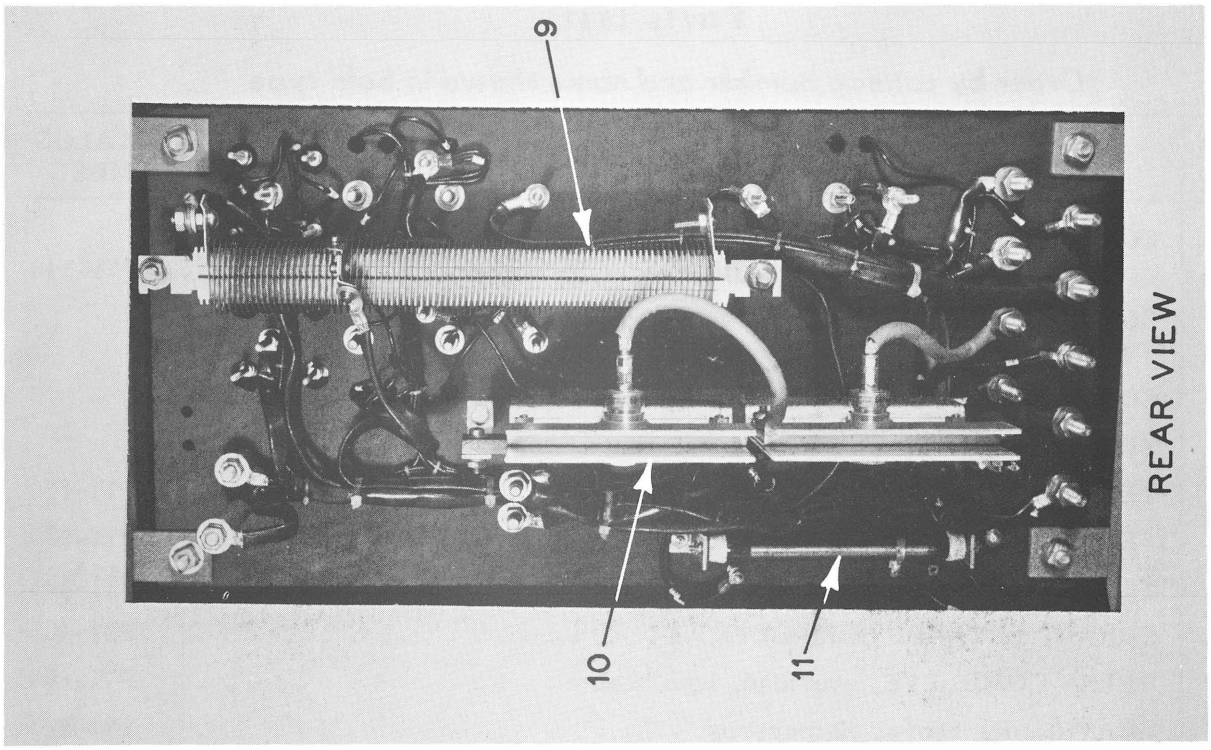

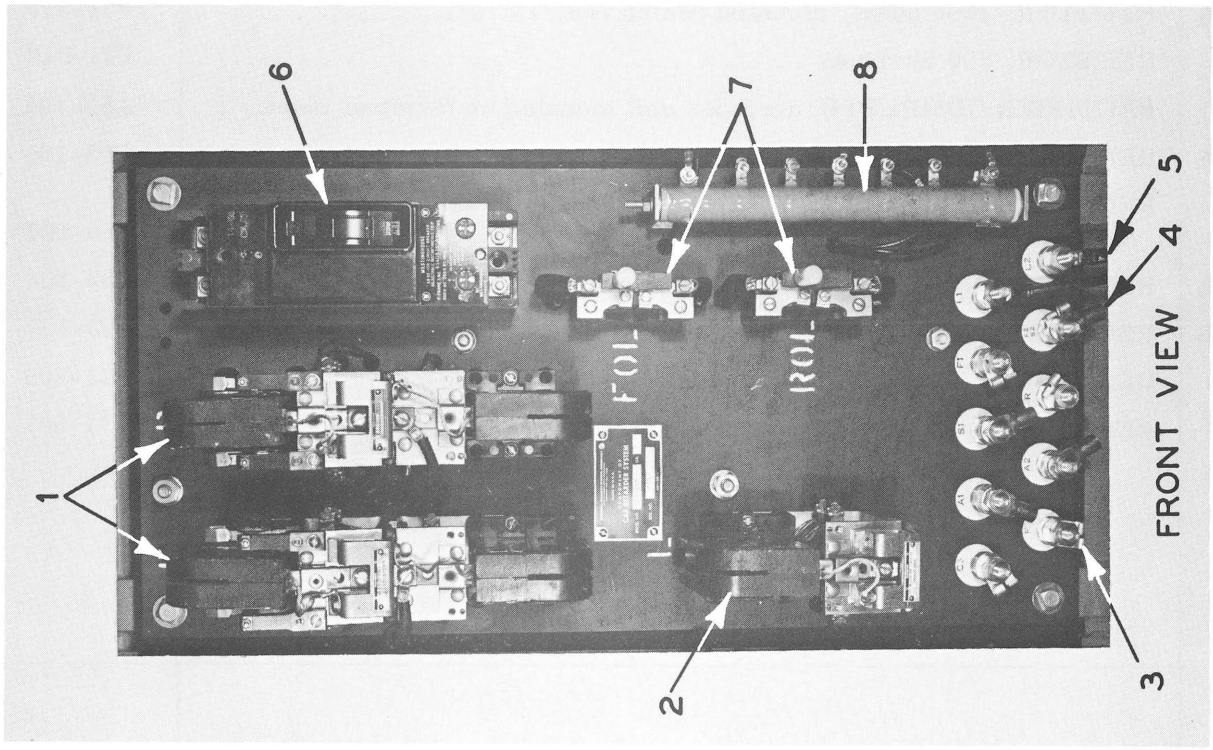

A - Controller for mechanisms.

Controller for Mechanisms

Parts List

Order by catalog number and name shown in bold type

REF.	NAME	CATALOG NUMBER
A	CONTROLLER COMPLETE, for 132.5 volt, 3 wire control, for controlling car retarder motor with series-type brake	P71-547
1	CONTACTOR COMPLETE, forward and reverse for references see page 41	
2	CONTACTOR COMPLETE, line, for references see page 39	
3	TERMINAL, for 3/8" post and No. 14 wire	P71-170
4	TERMINAL, for 3/8" post and No. 2 wire	P71-220
5	TERMINAL, for 3/8" post and No. 6 wire	P71-221
6	CIRCUIT BREAKER COMPLETE.	P71-405
7	RELAY COMPLETE, overload, less heater.	P71-604
7A	HEATER, for above, 32 amperes	P71-615
8	RESISTOR, 3000 ohms	P71-599
9	RESISTOR, 1.95 ohms	P71-595
10	RECTIFIER COMPLETE, 600 volts, includes two units, brackets, cables and all mounting hardware	A53-102
10A	RECTIFIER, only, with heat sink, for above	P53-106
10B	RECTIFIER, only, for above.	P53-107
11	RESISTOR, 1700 ohms, field discharge	P71-600

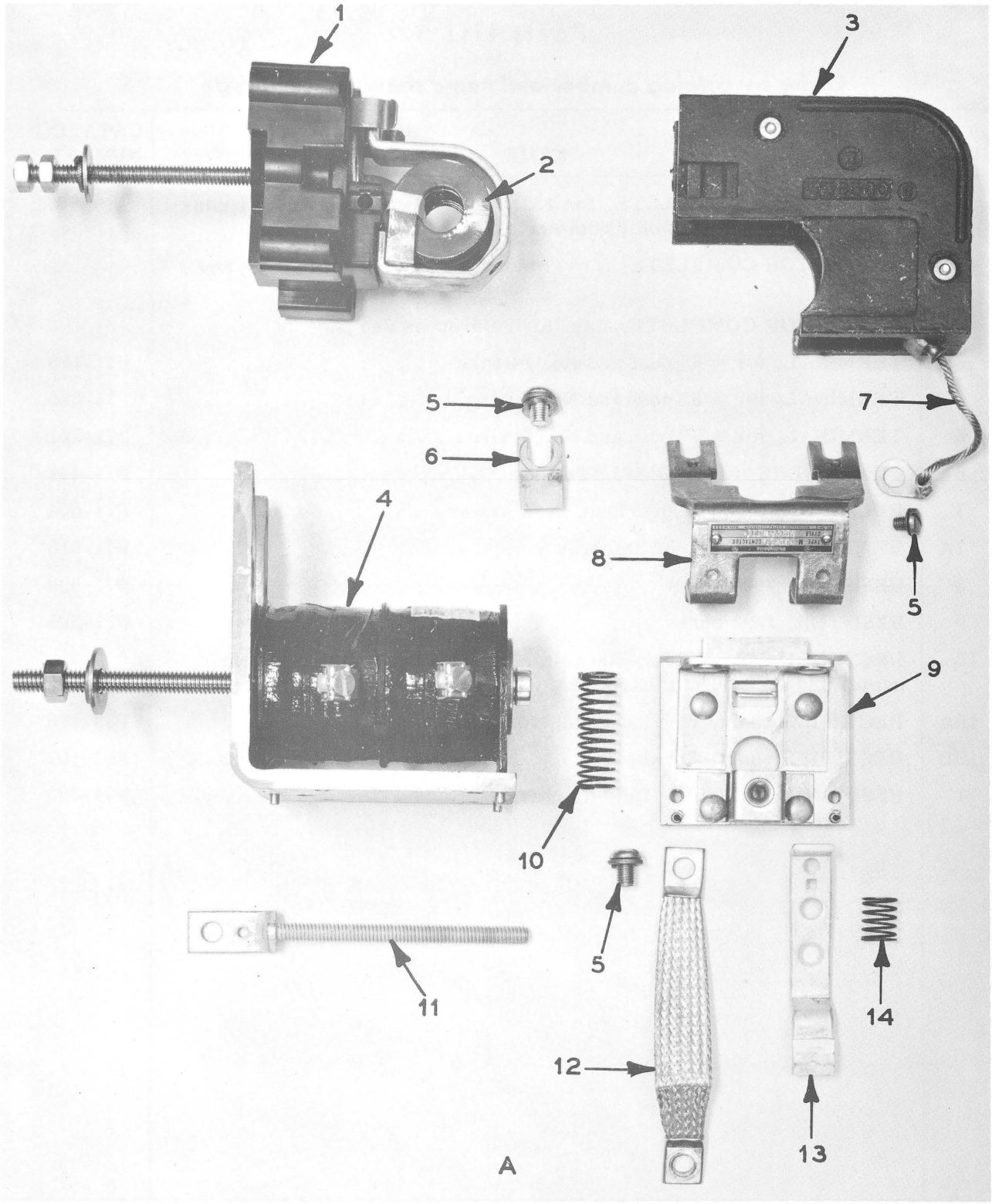

Line contactor for controller.

Line Contactor for Controller

Parts List

Order by catalog number and name shown in bold type

REF.	NAME	CATALOG NUMBER
A	LINE CONTACTOR COMPLETE, 600 volts, 25 amperes	P71-601
1	STATIONARY CONTACT BASE, 25 amperes	P71-278
2	BLOWOUT COIL ASSEMBLY, 25 amperes	P71-277
3	ARC BOX COMPLETE, with shunt	P71-251
4	OPERATING COIL	P71-253
5	SCREW, for stationary contact, shunt strap and arc horn shunt	P71-247
6	STATIONARY CONTACT	P71-249
7	ARC HORN, with shunt	P71-252
8	ARMATURE STOP	P71-280
9	BARE ARMATURE	P71-282
10	KICKOUT SPRING	P71-250
11	CONNECTING STUD, with clip	P71-281
12	SHUNT, STRAP	P71-248
13	CONTACT FINGER, moving front	P71-243
14	CONTACT SPRING	P71-244

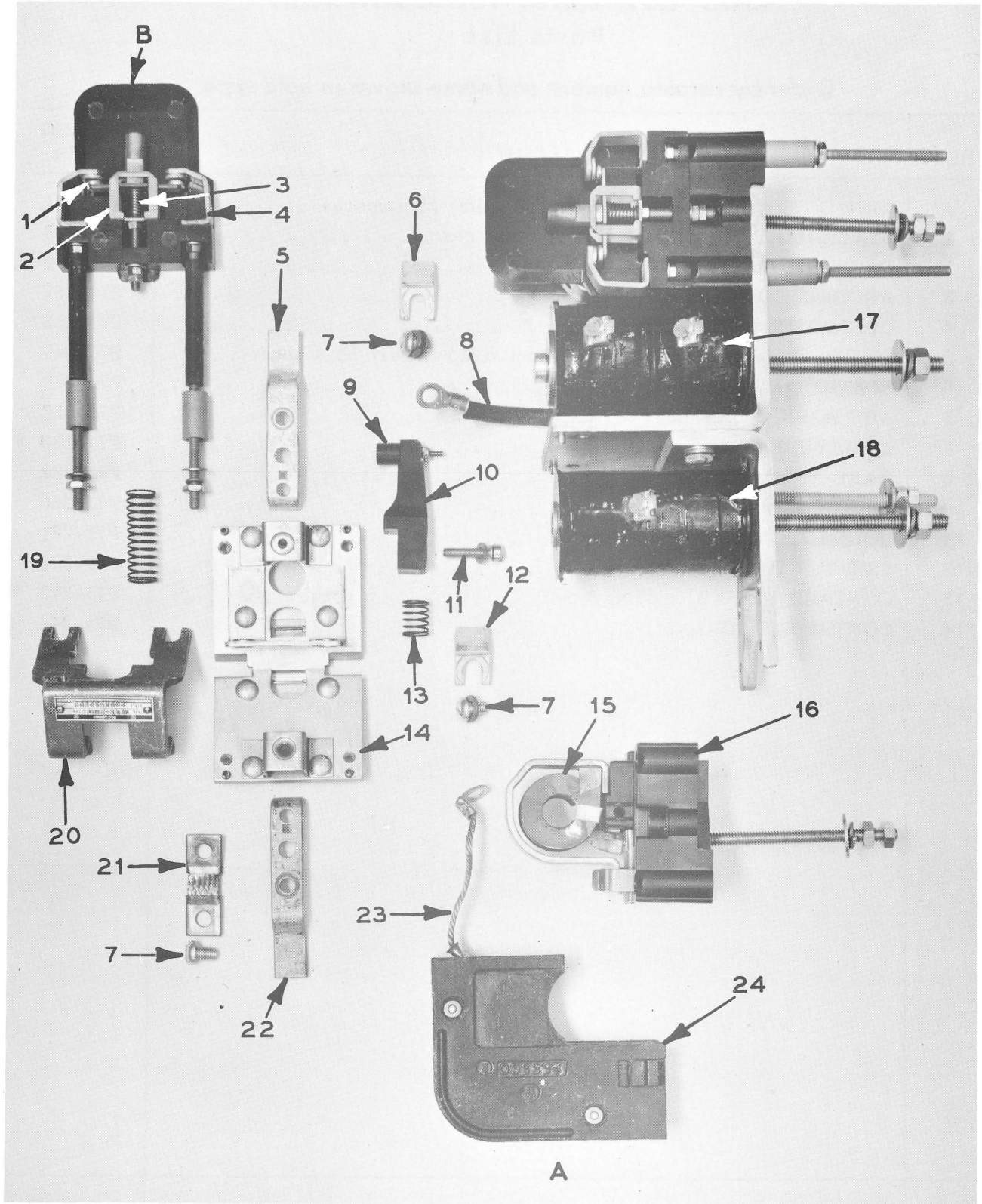

Forward and Reverse contactor for controller.

Forward and Reverse Contactor for Controller

Parts List

Order by catalog number and name shown in bold type

REF.	NAME	CATALOG NUMBER
A	FORWARD and REVERSE CONTACTOR COMPLETE, with interlock contacts	P71-596
B	INTERLOCK COMPLETE	P71-268
1	CONTACT, interlock, moving	P71-264
2	CONTACT SUPPORT, interlock, moving	P71-265
3	CONTACT SPRING, interlock, moving	P71-263
4	CONTACT INTERLOCK, stationary	P71-262
5	CONTACT FINGER, moving front	P71-243
6	CONTACT, stationary, front	P71-249
7	SCREW, for stationary contacts, shunt strap and arc horn shunt	P71-247
8	SHUNT LEAD, lower	P71-246
9	CONTACT BUTTON, interlock	P71-266
10	CONTACT ARM, interlock	P71-267
11	SCREW, for arm	P71-258
12	CONTACT, stationary, back	P71-255
13	CONTACT SPRING	P71-244
14	BARE ARMATURE	P71-279
15	BLOWOUT COIL COMPLETE, 25 amperes	P71-277
16	STATIONARY CONTACT BASE, 25 amperes	P71-278
17	OPERATING COIL, upper	P71-253
18	OPERATING COIL, lower	P71-254
19	KICKOUT SPRING	P71-250
20	ARMATURE STOP	P71-280
21	SHUNT, upper strap	P71-245
22	CONTACT FINGER, moving back	P71-256
23	ARC HORN, with shunt	P71-252
24	ARC BOX COMPLETE, with shunt	P71-251

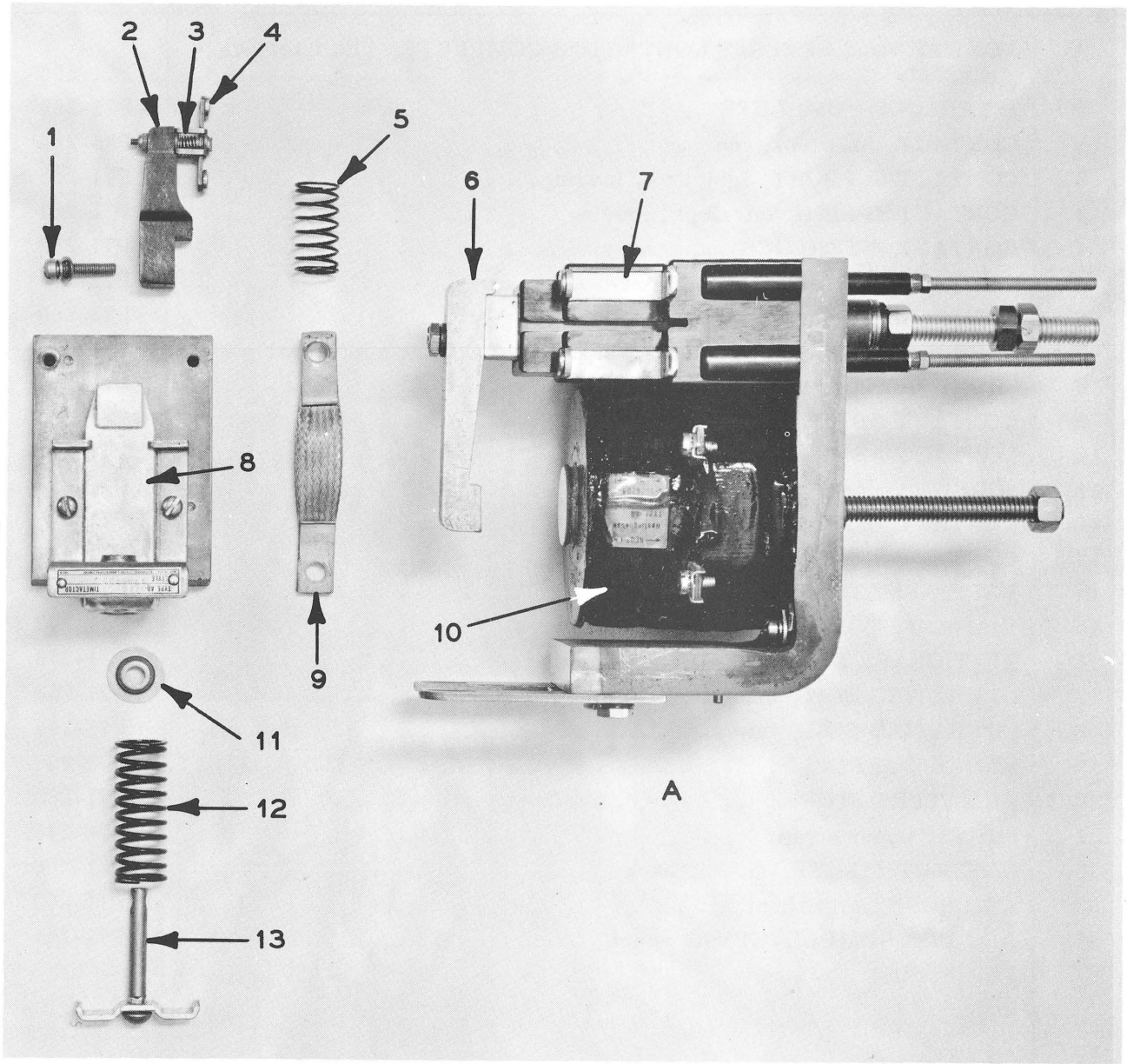

Timetactor for controller.

Timetactor for Controller

Parts List

Order by catalog number and name shown in bold type

REF.	NAME	CATALOG NUMBER
A	TIMETACTOR COMPLETE	P71-612
1	SCREW, for arm	P71-258
2	ARM, only, auxiliary contact	P71-257
3	CONTACT SPRING	P71-270
4	CONTACT, moving, auxiliary contact	P71-269
5	CONTACT SPRING, armature	P71-272
6	CONTACT, stationary main	P71-276
7	CONTACT, auxiliary, stationary make	P71-261
8	CONTACT, moving	P71-275
9	SHUNT, strap	P71-271
10	OPERATING COIL	P71-260
11	WASHER, spring cup	P71-274
12	KICKOUT SPRING	P71-259
13	PIN, spring, with clip	P71-273

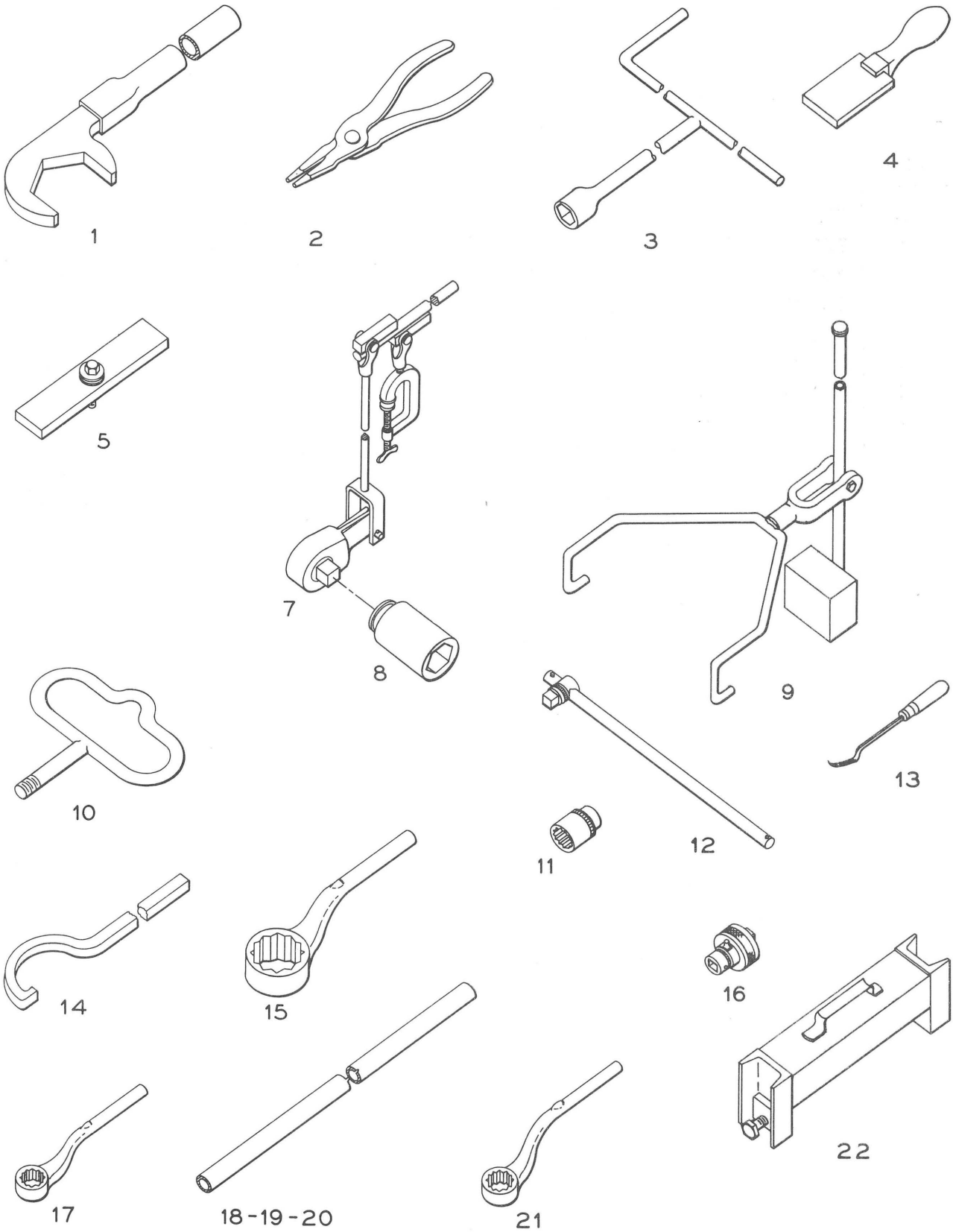

Tools for car retarders.

Tools for Car Retarders
Parts List

Order by catalog number and name shown in bold type

REF.	NAME	CATALOG NUMBER
1	WRENCH, 2' -10-1/2" long, for 3" hex. nuts (4-5/8" across flats) . .	P71-207
*2	PLIERS, for applying retaining rings to crank pins	P71-372
3	WRENCH, for 1" hex. hd. screws, (1-17/32" across flats).	P71-208
*4	STONE, for dressing motor commutator.	P71-305
5	PLATE COMPLETE, for lifting pin Ref. 27, page 16 from mechanism.	P71-226
7	WRENCH COMPLETE, ratchet, for spring rod nuts, includes socket Ref. 8	P71-201
8	SOCKET, for 2-3/8" hex. spring rod nuts, for use with wrench Ref. 7.	P71-199
9	INSTALLER, for springs Refs. 6 & 7, page 2	P71-176
10	BAIL, for removing crank pin.	P71-633
*11	SOCKET, for 1-5/8" hex. nuts	P71-200
*12	HANDLE, 19-5/8" long, with 3/4" sq. drive, for socket Ref. 11 and adapter Ref. 16	P71-283
*13	FILE, for undercutting slots in motor commutator.	P71-307
14	WRENCH, spanner, 27-3/4" long, for cap Ref. 31, page 16.	P71-312
*15	WRENCH, 2-3/4" offset, for 2" hex. nuts, (3-1/8" across flats), requires handle Ref. 18, giving a total length of 42".	P71-605
*16	ADAPTER, ratchet, for handle Ref. 12 and socket Ref. 11	P71-225
*17	WRENCH, 1-5/16" offset, for 1" nuts (1-1/2" across flats), requires handle Ref. 20 giving a total length of 29-1/2"	P71-606
*18	HANDLE, only, 36" long, for wrench Ref. 15	P71-607
*19	HANDLE, only, 30" long, for wrench Ref. 21	P71-549
*20	HANDLE, only, 24" long for wrench Ref. 17	P71-608
22	INSTALLER, for shims, Ref. 74, page 2	P71-304

* = Commercial Items

Memoranda

CATALOG SECTION 73

Color-Light Signals
Type D

CONTENTS

	Page
Signal Heads	7
Mast Assemblies	10 to 12
Ladder Foundations	12
Lens Units	13
Anti-Phan	13
Wire Entrance Material	14
General Information	2
How To Order	3

Parts lists are available on request

GENERAL RAILWAY SIGNAL COMPANY

ROCHESTER, NEW YORK

Printed in U. S. A.

August 1960

Type D Color-Light Signals

GENERAL INFORMATION

To give you the simplest possible ordering procedure consistent with a wide choice of color-light signal arrangements, Type D signals are cataloged as two major assemblies (1) signal heads for tangent or for curved track, complete with your choice of lamp bulb, and (2) mast assemblies, complete with base, ladder, and platform assembly as required. Anti-Phans, optional equipment, are listed for separate ordering.

Information for ordering complete lens units separately is given on page 13.

The Type D signal is a long-range, color-light signal, which gives various signal indications by the display of one or more colored lights. Each unit has a doublet-lens combination, which produces an aspect of one color. Each unit is contained in its own case and has no moving parts. To obtain aspects of more than one color, the required number of units are bolted together, one above the other.

The abutting surfaces of each unit are machined to ensure accurate alignment of multiple-unit assemblies. The unit construction of the Type D signal makes it simple to add or change aspects after installation and reduces spare parts requirements. Individual Type D signal units may be used as marker lights, take-siding indicators, etc.

LENSES

Signal units are furnished with optical arrangements as in Fig. A for tangent track or as in Fig. B, for curved track.

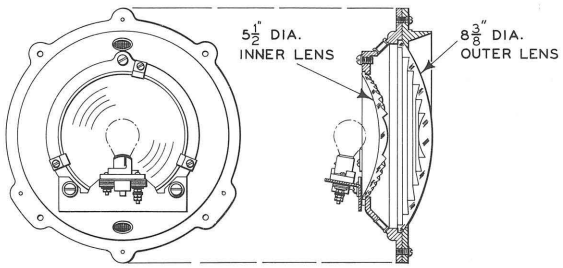

FIG. A–FOR TANGENT TRACK

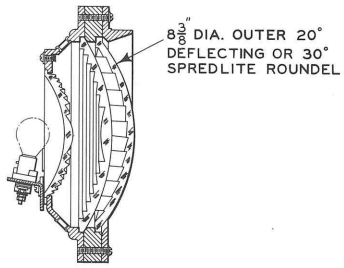

FIG. B–FOR CURVED TRACK

The outer lens is an 8-3/8-inch doublet, with a 4-inch focus and a 40-degree (from the horizontal) deflecting bullseye, more commonly called a "hotspot" lens.

This lens deflects part of the main beam to one side, through an angle of 40-degrees, for close-up indication.

Signals are furnished with 5 1/2-inch beam-coloring inner lenses positioned as follows:

THREE-ASPECT COMBINATION OF UNITS		TWO-ASPECT COMBINATION OF UNITS		ONE-ASPECT UNIT
Upper lens	Green	Upper lens	Yellow	Red
Center lens	Yellow	Lower lens	Red	
Lower lens	Red			

The doublet lens combination may be replaced as a unit, or either lens may be replaced separately. However, as these lens combinations are factory focused, care must be taken in reassembling, as the efficiency of the signal may be impaired if assembled improperly. If the outer lens is replaced, sealing compound must be applied to the rim of the lens bezel ring before reassembly. For this we recommend Vulcatex, gun grade for metal-to-metal surfaces and knife grade for roundels.

LAMPS

GRS precision filament lamps must be used to get the best aspect. Lamp assemblies are factory focused. If GRS precision filament lamps are used for replacements, lamps may be replaced in the field without refocusing. The Type D signal is furnished with a single-contact, candelabra, 2-pin, bayonet base lamp for each unit. See GRS Assemblies Catalog, Section 46, and specify lamps desired.

When ordering replacement lamps for earlier model Type D signals, check to see which type lamp your signal is equipped to receive. If you need rebased, single-contact, 3-pin, medium bayonet base lamps, see GRS Assemblies Catalog, Section 46.

LAMP RESISTORS

The signal heads listed as being furnished with lamp resistor have a two-ohm adjustable resistor, maximum current 1.75 amperes, in the common return of each one-aspect signal head and - in the bottom unit only - of each two- and three-aspect signal head.

ALIGNMENT

Signals can be mounted in two ways: (1) top-of-mast, and (2) on the side or on the front of mast using offset bracket shown on page 6. Mountings are adjustable as shown on page 6. A peep sight is built into the signal case for aiming the signal beam.

HOW TO ORDER

To order a complete signal, select signal head assemblies from page 7, and select mast assembly from page 12.

To order lens units, separately, see page 13.

If it is desired to use a transformer, there is space in each signal unit for mounting a GRS Type K 1/2 transformer.

Order following items separately, as needed.

1 - Wire entrance material, page 14.

2 - Bracket Ref. D, page 6, for mounting signal heads on front or side of mast.

3 - Anti-Phan, page 13.

4 - Transformers, Catalog Section 95.

5 - Instrument cases, Catalog Section 5.

6 - Foundation bolts, Catalog Section 3.

Memoranda

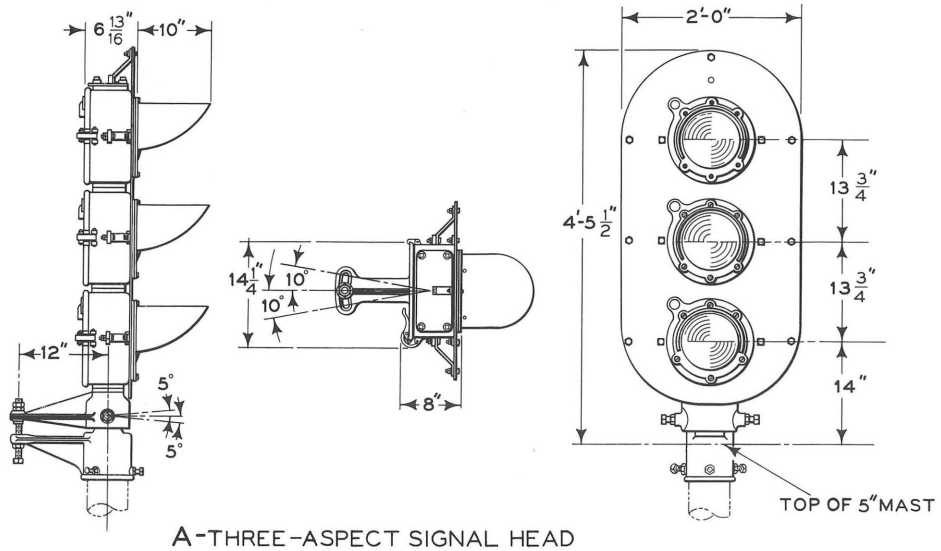

A-THREE-ASPECT SIGNAL HEAD

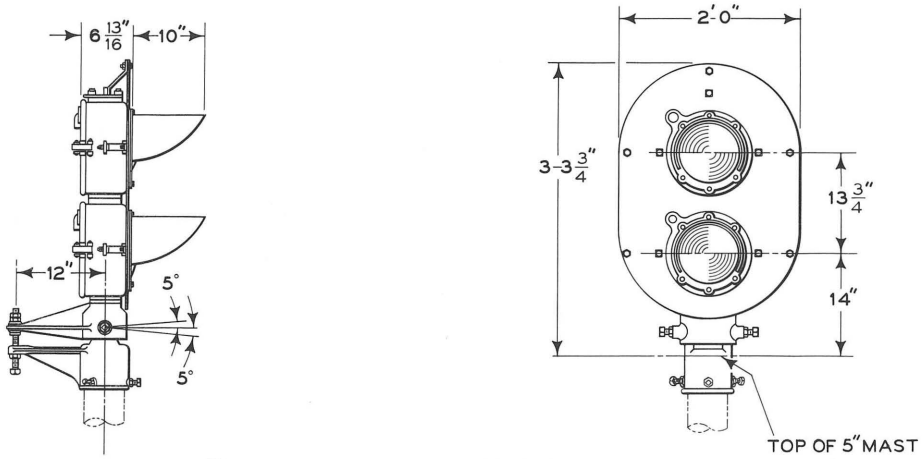

B-TWO-ASPECT SIGNAL HEAD

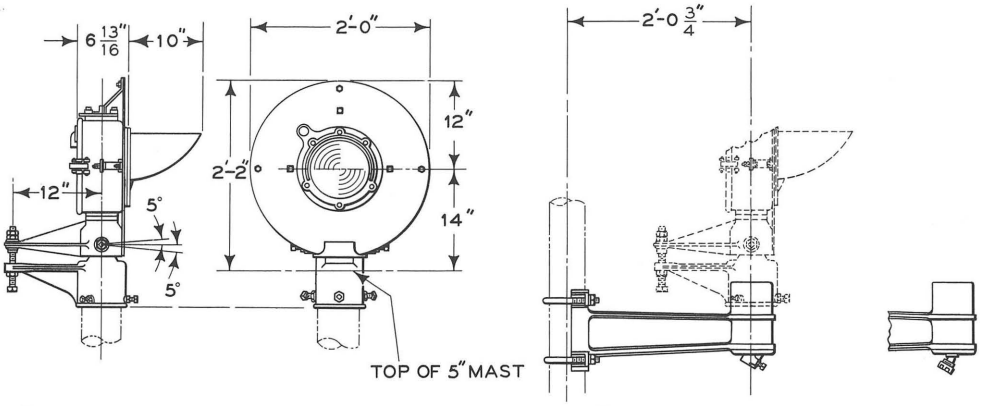

C-ONE-ASPECT SIGNAL HEAD

D-BRACKET
FRONT-OR SIDE-OF-MAST MOUNTING

D1-BRACKET

Type D signal heads.

TYPE D SIGNAL HEADS COMPLETE

To order, specify "Type D Signal" and give catalog number. Each signal head includes ventilators and lamp bulbs. Specify type of lamp bulbs desired by catalog number (see Catalog Section 46). Mounting brackets are adjustable. They fit on the top of a five-inch mast and also fit on bracket Ref. D. If signal head is to be mounted on front or side of mast, be sure to order bracket Ref. D, which is available with a choice of wire entrance couplings.

The signal heads listed as being furnished with lamp resistor have a two-ohm adjustable resistor, maximum current 1.75 amperes, in the common return of each one-aspect signal head and in the bottom unit only - of each two - and three-aspect signal head.

The following items are not included with Type D signal heads. Order separately from pages indicated:

1. Mast assemblies, pages 10 to 12.
2. Wire entrance material, page 14 (bracket Ref. D includes choice of couplings - top-of-mast mounted signal head needs no wire entrance material).
3. Anti-Phan, if needed, page 13.

THREE-ASPECT SIGNAL HEAD

REF.	ASPECTS	FOR TANGENT OR CURVED TRACK	CATALOG NUMBER	
			WITHOUT RESISTOR	WITH RESISTOR
A	Green/Yellow/Red	Tangent	A73-101	A73-111
A1	"	Curved with 20° deflection to left *	A73-103	A73-113
A2	"	" " " " " right*	A73-105	A73-115
A3	"	" " 30° Spredlite	A73-107	A73-117

TWO-ASPECT SIGNAL HEAD

B	Yellow/Red	Tangent	A73-121	A73-131
B1	"	Curved with 20° deflection to left *	A73-123	A73-133
B2	"	" " " " " right*	A73-125	A73-135
B3	"	" " 30° Spredlite	A73-127	A73-137

ONE-ASPECT SIGNAL HEAD

C	Red	Tangent	A73-141	A73-151
C1	"	Curved with 20° deflection to left *	A73-143	A73-153
C2	"	" " " " " right*	A73-145	A73-155
C3	"	" " 30° Spredlite	A73-147	A73-157

* When looking thru peep sight.

TYPE D SIGNAL HEADS COMPLETE

Order by catalog number and name shown in bold type

REF.	NAME	CATALOG NUMBER
D	BRACKET COMPLETE, for use when signal units are mounted in front or side of mast. Includes 60 degree coupling for 1 1/2" flexible conduit, also includes U bolts, nuts and washers for attaching to five-inch mast	A73-161
D1	as above, except with 45 degree coupling, for 3/4" to 7/8" dia. cable	A73-165
D2	same as Ref. D1, except for 7/8" to 1.0" dia. cable	A73-167
D3	same as Ref. D1, except for 1.0" to 1 3/16" dia. cable	A73-169

Memoranda

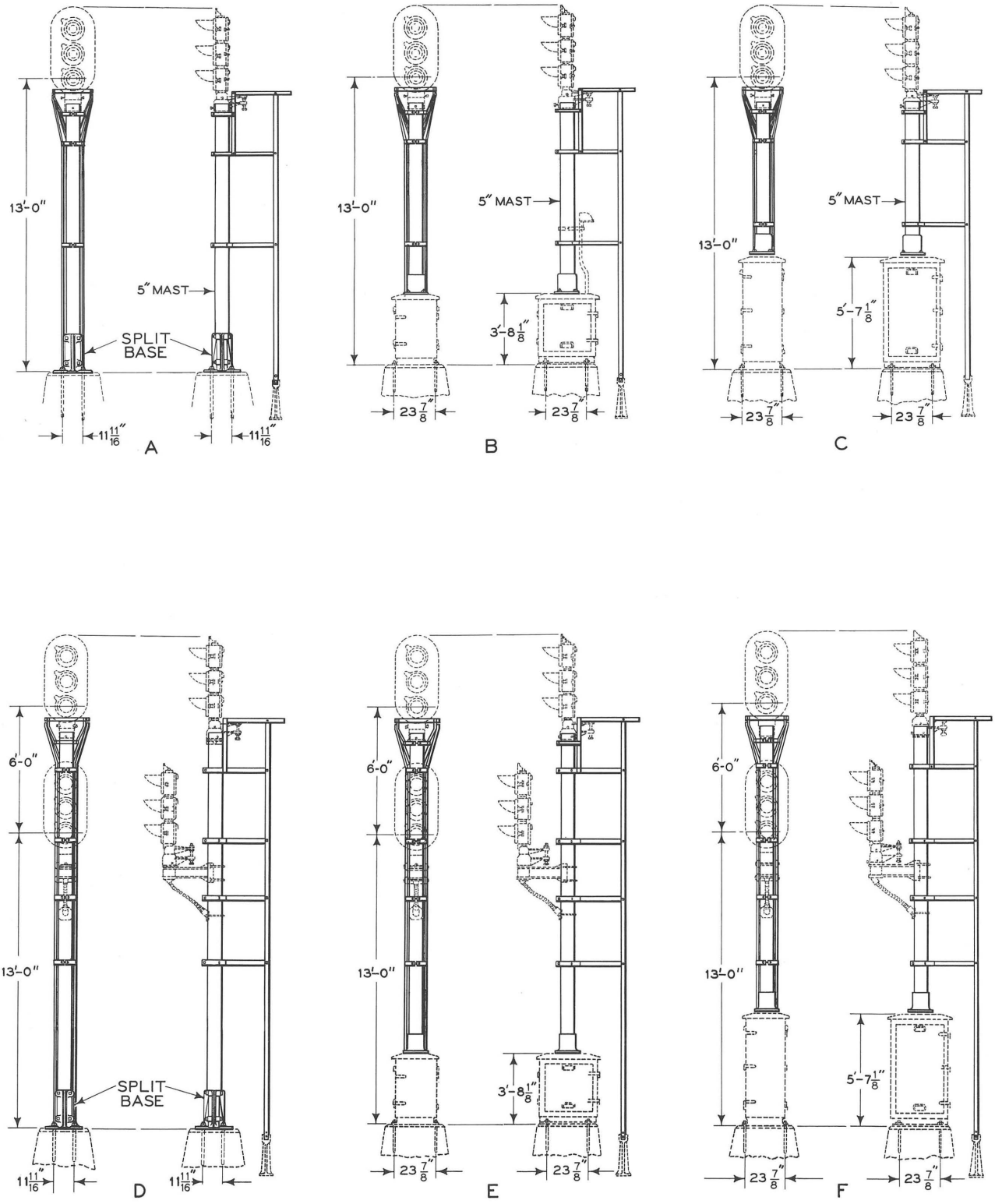

Mast assemblies.

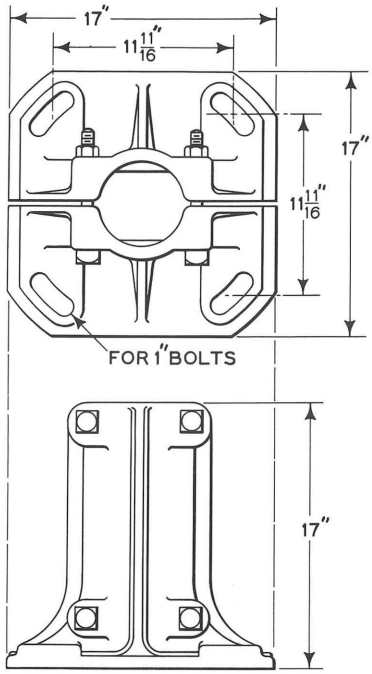

SPLIT BASE

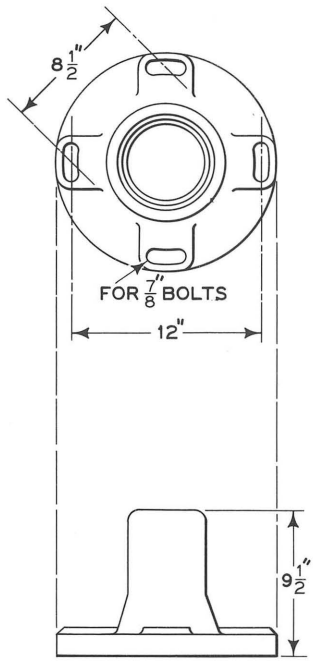

SOLID BASE
FOR CASE MOUNTING

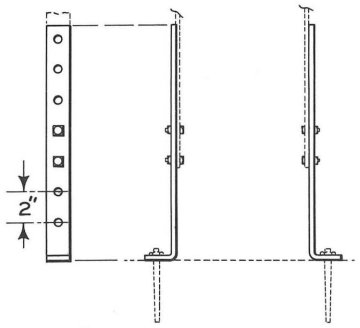

G-LADDER SUPPORTS

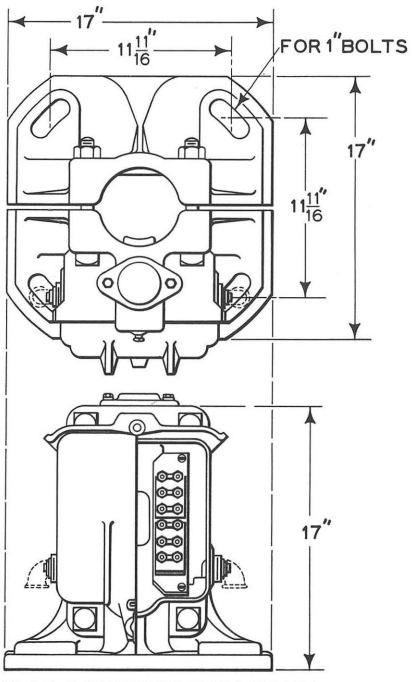

SPLIT JUNCTION BOX BASE

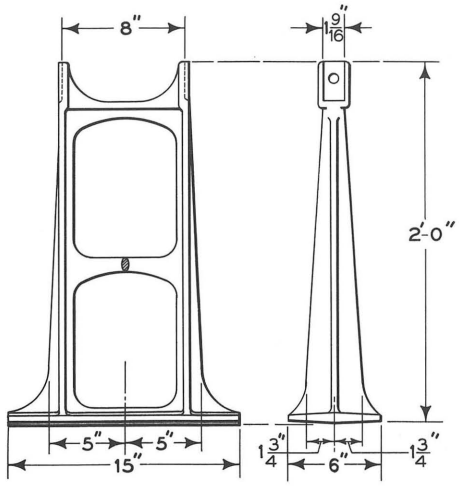

H-LADDER FOUNDATION

Types of bases supplied with signal mast assemblies.

MAST ASSEMBLIES

Masts listed below and shown on pages 10 and 11 are five-inch inside diameter. They are drilled for the signal arrangements shown and come complete with base, ladder, and platform assembly. (For actual drilling, see page 14.) For foundation bolts, see Catalog Section 3.

To order, specify "Mast Assembly" and give catalog number

REF.	DRILLED FOR SIGNAL HEADS	TYPE OF BASE (See Page 11)	CATALOG NUMBER
A	None	Split	A73-181
A1	"	Split Junction Box	A73-183
* B	"	Solid	A73-185
* C	"	"	A73-187
D	One	Split	A73-189
D1	"	Split Junction Box	A73-191
* E	"	Solid	A73-193
* F	"	"	A73-195

LADDER FOUNDATIONS

Order by catalog number and name shown in bold type

REF.	NAME	CATALOG NUMBER
G	SUPPORT, adjustable, for use when ladder is to be fastened directly to flat surface, includes bolts and nuts for attaching to ladder	A76-325
H	FOUNDATION, for ladder, includes bolts and nuts.	A76-327

* Does not include instrument case. See Catalog Section 5, and order separately.

ANTI-PHAN

The Anti-Phan is designed to reduce the intensity of phantom indications. The Anti-Phan consists of a circular piece of wire cloth woven of fine black-oxidized brass wire so that there are many tiny openings per square inch. The disc is placed over the corrugated surface of the inner lens. It is made large enough so that the wire cloth may be wrapped around the edges of the lens. The lens and attached Anti-Phan are then fastened in place with the regular lens bezel ring. When light from an external source is reflected by the signal, the light must pass through the meshes of the Anti-Phan twice, going in and coming out. The fine black meshes tend to diffuse and weaken the reflected light.

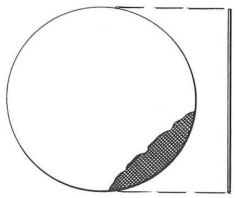

To order, specify "Anti-Phan, Catalog No. A73-205"

LENS UNITS

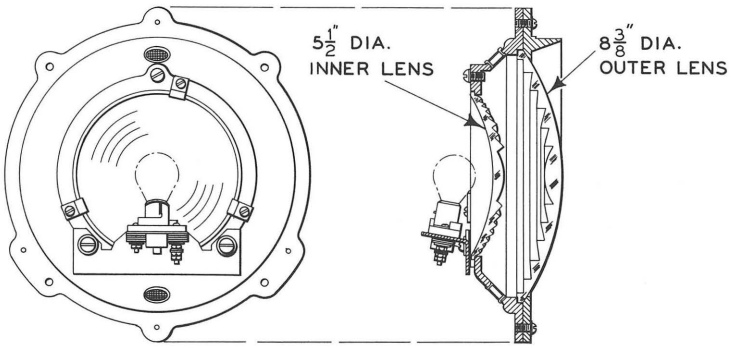

A - For tangent track.

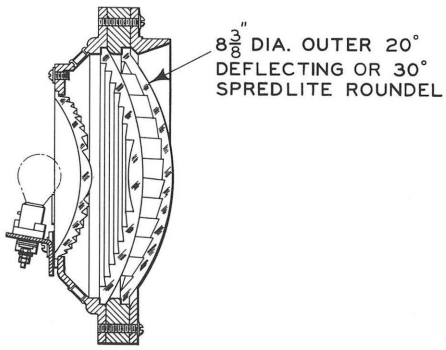

B - For curved track.

To order, specify "Lens Unit," and give catalog number.

REF.	INNER LENS	OUTER ROUNDEL	CATALOG NUMBER
A	Green	———	A73-210
A1	Yellow	———	A73-211
A2	Red	———	A73-212
B	Green	20° deflecting to right*	A73-215
B1	Yellow	"	A73-216
B2	Red	"	A73-217
B3	Green	20° deflecting to left*	A73-220
B4	Yellow	"	A73-222
B5	Red	"	A73-223
B6	Green	30° Spredlite	A73-225
B7	Yellow	"	A73-226
B8	Red	"	A73-227

* When looking thru peep sight.

WIRE ENTRANCE MATERIAL

The illustrations below represent our recommended standard assemblies for bringing wiring via flexible conduit or cable into signal heads.

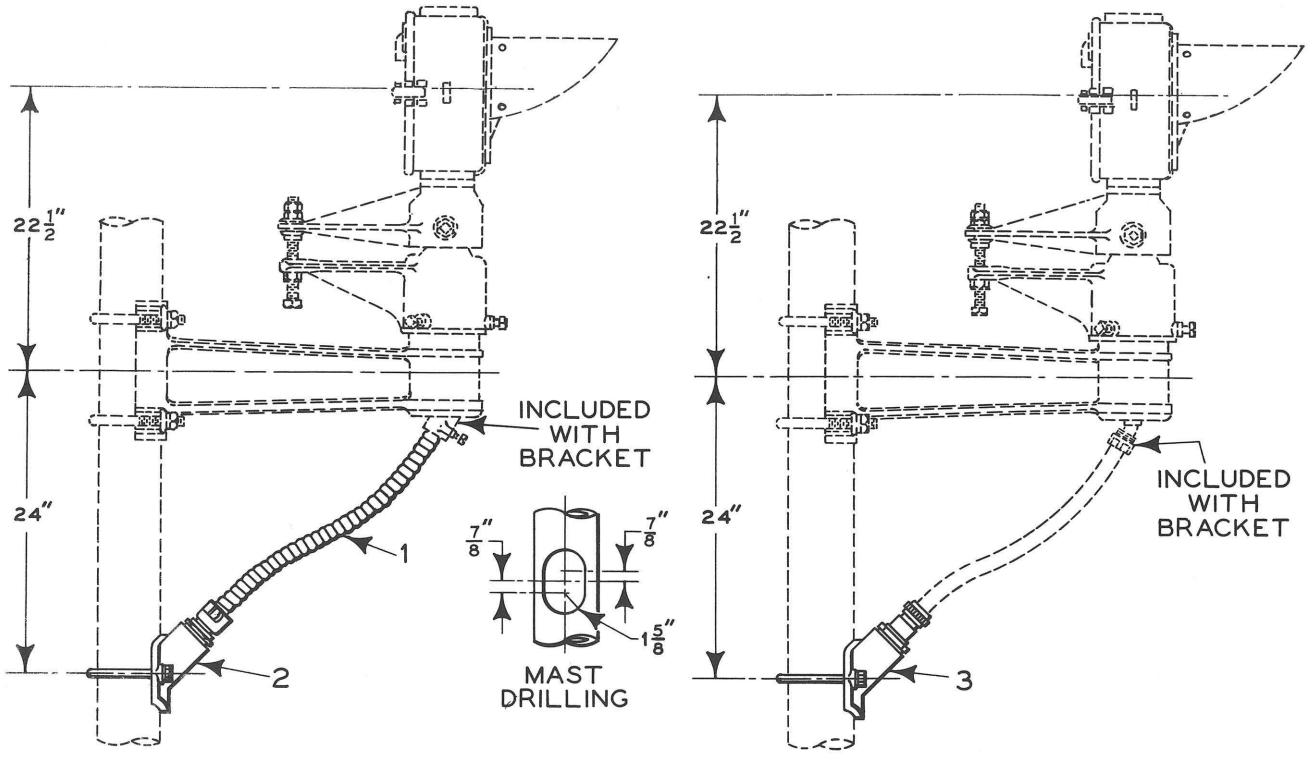

Order by catalog number and name shown in bold type

REF.	NAME	CATALOG NUMBER
	NOTE: THE FOLLOWING ITEMS ARE NOT FURNISHED WITH SIGNALS AND SHOULD BE ORDERED SEPARATELY IF NEEDED.	
1	CONDUIT, 1-1/2" flexible, length 2'-3"	A85-868
2	COUPLING, complete with "U" bolt, reducer and gasket, for 1 1/2" flexible conduit	A76-568
3	COUPLING, complete with "U" bolt, reducer and gasket, for 3/4" to 7/8" dia. cable	A76-530
3a	COUPLING, complete with "U" bolt, reducer, and gasket for 7/8" to 1.0" dia. cable	A76-531
3b	COUPLING, complete with "U" bolt, reducer, and gasket for 1.0" to 1-3/16" dia. cable	A76-532

CATALOG SECTION 73

Types FA, MD, ME and MF Color-Light Dwarf Signals

CONTENTS

	Page
Type FA	54
Type MD	60
Type ME	58
Type MF	62
Roundels	64
General Information	52
How to Order	52

Parts lists are available on request

GENERAL RAILWAY SIGNAL COMPANY

ROCHESTER, NEW YORK

Printed in U. S. A.

December 1959

Types FA, MD, ME and MF Color-Light Dwarf Signals

GENERAL DESCRIPTION

The Types FA, MD, ME and MF are compact, dwarf signals of the color-light type. They have no moving parts and all have the same doublet lens combinations.

LENSES

All signals are furnished with optical arrangements for tangent track. Roundels may be added in front of the lens combination to adapt signals to curved track. Roundels come complete with the necessary hardware for installing. Sealing compound, not included, must be applied to rings when adding roundels.

The clear, 6-3/8 inch diameter outer lens is a smooth face, optical type with a 40-degree deflecting bullseye in the center. This lens combination deflects part of the beam 40 degrees upward for close-up indications.

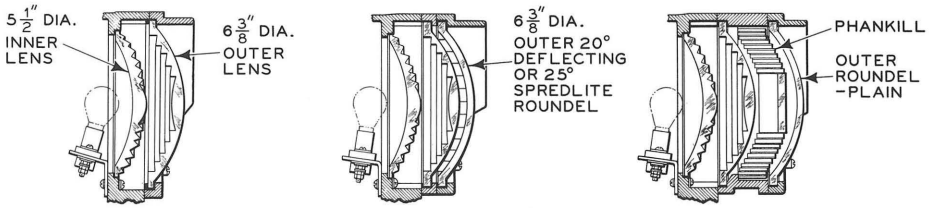

FOR TANGENT TRACK | WITH DEFLECTING OR SPREDLITE ROUNDEL | WITH PHANKILL UNIT

PHANKILL

Signals are available with and without Phankills. The Phankill reduces the possibility of phantom aspects. (The Phankill is described fully in GRS publication D50.0101).

LAMPS and RESISTORS

GRS precision filament lamps must be used to get the best aspect. Lamp assemblies are factory focused. If GRS precision filament lamps are used, lamps may be replaced in the field without refocusing. The Types FA, MD, ME and MF signals are furnished with a single-contact, candelabra, 2-pin, bayonet base lamp for each unit. See GRS Assemblies Catalog, Section 46, and specify lamps desired. Signals are available with or without lamp resistors.

HOW TO ORDER

Ordering references are so arranged that signals may be ordered with or without adjustable resistor, also with or without Phankill.

Your choices of lamp bulbs are included with each signal but must be specified separately from Catalog Section 46.

Order the following items separately, as needed:

1. Deflecting or Spredlite roundels, page 64. As furnished, all signals have lenses for tangent track only.
2. Foundation bolts, Catalog Section 3.

Memoranda

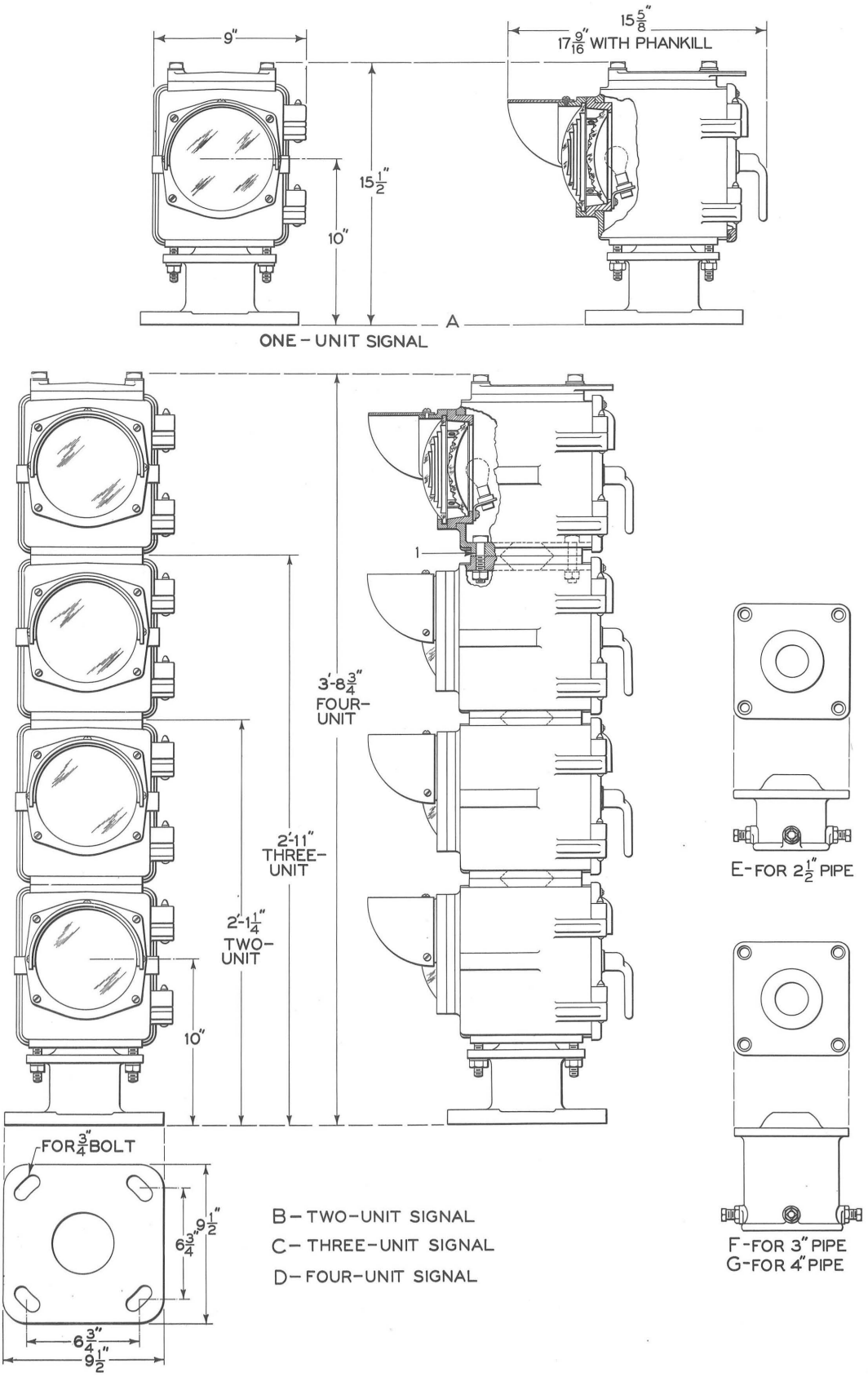

Type FA signal.

TYPE FA SIGNAL

The Type FA signal is of unit construction. Type FA units may be mounted one atop the other. Space is provided in each signal unit for a Type K-1/2 transformer, see Catalog Section 95.

A foundation mounting base is furnished with the Type FA signal as standard equipment. The four holes in the base are slotted. This allows the signal to be rotated slightly to the right or left for accurate, final alignment. The FA signal may be tilted by loosening the two front bolts holding the signal on its base and then tightening the two rear bolts - or vice versa.

Three pole-mounting sockets are available to mount FA signals on 2-1/2", 3", or 4" I.D. pipe, but must be ordered separately, if required.

To order, specify "Type FA Signal" and give catalog number. Each signal head includes ventilators and lamp bulbs. Specify lamp bulbs desired by catalog number, see Catalog Section 46.

The signal listed as being furnished with lamp resistor has a two-ohm adjustable resistor, maximum current 1.75 amperes, in the common return of each one-unit signal and in the bottom unit only - of each two - and three-unit signal. The four-unit signal listed with resistors has one in each unit.

ONE-UNIT SIGNAL

REF.	ASPECTS	CATALOG NUMBER	
		WITHOUT RESISTOR	WITH RESISTOR
A	Red - No Phankill	A73-500	A73-510
A1	Yellow - No Phankill	A73-502	A73-512
A2	Red - With Phankill	A73-504	A73-514
A3	Yellow - With Phankill	A73-506	A73-516

TWO-UNIT SIGNAL

REF.	ASPECTS	CATALOG NUMBER	
		WITHOUT RESISTOR	WITH RESISTOR
B	Yellow/Red - No Phankills	A73-520	A73-530
B1	Green/Red - No Phankills	A73-522	A73-532
B2	Yellow/Red - With Phankills	A73-524	A73-534
B3	Green/Red - With Phankills	A73-526	A73-536

THREE-UNIT SIGNAL

REF.	ASPECTS	CATALOG NUMBER	
		WITHOUT RESISTOR	WITH RESISTOR
C	Green/Yellow/Red - No Phankills	A73-540	A73-550
C1	Red/Yellow/Green - No Phankills	A73-542	A73-552
C2	Green/Yellow/Red - With Phankills	A73-544	A73-554
C3	Red/Yellow/Green - With Phankills	A73-546	A73-556

(Continued on following page)

TYPE FA SIGNAL

FOUR-UNIT SIGNAL

REF.	ASPECTS	CATALOG NUMBER	
		WITHOUT RESISTOR	WITH RESISTOR
D	Red/Green/Yellow/Red - No Phankills	A73-560	A73-570
D1	Green/Red/Yellow/Red - No Phankills	A73-562	A73-572
D2	Red/Green/Yellow/Red - With Phankills	A73-564	A73-574
D3	Green/Red/Yellow/Red - With Phankills	A73-566	A73-576

POLE MOUNTING SOCKETS

Order by catalog number and name shown in bold type

REF.	NAME	CATALOG NUMBER
E	SOCKET, for pole mounting FA signals, fits 2 1/2" I.D. pipe	A73-590
F	SOCKET, for pole mounting FA signals, fits 3-inch I.D. pipe	A73-592
G	SOCKET, for pole mounting FA signals, fits 4-inch I.D. pipe	A73-594

Order following items separately as needed:

1. Deflecting or Spredlite roundels, page 64. As furnished, all signals have lenses for tangent track only.
2. Type K 1/2 Transformers, Catalog Section 95.
3. Foundation bolts, Catalog Section 3.

Memoranda

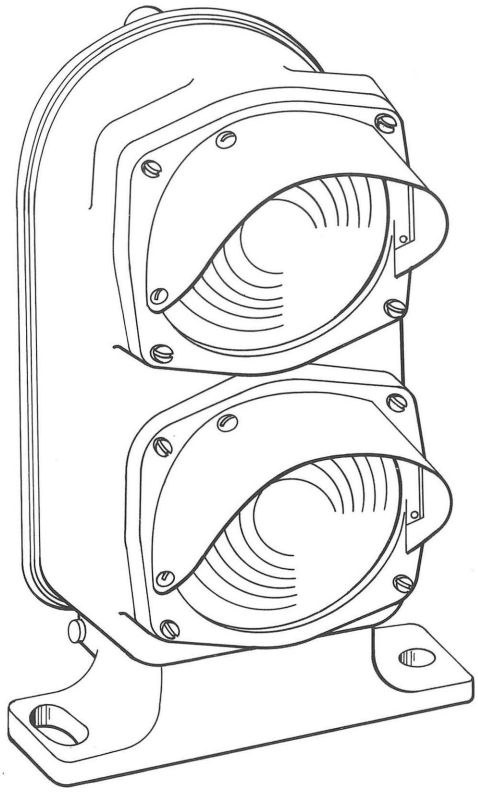

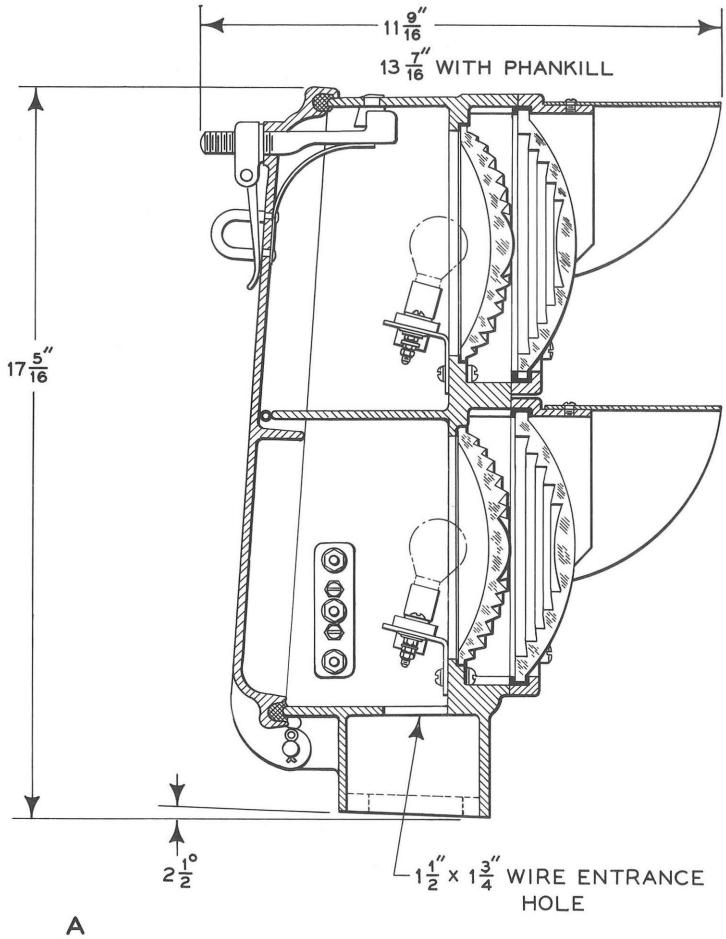

A

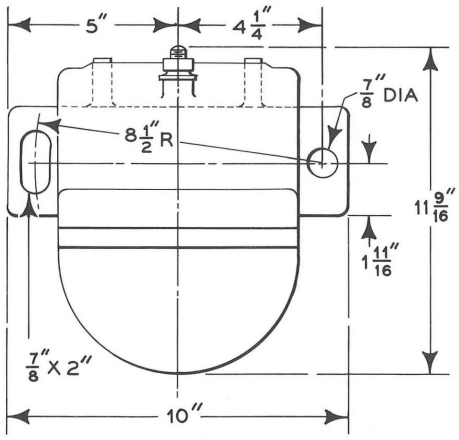

Type ME signal.

TYPE ME SIGNAL

The Type ME color-light signal is described fully in GRS Bulletin 175.

A terminal block with three A. A. R. posts is provided in each signal.

As shown, the signal base provides a 2 1/2-degree upward tilt to the light beams when the signal is mounted on a horizontal plane surface. The mounting base has one slotted foundation bolt hole which allows the signal to be pivoted slightly, for accurate alignment.

To order, specify "Type ME Signal" and give catalog number. Each signal includes lamp bulbs. Specify lamp bulbs desired by catalog numbers, see Catalog Section 46.

The signals listed as being furnished with lamp resistor have a two-ohm adjustable resistor, maximum current 1.75 amperes, in the common return.

REF.	ASPECTS	CATALOG NUMBER	
		WITHOUT RESISTOR	WITH RESISTOR
A	Yellow/Red - No Phankills	A73-600	A73-610
A1	Green/Red - No Phankills	A73-602	A73-612
A2	Yellow/Red - With Phankills	A73-604	A73-614
A3	Green/Red - With Phankills	A73-606	A73-616

Order following items separately as needed:

1. Deflecting or Spredlite roundels, page 64. As furnished, all signals have lenses for tangent track only.
2. Foundation bolts, Catalog Section 3.

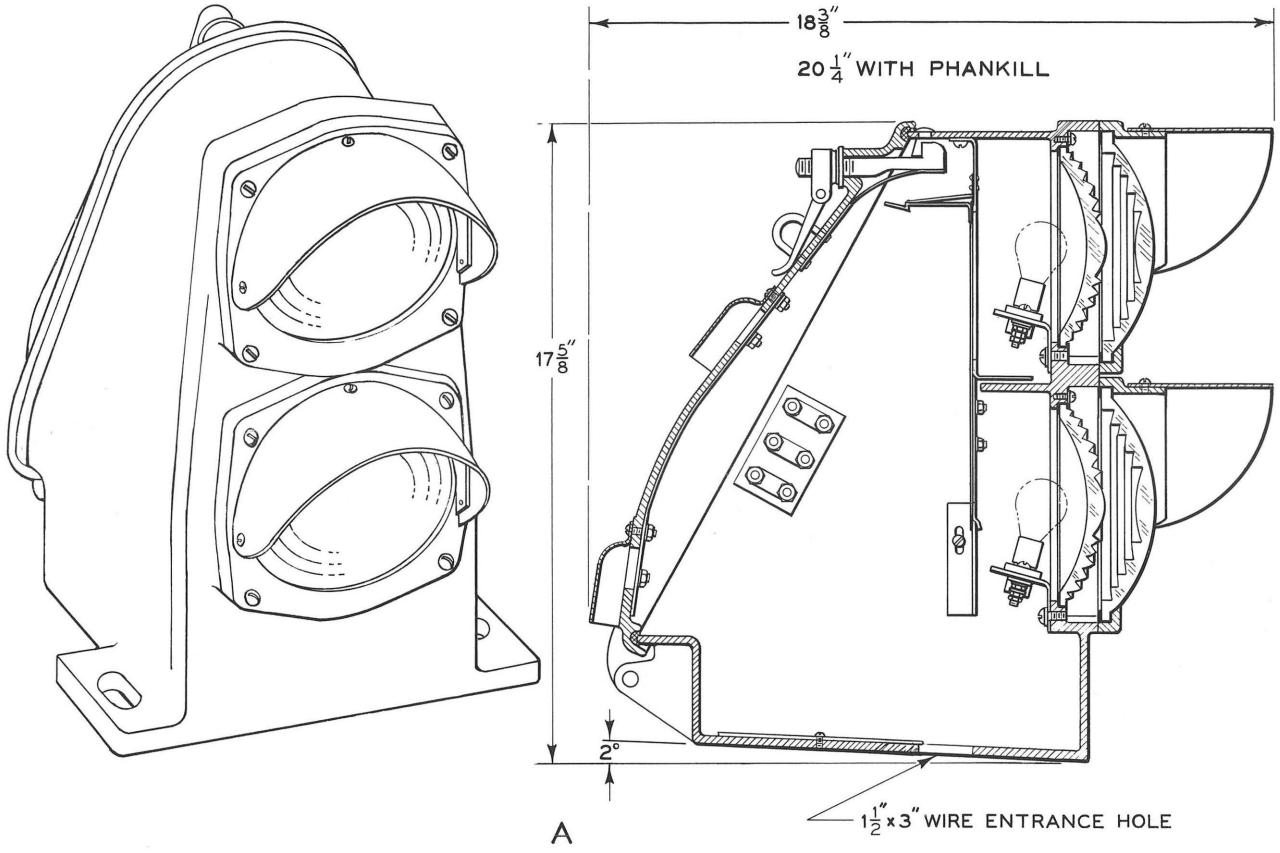

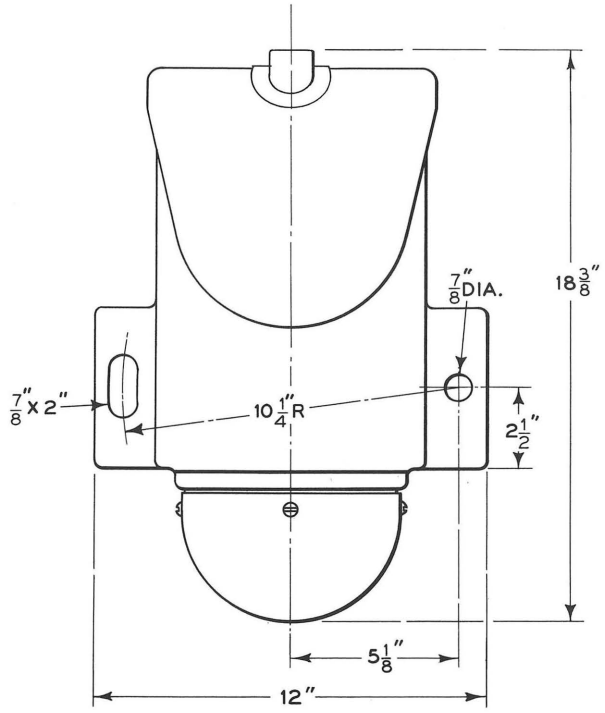

Type MD signal.

TYPE MD SIGNAL

The Type MD color-light signal is fully described in GRS Bulletin 175.

The MD signal case has space for a Type K relay, etc. as shown.

A terminal block with six A. A. R. posts is provided in each signal.

As shown, the signal base provides a 2-degree upward tilt to the light beams when the signal is mounted on a horizontal plane surface. The mounting base has one slotted foundation bolt hole which allows the signal to be pivoted slightly, for accurate alignment.

To order, specify "Type MD signal" and give catalog number. Each signal includes ventilators and lamp bulbs. Specify lamp bulbs desired by catalog number, see Catalog Section 46.

The signals listed as being furnished with lamp resistor have a two-ohm adjustable resistor, maximum current 1.75 amperes in the common return.

REF.	ASPECTS	CATALOG NUMBER	
		WITHOUT RESISTOR	WITH RESISTOR
A	Yellow/Red - No Phankills	A73-630	A73-640
A1	Green/Red - No Phankills	A73-632	A73-642
A2	Yellow/Red - With Phankills	A73-634	A73-644
A3	Green/Red - With Phankills	A73-636	A73-646

Order following items separately as needed:

1. Deflecting or Spredlite roundels, page 64. As furnished, all signals have lenses for tangent track only.
2. Type S transformers, Catalog Section 95.
3. Type K relays, Catalog Section 65.
4. Foundation bolts, Catalog Section 3.

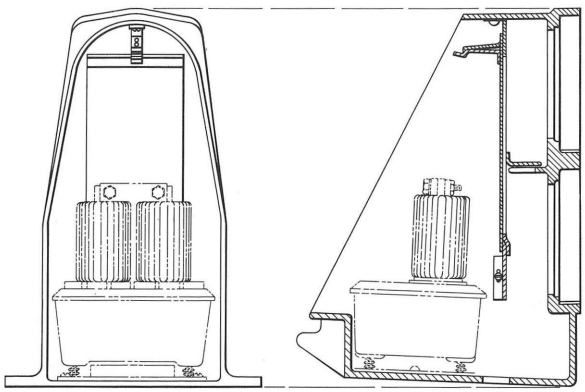

Space is available for housing a Type K4 relay

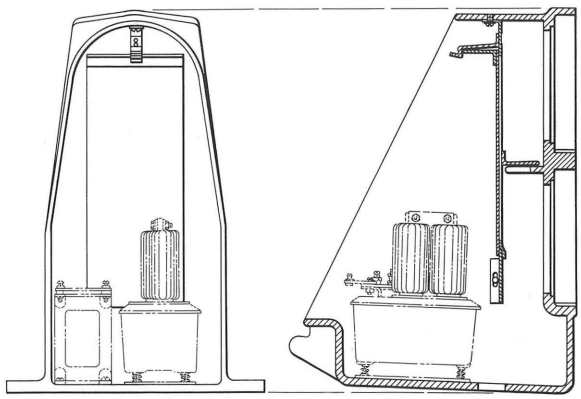

Space is available for housing a Type K2 relay and a Type S transformer

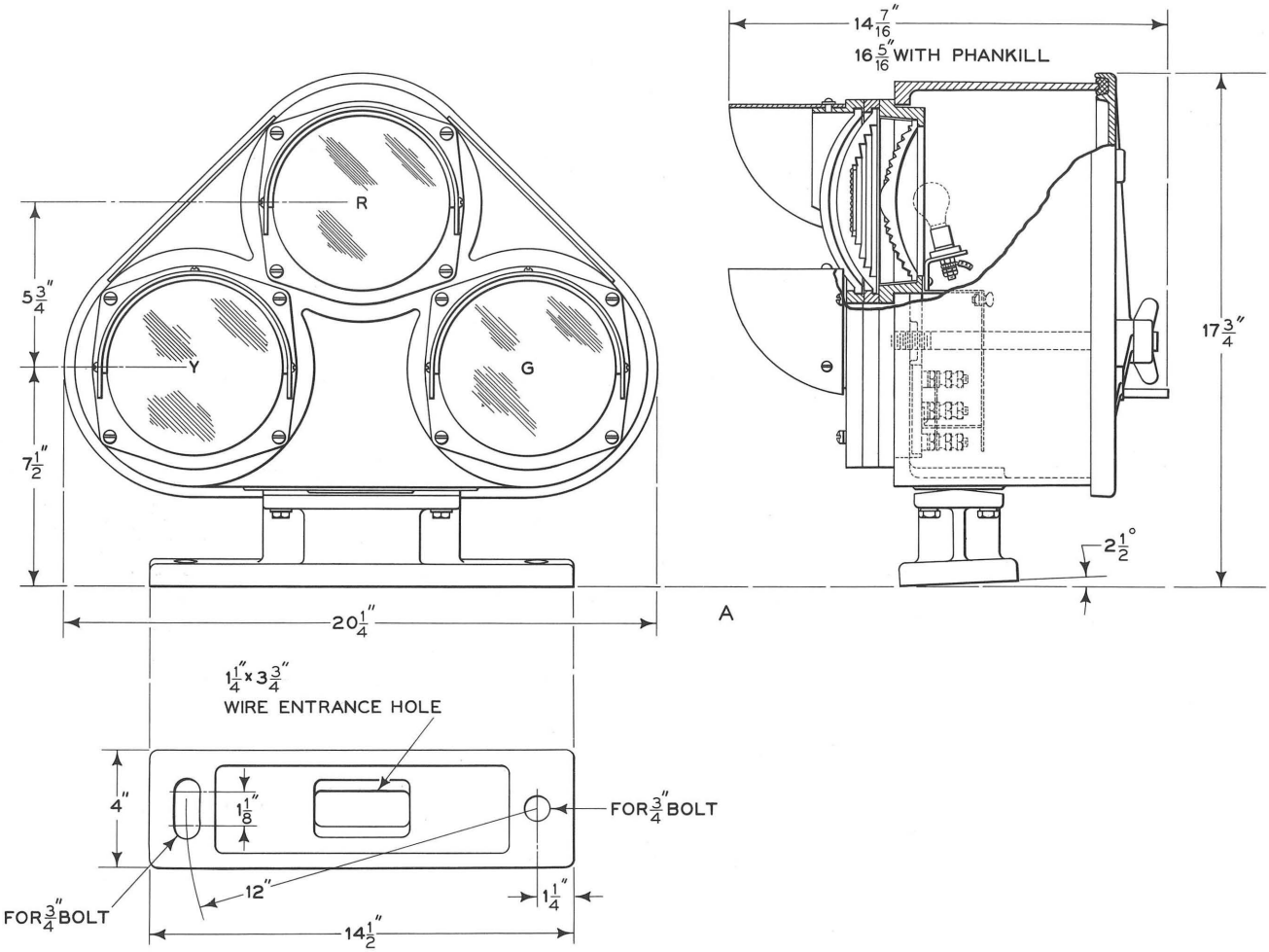

Type MF signal.

TYPE MF SIGNAL

The Type MF signal is a color-light signal with a triangular case.

The Type MF signal is designed for ground mounting where clearances are limited, and a three-aspect dwarf signal is required. A terminal block with six A. A. R. posts is provided in each signal.

As shown the signal base provides a 2 1/2-degree upward tilt to the light beams when the signal is mounted on a horizontal plane surface. Additional tilt, either backward or forward, is provided by adjusting screws in the base. The mounting base has one slotted foundation bolt hole which allows the signal to be pivoted slightly, for accurate alignment.

To order, specify "Type MF Signal" and give catalog number. Each signal includes lamp bulbs. Specify lamp bulbs desired by catalog number, see Catalog Section 46.

The signals listed as being furnished with lamp resistor have a two-ohm adjustable resistor, maximum current 1.75 amperes, in the common return.

REF.	ASPECTS	CATALOG NUMBER	
		WITHOUT RESISTOR	WITH RESISTOR
A	Red/Yellow/Green (no Phankills)	A73-660	A73-670
A1	Red/Yellow/Green (with Phankills)	A73-662	A73-672

Order following items separately as needed:

1. Deflecting or Spredlite roundels, page 64. As furnished, all signals have lenses for tangent track only.
2. Foundation bolts, Catalog Section 3.

ROUNDEL ASSEMBLIES

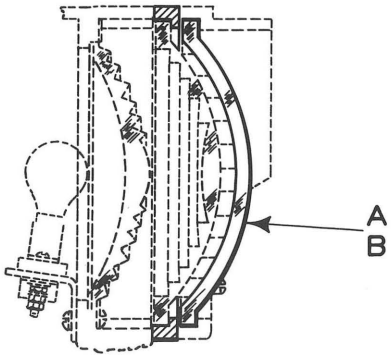

DEFLECTING OR SPREDLITE
ROUNDEL ASSEMBLY

All Types FA, MD, ME and MF signals are furnished with 6 3/8" doublet lens combinations for tangent track only. Order roundel assemblies below as required to adapt signals to specific conditions. All roundel assemblies come complete with necessary material for installing, except sealing compound. For this we recommend Vulcatex, gun grade for metal-to-metal surfaces and knife grade for roundels.

Order by catalog number and name shown in bold type

REF.	NAME	CATALOG NUMBER
A	**ROUNDEL ASSEMBLY** for MD and ME signals, 20° deflecting roundel, complete with all parts to install.	A76-690
A1	As above, except 25° Spredlite roundel.	A76-692
B	**ROUNDEL ASSEMBLY** for FA and MF Signals, 20° deflecting roundel, complete with all parts to install.	A76-694
B1	As above, except 25° Spredlite roundel.	A76-696

CATALOG SECTION 73

Type W Marker Lights
Color - Light Signals

Parts lists are available on request

GENERAL RAILWAY SIGNAL COMPANY
ROCHESTER, NEW YORK
Printed in U. S. A.

A1513

March 1963

Type W Marker Lights

GENERAL INFORMATION

The Type W marker light mounts on a five-inch mast, the same size mast as GRS searchlight signals, and may be used as a vertical or staggered marker with same. However, it should be noted that beam intensity of the Type W is less than that of the searchlight type marker light, which is listed in Catalog Section 76. Anti-Phans for Fig. B and "T" or "S" stencils for Fig. A, optional equipment, are listed for separate ordering.

OPTICAL ARRANGEMENTS

This marker is furnished with optical arrangements as in Fig. A, with reflector and 8-3/8" diameter outer colored roundel, or as in Fig. B, with a doublet lens combination. Both are for tangent track and are not adapted for use with spredlite or deflecting roundels.

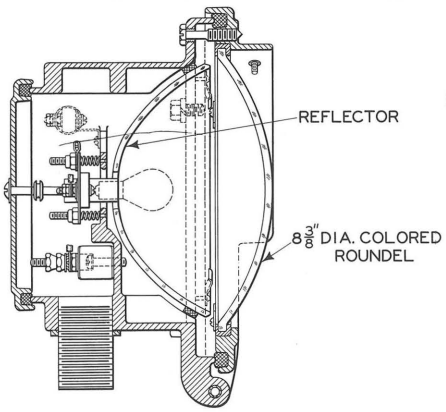

Fig. A - With reflector and roundel

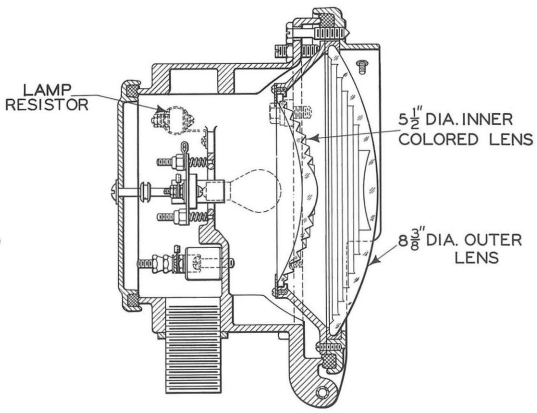

Fig. B - With doublet lens

The reflector type marker, Fig. A, has an 8-3/8 inch roundel, available as red or as white frosted for use with stencil.

The doublet lens type marker, Fig. B, has a 5-1/2 inch red inner lens and an 8-3/8 inch outer lens. A 40-degree close-up deflector is part of the outer lens.

LAMPS

GRS precision filament lamps must be used to get the best aspect. Lamp assemblies are factory focused. Lamps may be replaced in the field without refocusing, if GRS precision filament lamps are used for replacements. The Type

W Marker is furnished with a single-contact, candelabra, 2-pin, bayonet base lamp. See GRS Assemblies Catalog, Section 46, and specify lamp desired.

ALIGNMENT

The mounting clamp allows the unit to be mounted either in front of mast or 9" to right or left of center of mast. The signal is provided with a 1-1/4" threaded nipple for receiving a coupling for 3/4" flexible conduit.

HOW TO ORDER

To order a complete marker, select from assemblies on page 75. If conduit and fittings as required, order separately from page 75.

Anti-Phan and stencils "T" or "S" must be ordered separately from page 76.

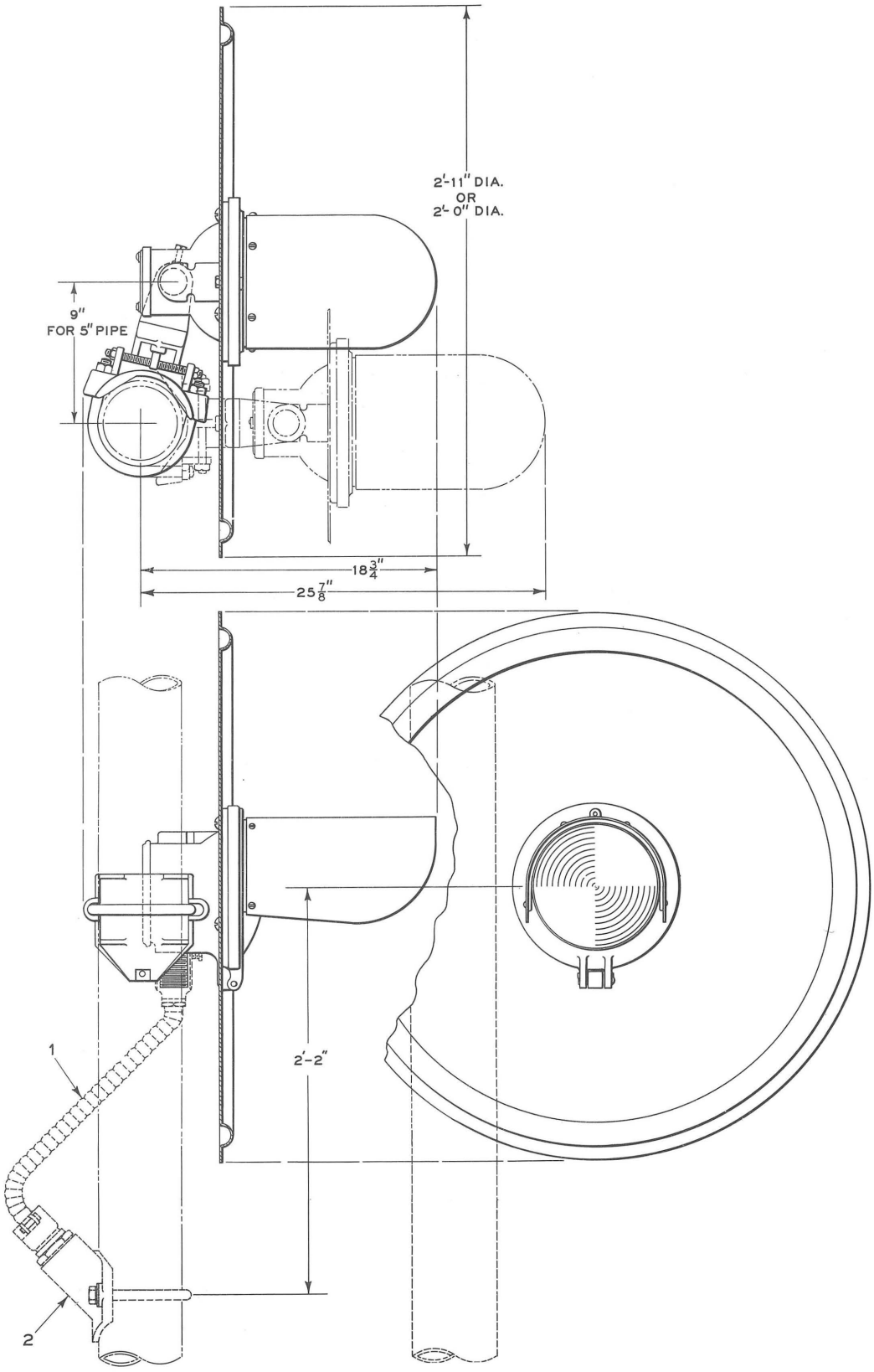

Type W marker light.

Type W Marker Lights Complete

To order, specify "Type W Marker" and give catalog number. Each marker includes a 1-1/4" threaded nipple for receiving a coupling for 3/4" flexible conduit. Marker includes your choice of lamp bulb, see Catalog Section 46 and specify choice by catalog number.

WITH REFLECTOR AND ROUNDEL

REF.	ASPECT	BACKGROUND	CATALOG NUMBER		
			WITHOUT RESISTOR	WITH 2-OHM, 1.75 AMP. RESISTOR	WITH 5-OHM 1.0 AMP. RESISTOR
A	Red	2'-11" dia.	A73-800	A73-808	A73-816
A1	*Frosted	2'-11" dia.	A73-801	A73-809	A73-817
A2	Red	2'-0" dia.	A73-802	A73-810	A73-818
A3	*Frosted	2'-0" dia.	A73-803	A73-811	A73-819
WITH DOUBLET LENS					
B	Red	2'-11" dia.	A73-830	A73-839	A73-843
B1	Red	2'-0" dia.	A73-835	A73-840	A73-845

*For use with stencil "T" or "S"

THE FOLLOWING ITEMS ARE NOT FURNISHED WITH MARKERS AND SHOULD BE ORDERED SEPARATELY AS REQUIRED

Order by catalog number and name shown in bold type

REF.	NAME	CATALOG NUMBER
1	CONDUIT COMPLETE, 3/4" flexible, includes all parts for connecting unit to coupling Ref. 2	P73-233
2	COUPLING, complete with U bolt, for 3/4" flexible conduit	A73-860

ANTI-PHAN

FOR DOUBLET-LENS MARKER LENS

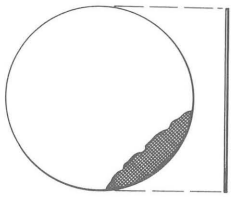

The Anti-Phan is designed to reduce the intensity of phantom indications. The Anti-Phan consists of a circular piece of wire cloth woven of fine black-oxidized brass wire so that there are many tiny openings per square inch. The disc is placed over the corrugated surface of the inner lens. It is made large enough so that the wire cloth may be wrapped around the edges of the lens. The lens and attached Anti-Phan are then fastened in place with the regular lens bezel ring. When light from an external source is reflected by the signal, the light must pass through the meshes of the Anti-Phan twice, going in and coming out. The fine black meshes tend to diffuse and weaken the reflected light.

To order, specify "Anti-Phan, Catalog No. A73-205"

STENCILS

FOR REFLECTOR AND ROUNDEL MARKER LIGHTS

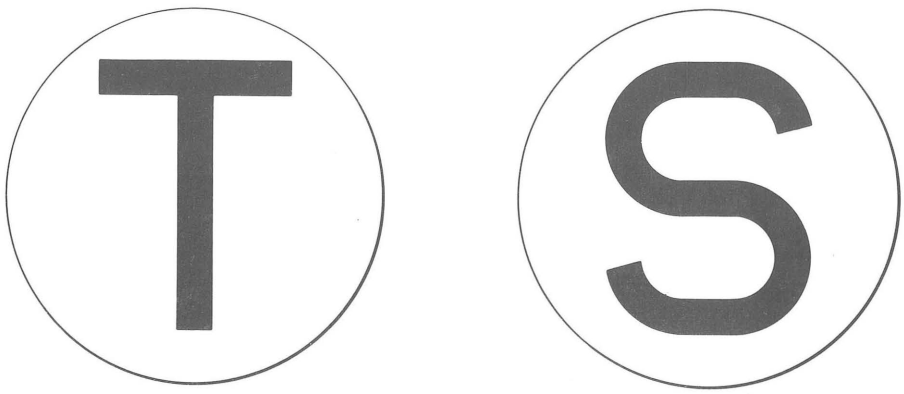

The stencil is assembled under clips which hold roundel in place.

To order, specify "Stencil", Catalog No. A73-850 for "T" or A73-851 for "S"

File in Catalog
Section 76

CHANGE NOTIFICATION SHEET

AIR GAP LIGHTNING ARRESTER FOR SEARCHLIGHT SIGNAL MECHANISMS

Type SA Searchlight Signal Lightning Protection

1. Plug coupled Type SA searchlight signal mechanisms with serial numbers below 55000 are equipped with a carborundum (semi-conductor) shunt insert, as shown in Figure 1. There is no ground connection from the shunt to the mechanism case.

2. Beginning with serial number 55000, plug coupled Type SA signal mechanisms will be provided with a new air gap lightning arrester instead of the carborundum shunt. The new arrester, shown in Figure 2, has infinity resistance to ground, and is located in the position formerly occupied by the carborundum shunt. It consists of an air gap from each operating coil terminal to ground (signal case). The ground connection is carried from the male to the female half of the plug coupler by means of a ground strap.

IMPORTANT: Before replacing an older SA mechanism with a new Type SA mechanism, examine the plug coupler of the new mechanism. If the new mechanism has a spring ground strap to the mechanism case, as shown in Figure 2, remove the old female half of the plug coupler containing the carborundum shunt insert. Attach the female half of the new plug coupler containing the air gap lightning arrester before the new mechanism is operated.

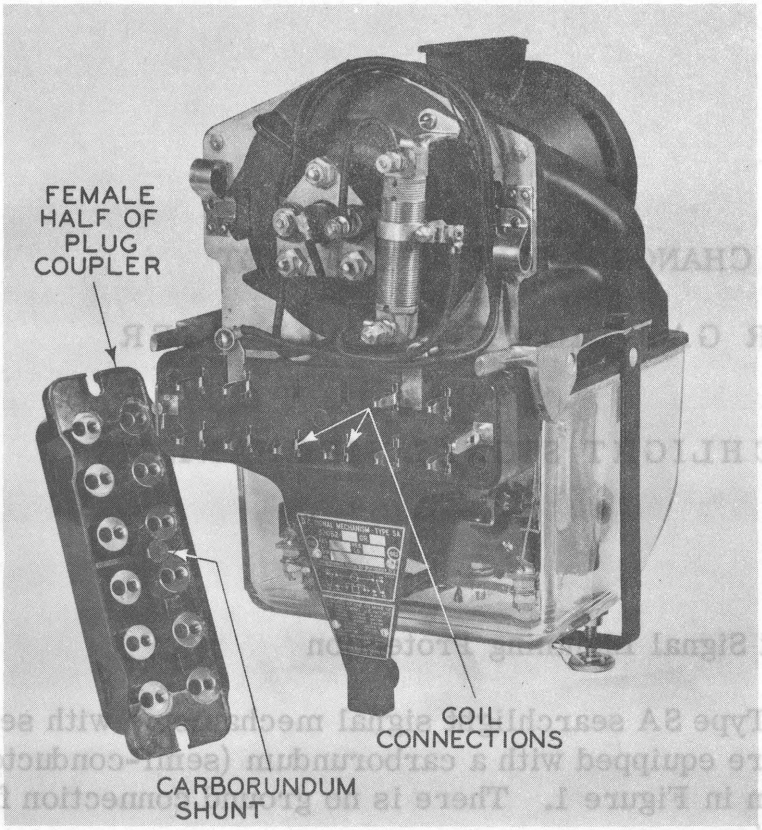

Figure 1. Type SA signal mechanism, showing carborundum shunt insert located between input terminals to the operating coils.

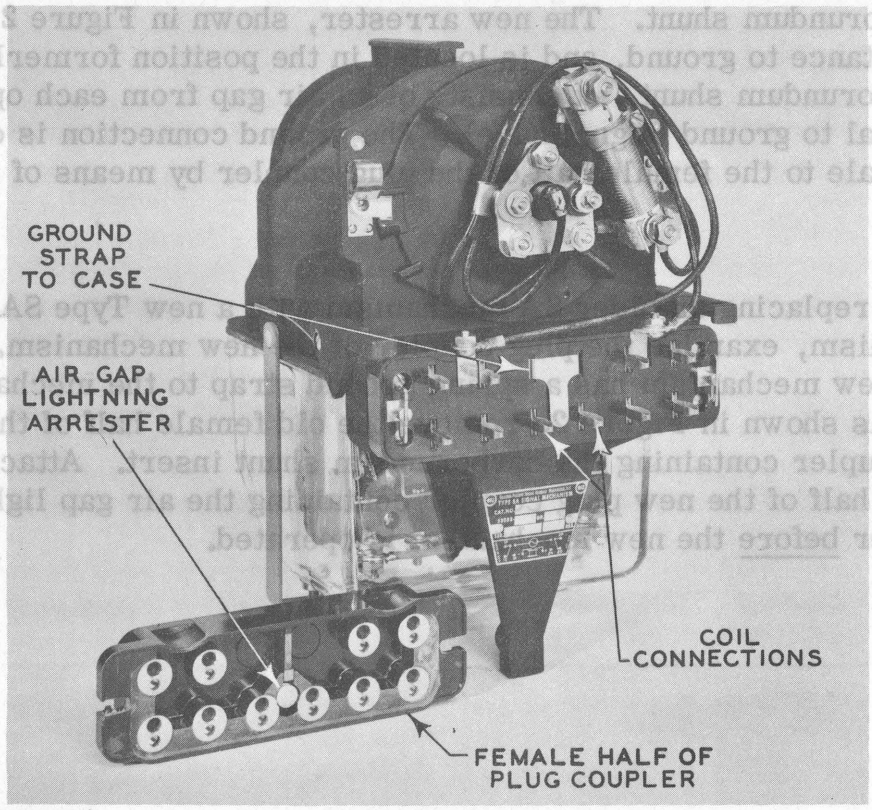

Figure 2. Type SA signal mechanism, showing new air gap lightning arrester, and ground strap to case.

File in Section 76
Assemblies Catalog

CHANGE NOTIFICATION SHEET

TYPE SA-1 SIGNAL MECHANISM
OBSOLETES TYPE SA MECHANISM

The GRS Type SA-1 searchlight signal mechanism is a direct replacement for the obsolete Type SA mechanism. The SA-1 fits all SA signal housings now being supplied.

Refer to GRS Change Notification Sheets A802-34 for very early SA housings, and to A802-69 for SA mechanisms with serial numbers under 55000.

File in Section 76
Assemblies Catalog

CHANGE NOTIFICATION SHEET

TYPE SA-1 SIGNAL MECHANISM
OBSOLETES TYPE SA MECHANISM

The GRS Type SA-1 searchlight signal mechanism is a direct replacement for the obsolete Type SA mechanism. The SA-1 fits all SA signal housings now being supplied.

Refer to GRS Change Notification Sheets A802-84 for very early SA housings, and to A802-69 for SA mechanisms with serial numbers under 55000.

TYPE SA-1 SEARCHLIGHT SIGNAL

GRS DEVELOPMENT D50.0102

GENERAL RAILWAY SIGNAL COMPANY

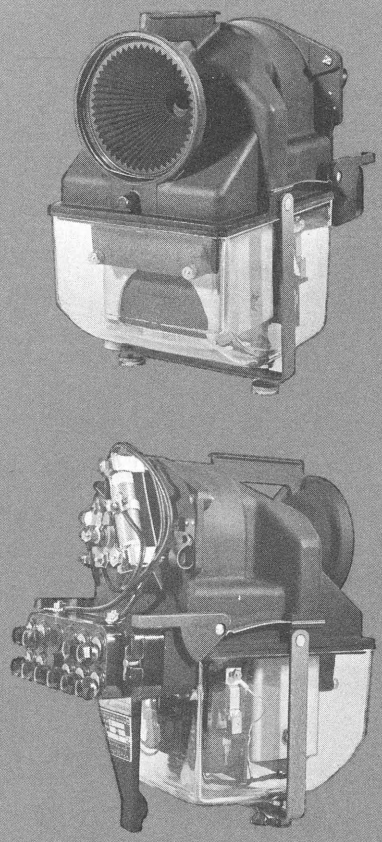

FIGURE 1. TYPE SA-1 SIGNAL MECHANISM

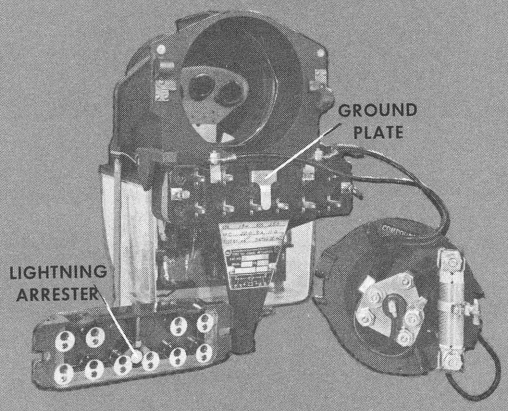

FIGURE 2. LAMP REFLECTOR AND PLUG COUPLER REMOVED

THE INFORMATION CONTAINED HEREIN IS INTENDED AS ILLUSTRATIVE ONLY AND IS FURNISHED WITHOUT ASSUMING ANY OBLIGATIONS. THE DESCRIPTION AND ILLUSTRATIONS OF CIRCUITS, SYSTEMS AND DEVICES HEREIN DO NOT CONVEY TO THE PURCHASER OF ANY SUCH DEVICES A LICENSE TO SUCH CIRCUITS AND SYSTEMS THAT MAY BE COVERED BY THE PATENTS OF THE GENERAL RAILWAY SIGNAL CO. OR OTHERS.

COPYRIGHT 1963 GENERAL RAILWAY SIGNAL COMPANY

JANUARY 1963 A-1930 PRINTED IN U.S.A.

INTRODUCTION

The Type SA-1 searchlight signal, basically similar to the Type SA searchlight signal, incorporates a number of improvements which provide increased operating efficiency. The major improvements include: a redesigned electromagnetic structure, increased back contact pressure, positive contact closure, and precise color-disc positioning.

Like the SA, the Type SA-1 signal is designed to operate from battery or rectified a-c. It projects three aspects – red, yellow, and green – through a single optical system. The optical system produces a powerful signal aspect with minimum energy consumption. Daylight range with a compound lens system for tangent track is one mile, with a 5-watt lamp.

The mechanism uses a rotary movement principle to position the spectacle arm. The polarity of the control circuit determines whether a yellow or a green color disc is positioned in the light beam. When the circuit is deenergized, the red color disc is positioned, by gravity, to color the beam.

DESCRIPTION

The Type SA-1 signal mechanism, Figure 1, fits Type SA signal housings now being supplied.

The redesigned "yellow" and "green" contacts feature twice the back contact pressure to provide more uniform pressure throughout their useful life. A large diameter flywheel, friction mounted on the spectacle shaft, provides "follow-through" inertia so that the contacts close positively, without rebound, in the green and yellow positions. Color flashes are thus eliminated. Suspension counterweights snub the contacts to a clean, solid closure in the red position.

Figure 2 shows the SA-1 mechanism with the lamp and reflector holder removed. The reflector holder features a plug-in, adjustable lamp resistor, which makes it easy to match the lamp you plan to use. Resistors are available in three different resistances - one, two, and five ohms. Also in Figure 2, the removable half of the plug coupler shows the air-gap lightning arrester which provides a path from case to control wires for surges in excess of 2000 volts.

The spectacle arm, which carries the color discs, is inclined toward the reflector so that each color disc is positioned just out of the maximum heat area of the reflector's focal point. This arrangement protects the color discs against thermal shock, yet provides for full, effective coloring of the light beam. Also, by slanting the color disc, dilution of the color aspect due to mirror effect is prevented, since outside light returning from the front of the signal is reflected upward, rather than back into the color beam.

The spectacle shaft assembly has stops of laminated phenolic, a proven material used with excellent results in highway flashing and code-responsive relays. The shaft is supported by knife edge bearings of a type which, while practically friction free, have demonstrated outstanding ability to withstand wear and vibration in the Type SA mechanism.

The design of the electromagnet structure allows substantial clearance between moving and stationary parts. Quarter-inch air gap – four times greater than in the Type SA mechanism – ensures against interference from foreign material.

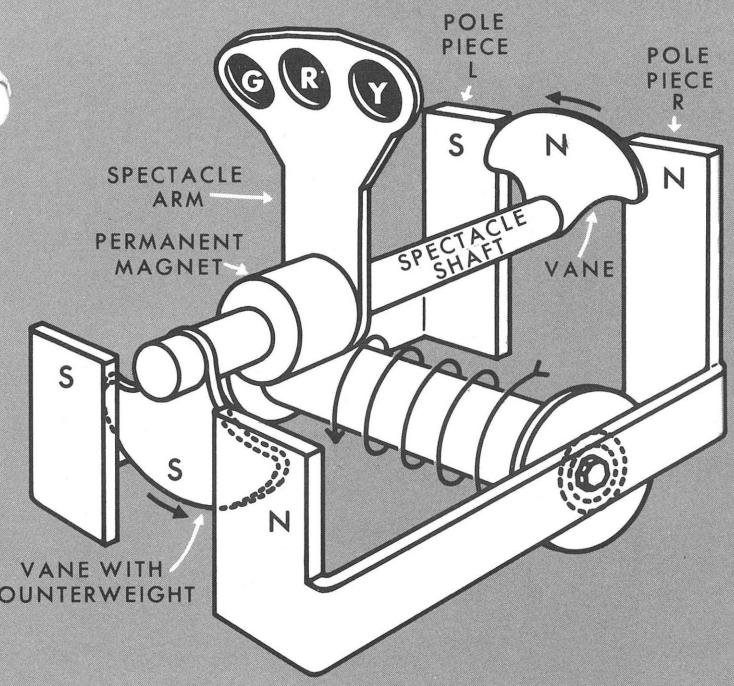

FIGURE 3. PRINCIPLES OF OPERATION

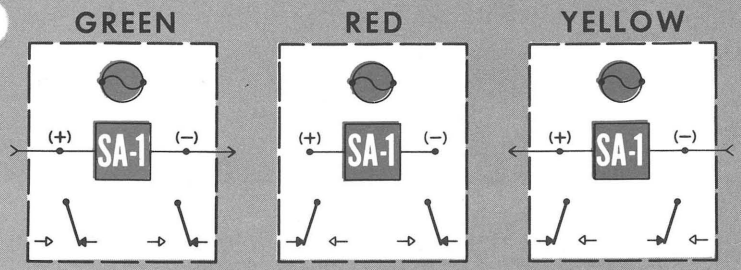

FIGURE 4. TYPE SA-1 MECHANISM CONTACT POSITIONS— VIEW FACING TERMINAL BLOCK

OPERATION

The principles of operation for the Type SA-1 mechanism are illustrated in Figure 3. Polar operation is effected by a permanent magnet, mounted on the spectacle shaft, which polarizes the upper vane north (N) and the lower vane (with counterweight) south (S). The stationary coil, suspended below the spectacle shaft, controls the polarity of pole pieces R and L. With the spectacle shaft assembly isolated from the coil, the possibility of surge currents entering and causing damage to the knife edge bearings is eliminated.

With no energy applied to the coil, the spectacle arm is held in the center (red) position by gravity, due to the counterweight. When energy is applied to the coil, with polarity as shown, pole piece R on the electromagnet is polarized north, and pole piece L is polarized south. As unlike poles attract, the south pole of the permanent magnet (lower vane) is attracted to pole piece R, and the north pole (upper vane) is attracted to pole piece L. As a result, the yellow color disc is positioned in the light beam.

When the polarity of the coil is reversed, the magnetic flux in the core is also reversed. Rotation of the armature in the opposite direction then positions the green color disc in the light beam.

A copper slug on the core of the electromagnet dampens the movement of the spectacle arm when energy is removed from the coil. This electromagnetic damping action, together with the nonbounce characteristics of the mechanical movement, positions each color disc precisely and accurately. This positioning is accomplished without overtravel, which could result in a momentary display of an improper aspect.

CONTACT POSITION

Contact position in relation to the polarity of the applied voltage is shown in Figure 4. The contacts are operated by two counterweights which, in turn, are operated through link connections to the rotating spectacle arm.

DIMENSIONS AND WEIGHTS

SIGNAL HOUSING DIMENSIONS

Overall length of signal, including hood – compound lens system . . 34 in.

Overall length of signal, including hood – stepped lens system 29-3/4 in.

Overall height of signal – either optical system . . . . . 27-7/8 in.

Lens bezel ring, overall diameter. . . . . 10 in.

WEIGHT

Signal housing and signal mechanism — stepped lens arrangement . . . . . 140 lbs. total

Signal housing and signal mechanism – compound lens arrangement. . . . 160 lbs. total

Signal mechanism only. . . . . 25 lbs.

ELECTRICAL CHARACTERISTICS

The connection diagram for the Type SA-1 signal is shown in Figure 5. The signal, with a coil resistance of 250 ohms, is designed to operate on 10 volts (5 lead cells or equivalent). The minimum current required for proper operation is 24 ma.

Wires from the plug coupler to the contacts, including the coil wires, are equipped with quick-detachable terminals which require no soldering.

Operating times for the Type SA-1 signal, at 10 volts d-c, are as follows:

Time to close contact from red (deenergized) to yellow (or red to green). . . . . 0.65 sec.

Time to close red (deenergized) contact from either green or yellow position (time starts when energy is removed) . . . . . 0.58 sec.

Time to close green contact from yellow position (or yellow contact from green position) after energy is pole-changed . . . . . 0.58 sec.

Time yellow to green contact is open (or green to yellow contact is open) during pole change (time that circuit to yellow-green repeater relay is open) . . . . . 0.165 sec.

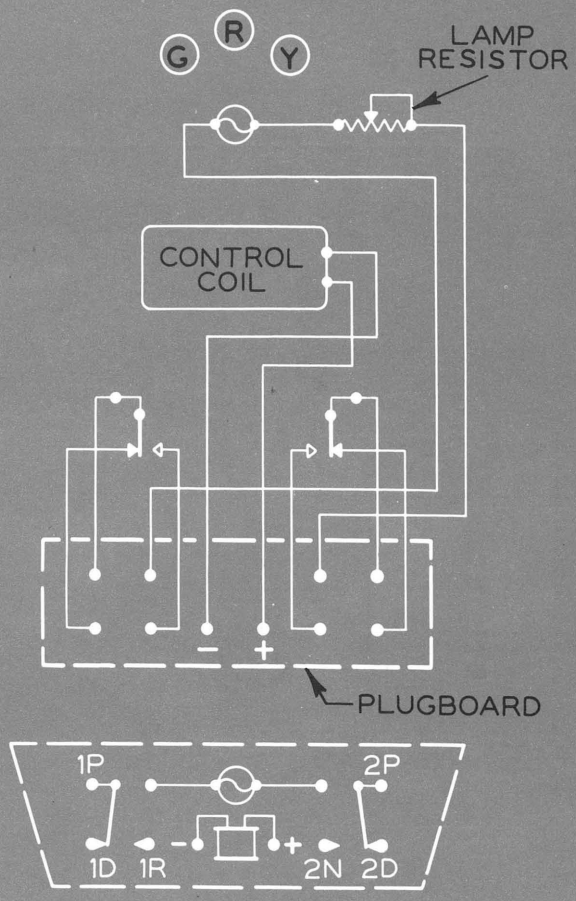

FIGURE 5. TYPE SA-1 SIGNAL CONNECTION DIAGRAM—VIEW FACING PLUGBOARD

A Check List OF SA-1 SIGNAL FEATURES

- Aspect-checking contacts directly operated by counterweights.
- All color discs slanted to minimize beam dilution.
- Choice of compound lens or stepped lens optical system.
- Available with 20-degree deflecting roundel or with 30-degree Spredlite roundel.
- Available with Phankill unit.
- Includes a wide choice of wire entrance couplings.
- Precision filament lamp, no refocusing needed when changing out.
- Plug-coupled connections. Plug coupler has built-in surge arrester—provides a discharge gap between each control wire and the signal case.
- Plug-in, cartridge-type, adjustable lamp resistor.
- Available in wide choice of assemblies: one-, two-, or three-unit high signals; one-or two-unit dwarf signals; and one-, two-, or three-unit bracket post or bridge signals. Matching, single-aspect marker lights also available.
- Built-in sighting fixture, screened vents, easy-latching door, ample wiring space.
- Mechanically, electrically, and optically interchangeable with Type SA Signal. Same size, weight, and outer housing.

TOOLS FOR TRANSPORTATION
GRS
GENERAL RAILWAY SIGNAL COMPANY
ROCHESTER 2, NEW YORK • NEW YORK 17, NEW YORK • CHICAGO 1, ILLINOIS • ST. LOUIS 1, MISSOURI • MONTREAL 2, CANADA

CATALOG SECTION 76

Searchlight Signals

Type SA-1

CONTENTS

	Page
Dwarf, one-unit	7
Dwarf, two-unit	7
Heads	5
Housings	5&7
Ladder Foundations	19
Lamp Resistors	14
Marker Lights	13
Mast Assemblies	19
Roundels and Phankill Assemblies	15
Wire Entrance Material	21
Mechanisms, inoperative	11
Mechanisms, operating	9
General Information	2
How to Order	3

Parts lists are available on request

GENERAL RAILWAY SIGNAL COMPANY

ROCHESTER, NEW YORK

Printed in U. S. A.

A-2069

January 1963

Searchlight Signals

GENERAL INFORMATION

To give you the simplest possible ordering procedure consistent with a wide choice of searchlight signal arrangements, the mast-mounted signals are cataloged as two major assemblies (1) signal heads: complete with your choice of operating mechanism, lamp resistor, lamp bulb, and wire entrance coupling as you specify, and (2) mast assemblies: complete with pinnacle, base, ladder, and platform assembly as required. As furnished, all signals have lenses for tangent track only.

Dwarf signals can be ordered complete, ready to install, and include choice, as you specify, of lamp resistor, lamp, and wire entrance coupling.

Optional equipment is listed for separate ordering: inoperative mechanisms, marker lights, and special optical equipment.

The mechanism has a rotary movement which moves a spectacle with three color discs. The polarity of the control circuit determines whether a yellow or a green color disc is positioned to color the light beam. When the control circuit is not energized, the red color disc is positioned, by gravity, to color the beam.

All operating mechanisms have 250 ohms resistance and are designed for operation on systems with nominal d-c. operating voltages from 8 to 12 volts. Mechanisms have two dependent front-back contacts. Lamps are precision filament, single contact, bayonet base. Lamps with S-11 bulb shape and 1/64" precision are recommended.

The Type SA-1 mechanism is wholly interchangeable with the Type SA, providing, of course, the optical system is an equivalent.

For more details, see Handbook 29 on operation and installation and Pamphlet 809 on optical systems.

HOW TO ORDER

To order a mast-mounted signal, select signal head assembly from page 5 and mast assembly from pages 16 to 17. Dwarf signals are listed as complete units on page 7.

Your choices of lamp resistor, lamp bulb, and wire entrance coupling are included with each signal but must be specified separately.

Order following items separately, as needed:

1 - Spredlite or deflecting roundels and Phankill assemblies, page 15.
2 - Wire entrance material, page 20, (coupling Ref. 1 or 2 is included with high signals; Ref. 5 or 6 with dwarf signals).
3 - Marker lights, page 13.
4 - Instrument cases, Catalog Section 5.
5 - Foundation bolts, Catalog Section 3.

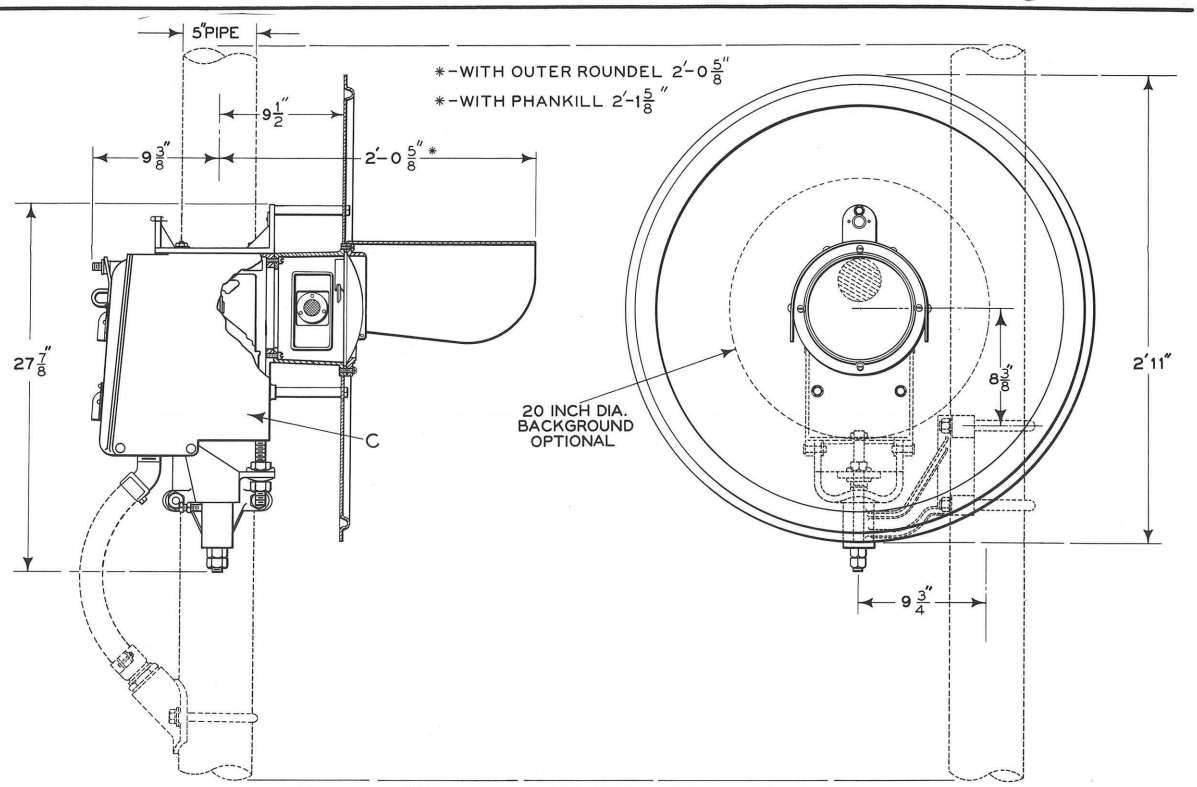

A - Type SA-1 searchlight signal head assembly with 8-3/8 inch dia. COMPOUND LENS.

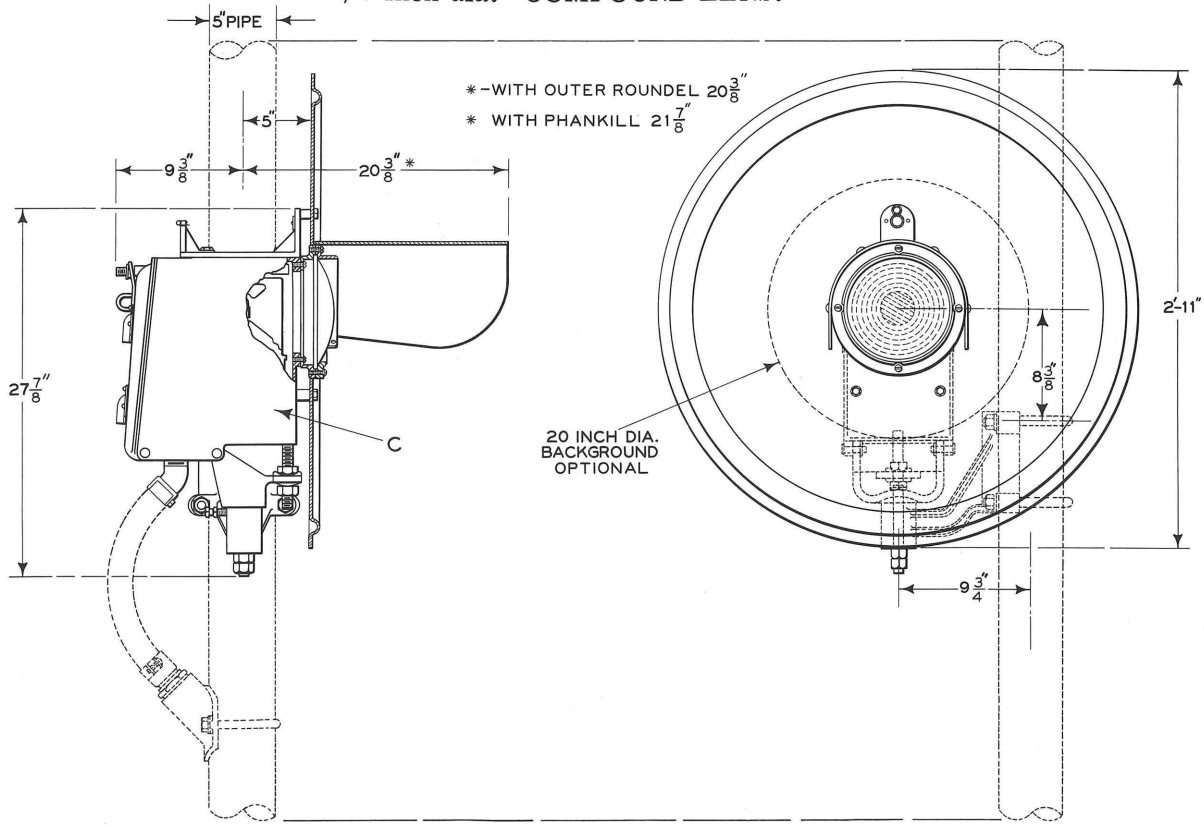

B - Type SA-1 searchlight signal head assembly with 8-3/8 inch dia. STEPPED LENS.

Type SA-1 signal heads.

TYPE SA-1 SIGNAL HEAD COMPLETE

FOR OPERATION ON SYSTEMS WITH NOMINAL D-C. OPERATING VOLTAGES FROM 8 TO 12 VOLTS.

The following are not included with the Type SA-1 Signal Head Complete and must be ordered separately:

1. Mast assemblies, page 19.
2. Wire entrance material, page 20 (exclusive of coupling, Ref. 1 or 2, page 20, which is included on signal housing).
3. Spredlite, deflecting roundels, and Phankill assemblies, if needed, page 15. As furnished, all signals have lenses for tangent track only.

To order, specify "SA-1 Signal" and give catalog number. Each signal Head Complete includes a Type SA-1 signal operating mechanism with housing, hood, 8-3/8" outer lens, background, ventilators, and bracket for mounting on a five-inch mast. Housing includes your choice of wire entrance couplings 1 or 2, page 20. Specify choice by catalog number. Mechanism includes your choices of lamp bulb, see Catalog Section 46, and lamp resistor, page 14. Lamps with S-11 bulb shape and 1/64" precision are recommended. Specify choices by catalog number.

REF.	LENS SYSTEM	TYPE OF WIRE CONNECTION ON MECHANISM	CATALOG NUMBER	
			WITH 20" DIAMETER BACKGROUND	WITH 2'-11" DIAMETER BACKGROUND
A	Compound	Plug Coupler	A76-102	A76-114
B	Stepped	" "	A76-106	A76-118
B1	* Stepped	" "	A76-110	A76-122

SIGNAL HOUSING-LESS MECHANISM

To order, specify "Signal Housing" and give catalog number. Each housing includes hood, 8-3/8" outer lens, background, ventilators, and bracket for mounting on a five-inch mast. Housing also includes your choice of wire entrance couplings 1 or 2, page 20. Specify choice by catalog number.

REF.	LENS SYSTEM	CATALOG NUMBER	
		WITH 20" DIAMETER BACKGROUND	WITH 2'-11" DIAMETER BACKGROUND
C	Compound	A76-130	A76-136
C1	Stepped	A76-132	A76-138
C2	*Stepped	A76-134	A76-140

* FOR USE WITH PHANKILL ASSEMBLY, STEPPED LENS FURNISHED WITH CLEAR CENTER. ORDER PHANKILL SEPARATELY FROM PAGE 15.

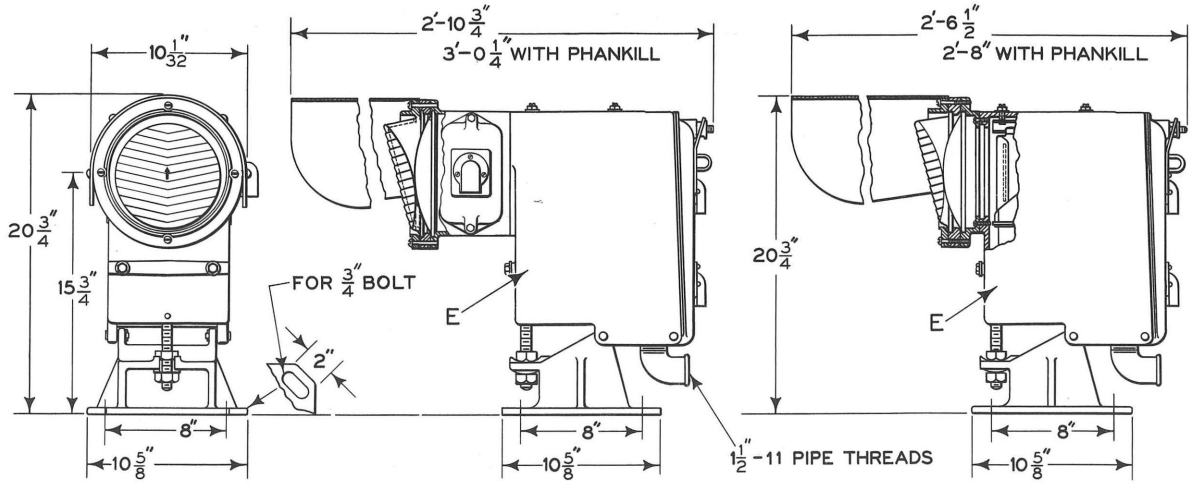

A - Type SA-1 searchlight dwarf signal with 8-3/8 inch dia. COMPOUND LENS.

B - Type SA-1 searchlight dwarf signal with 8-3/8 inch dia. STEPPED LENS.

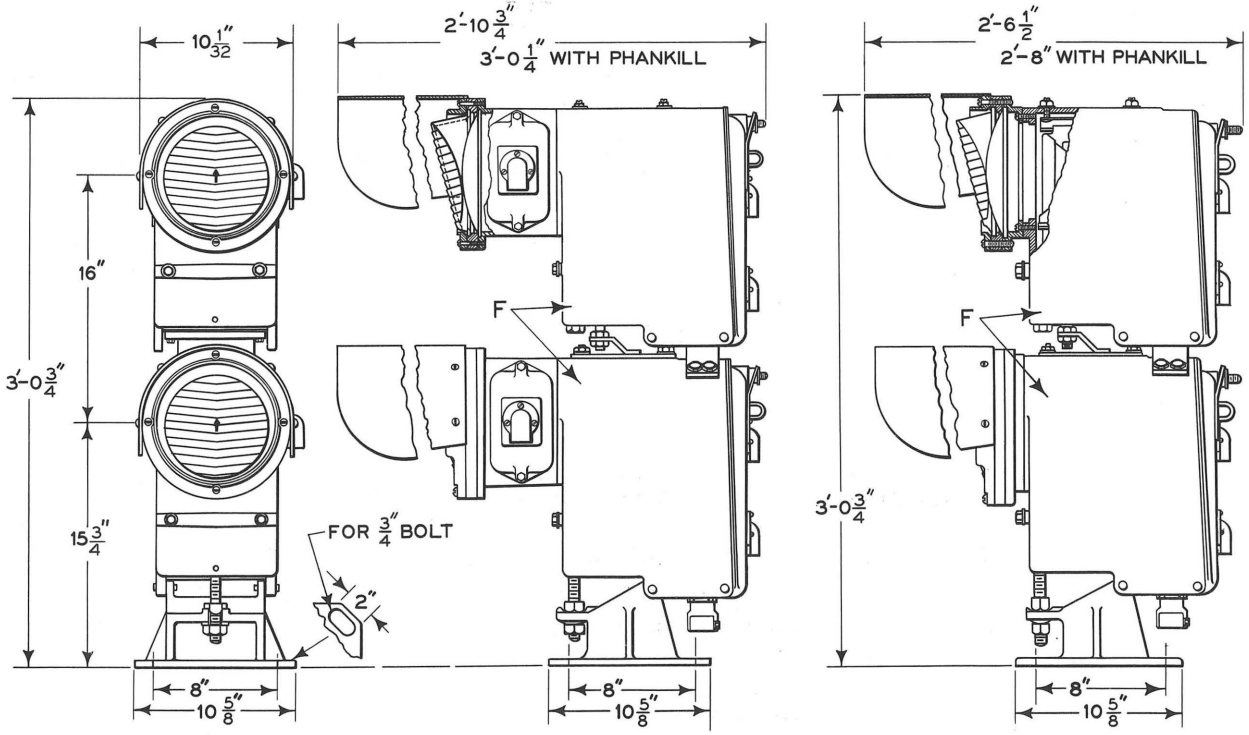

C - Two unit Type SA-1 searchlight dwarf signal with 8-3/8 inch dia. COMPOUND LENS.

D - Two-unit Type SA-1 searchlight dwarf signal with 8-3/8 inch dia. STEPPED LENS.

Type SA-1 dwarf signals.

TYPE SA-1 DWARF SIGNAL COMPLETE
One-Unit and Two-Unit

FOR OPERATION ON SYSTEMS WITH NOMINAL D-C. OPERATING VOLTAGES FROM 8 TO 12 VOLTS.

The Type SA-1 Dwarf Signal Complete includes that part of the wire entrance assembly which attaches to the signal housing. Remainder of wire entrance material must be ordered separately from page 21. An opening is provided, on two-unit signals, to run wires from lower to upper unit. Phankill units are not included with signals and must be ordered separately, see page 15, Ref. C.

To order, specify "SA-1 Signal" and give catalog number. The dwarf signals complete include Type SA-1 signal operating mechanisms with housings, hoods, 8-3/8" V-inclined 10° upward deflecting roundels, ventilators, and base as shown. Each signal complete includes your choice of one wire entrance couplings 5 or 6, page 20. Specify choice by catalog number. Mechanisms include your choice of lamp bulb, see Catalog Section 46, and lamp resistor, page 14. Lamps with S-11 bulb shape and 1/64" precision are recommended. Specify choices by catalog number.

REF.	NUMBER OF UNITS	LENS SYSTEM	TYPE OF WIRE CONNECTION ON MECHANISM	CATALOG NUMBER
A	One	Compound	Plug Coupler	A76-201
B	"	Stepped	" "	A76-206
C	Two	Compound	" "	A76-211
D	"	Stepped	" "	A76-216

DWARF SIGNAL HOUSING-LESS MECHANISM

To order, specify "Signal Housing" and give catalog number. Housings include hoods, 8-3/8" V-inclined 10° upward deflecting roundels, ventilators, base as shown, and your choice of one wire entrance couplings 5 or 6, page 20. Specify choice by catalog number.

REF.	NUMBER OF UNITS	LENS SYSTEM	CATALOG NUMBER
E	One	Compound	A76-220
E1	"	Stepped	A76-221
F	Two	Compound	A76-225
F1	"	Stepped	A76-226

TYPE SA-1 SIGNAL OPERATING MECHANISM

See ordering information on page 9.

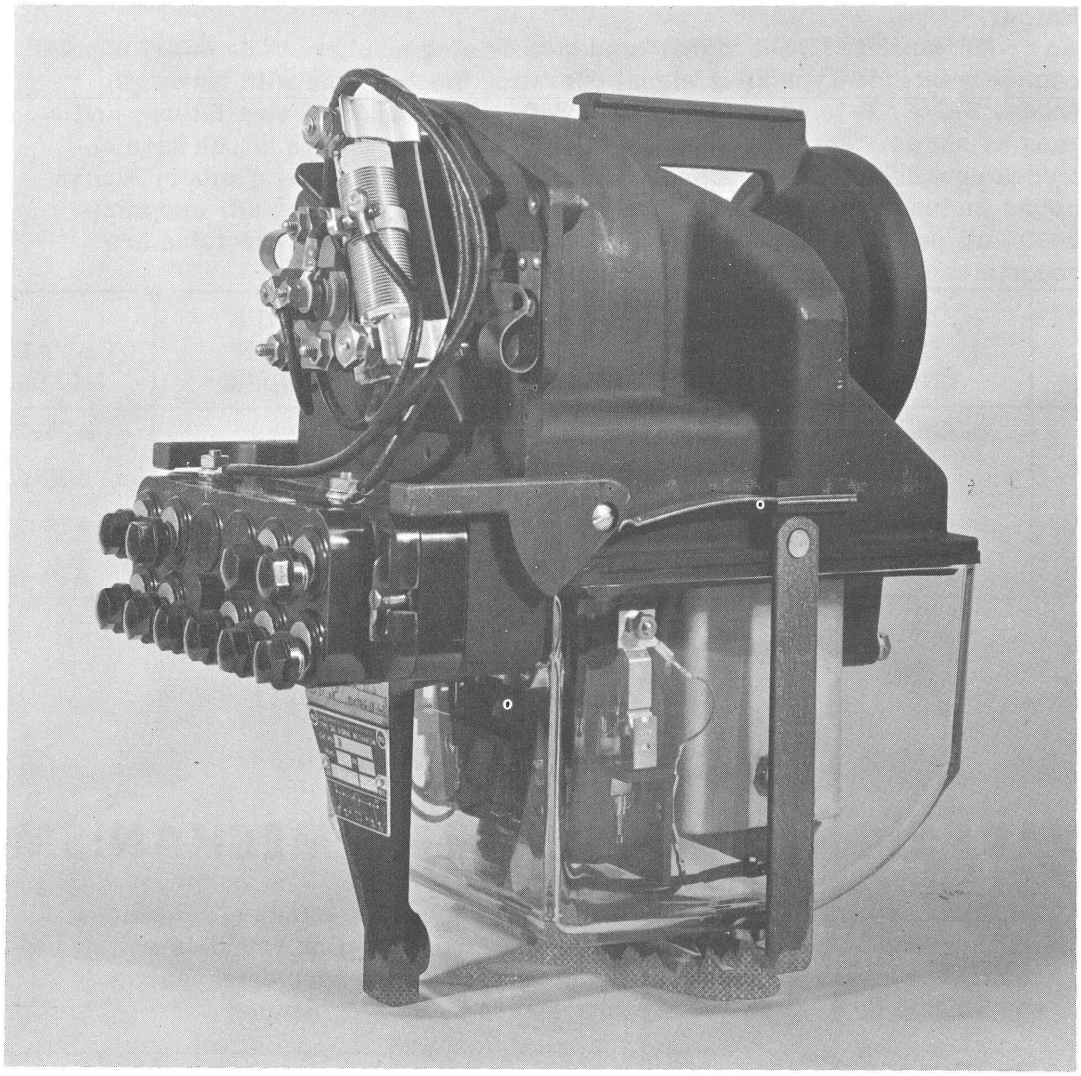

Type SA-1 searchlight signal operating mechanism.

TYPE SA-1 SIGNAL OPERATING MECHANISM

FOR OPERATION ON SYSTEMS WITH NOMINAL D-C. OPERATING VOLTAGES FROM 8 TO 12 VOLTS.

The Type SA-1 mechanism is wholly interchangeable with the Type SA, providing, of course, the optical system is an equivalent.
To order, specify "SA-1 Mechanism" and give catalog number. Each mechanism includes your choices of lamp bulb, see Catalog Section 46, and lamp resistor, page 14. Lamps with S-11 bulb shape and 1/64" precision are recommended. Specify choices by catalog number. Mechanisms have 250 ohms resistance and two dependent front-back contacts. See also general information on page 2.

LENS SYSTEM	TYPE OF WIRE CONNECTION ON MECHANISM	CATALOG NUMBER
Compound	Plug Coupler	A76-154
Stepped	Plug Coupler	A76-157

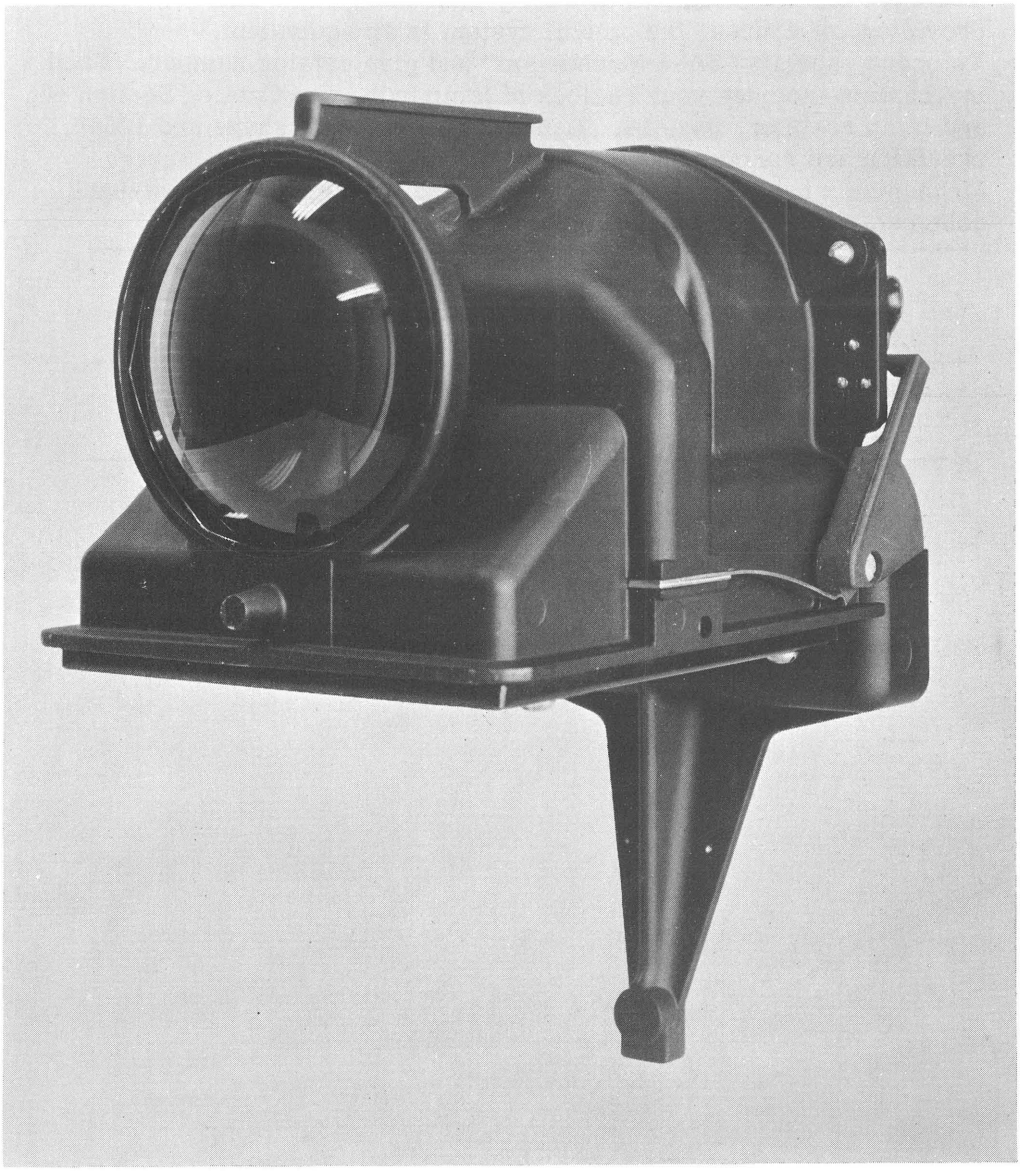

Inoperative Mechanism, for use in searchlight signal housing when only one color is to be displayed.

INOPERATIVE MECHANISM FOR SEARCHLIGHT SIGNAL

NOTE: This inoperative mechanism is for use in a two-unit dwarf signal, where only one color is needed in one unit. Also, it is for use in a high signal which might, at some future time, be equipped with an operative mechanism.

To order, specify "Inoperative Mechanism" and give catalog number. Each inoperative mechanism includes your choices of lamp bulb, Catalog Section 46, and lamp resistor, page 14. Lamps with S-11 bulb shape and 1/64" precision are recommended. Specify choices by catalog number. This mechanism fits same housing as Type SA-1 operating mechanism. Standard A. A. R. terminal posts are furnished for wire connections.

LENS SYSTEM	ASPECT	CATALOG NUMBER
Compound	Red	A76-490
Stepped	"	A76-492

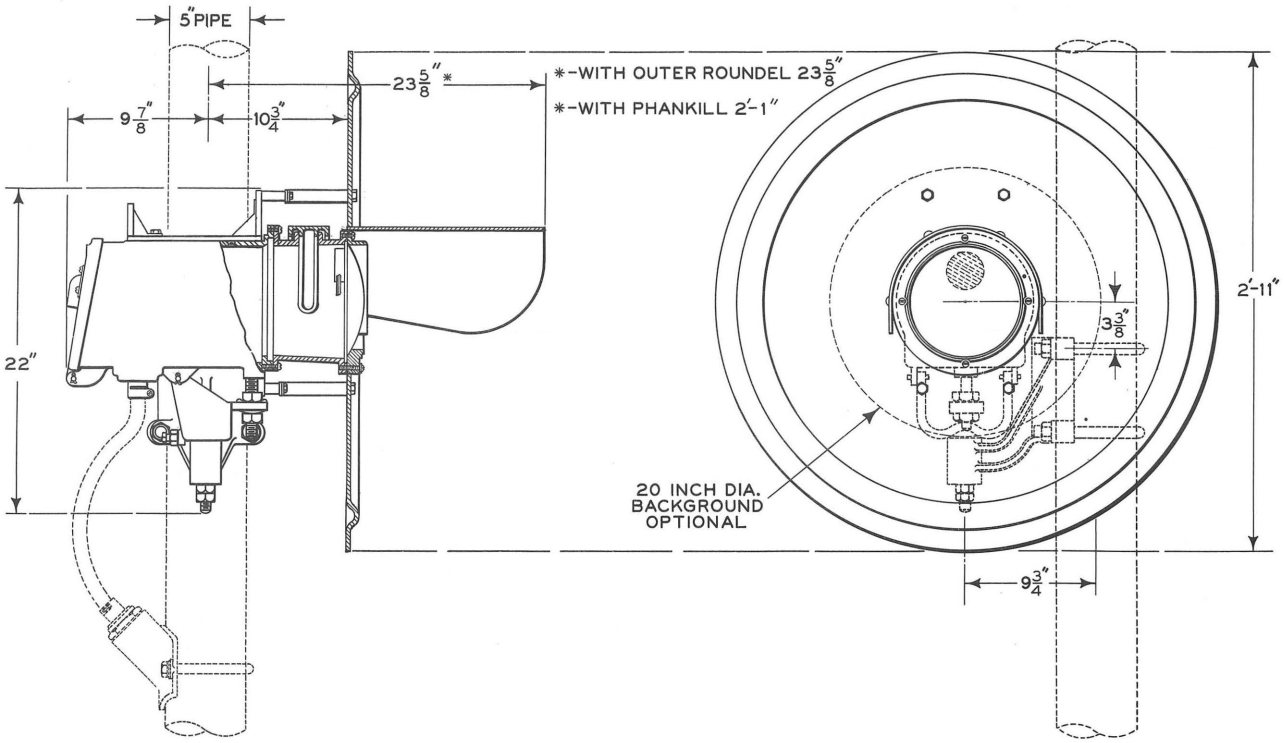

A - Searchlight type marker light with 8-3/8 inch dia. COMPOUND LENS.

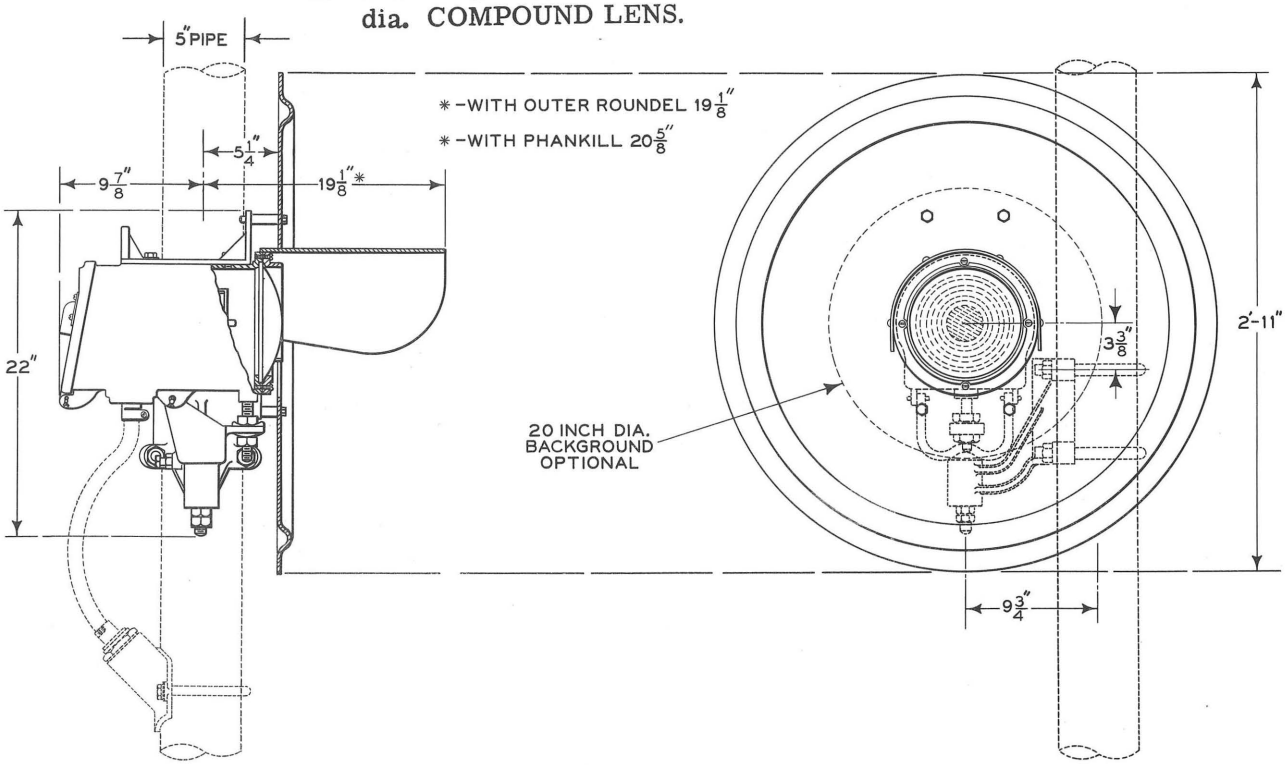

B - Searchlight type marker light with 8-3/8 inch dia. STEPPED LENS.

Marker lights, searchlight type.

MARKER LIGHTS, SEARCHLIGHT TYPE

The marker light provides an aspect of one color only. Optical system matches optical system of operating Type SA-1 signals with similar diameter lens arrangements - stepped or compound. The backgrounds and hoods are the same sizes as for high signals. Standard A. A. R. terminal posts are furnished for wire connections.

The following are not included with the marker light and must be ordered separately:

1. Wire entrance material, page 20 (exclusive of coupling, Ref. 3 or 4, page 20, which is included on marker lights).
2. Spredlite, deflecting roundels, and Phankill assemblies, if needed, page 15. As furnished, all marker lights have lenses for tangent track only.

To order, specify "Marker Light" and give catalog number. Each marker light complete includes a housing, hood, 8-3/8" outer lens, background, ventilators and bracket for mounting on a five-inch mast. Housing includes your choice of wire entrance couplings Ref. 3 or 4, page 20. Specify choice by catalog number. Marker light includes your choice of lamp bulb, see Catalog Section 46, and lamp resistor, page 14. Lamps with S-11 bulb shape and 1/64" precision are recommended. Specify choices by catalog number.

REF.	LENS SYSTEM	ASPECT	CATALOG NUMBER	
			WITH 20" DIAMETER BACKGROUND	WITH 2'-11" DIAMETER BACKGROUND
A	Compound	Red	A76-400	A76-410
B	Stepped	"	A76-402	A76-412
B1	*Stepped	"	A76-404	A76-414

* FOR USE WITH PHANKILL ASSEMBLY, STEPPED LENS FURNISHED WITH CLEAR CENTER. ORDER PHANKILL SEPARATELY FROM PAGE 15.

ADJUSTABLE LAMP RESISTORS

Each Type SA-1 signal mechanism - operating or inoperative - and each searchlight type marker light require a lamp resistor. A resistor is included with each mechanism and marker light, but, since the resistor must be matched to the lamp you plan to use, the resistor must be specified separately by catalog number. These are cartridge type units which plug into clips provided on the signal mechanism and in the marker light.

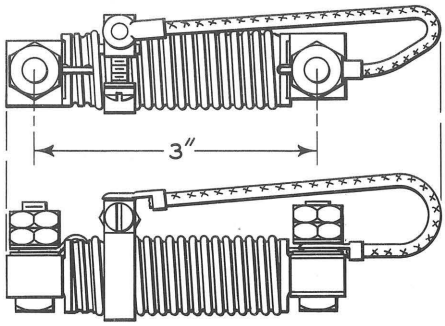

To order, specify "Lamp Resistor" and give catalog number

RESISTANCE, OHMS	MAXIMUM CURRENT	CATALOG NUMBER
1	2.5 amps.	A76-330
2	1.75 amps.	A76-331
5	1.0 amp.	A76-332

ROUNDEL AND PHANKILL ASSEMBLIES

Signal heads and marker lights are furnished with 8-3/8-inch lenses for tangent track only. Order assemblies below as required to adapt signal heads to specific conditions. All roundels and Phankill assemblies come complete with necessary material for installing, except sealing compound. For this we recommend Vulcatex, gun grade for metal-to-metal surfaces and knife grade for glassware.

Phankill assemblies for high signals and marker lights have built-in 25° close-up roundel. On compound lens high signals, remove existing close-up roundel before installing Phankill. If you plan to use Phankill with stepped lens signal, order signal head with clear center lens, specially arranged for use with Phankill, see page 5.
For marker light arranged for Phankill, see page 13. The Phankill blocks external light from the outer surfaces of the signal glassware, thus preventing dilution of the beam. (The Phankill is described fully in GRS publication D50.0101.)

Roundel assemblies fit both stepped and compound lens signals and marker lights.

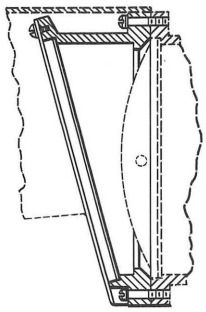

A - Roundel assembly for high signals and marker lights.

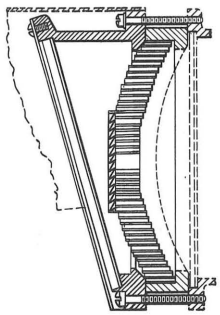

B - Roundel assembly with Phankill for high signals and marker lights.

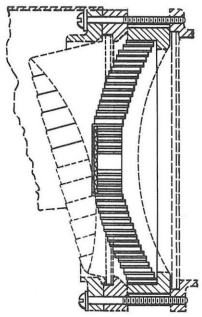

C - Phankill assembly for dwarf signals.

Order by catalog number and name shown in bold type

REF.	NAME	CATALOG NUMBER
A	ROUNDEL ASSEMBLY, inclined 20-degree deflecting roundel, complete with all parts to install on compound- or stepped-lens high signal or searchlight type marker light	A76-350
A1	ROUNDEL ASSEMBLY, same as above, except with 30-degree Spredlite roundel	A76-353
B	PHANKILL ASSEMBLY, complete with all parts to install on compound- or stepped-lens high signal or searchlight type marker light. The inclined roundel included has no deflecting or Spredlite characteristics	A76-360
B1	PHANKILL ASSEMBLY, same as above, except with 20-degree deflecting roundel	A76-362
B2	PHANKILL ASSEMBLY, same as Ref. B, except with 30-degree Spredlite roundel	A76-363
C	PHANKILL ASSEMBLY, includes ring and necessary screws and washers for attaching to compound- or stepped-lens dwarf signals	A76-370

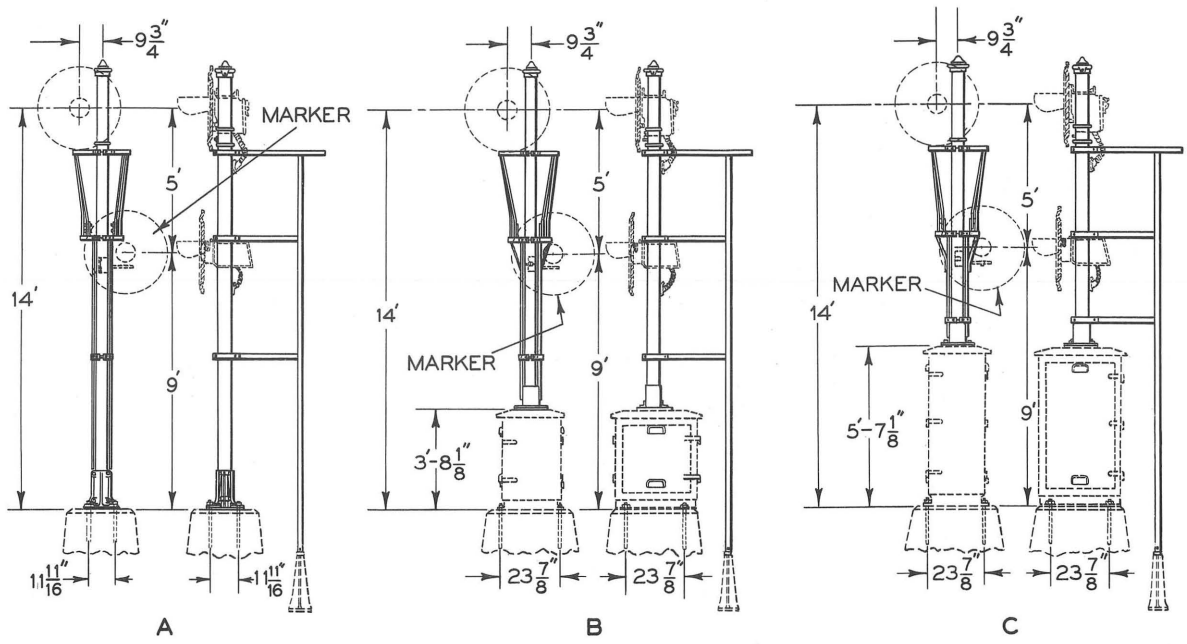

(All mast heights are approximate)

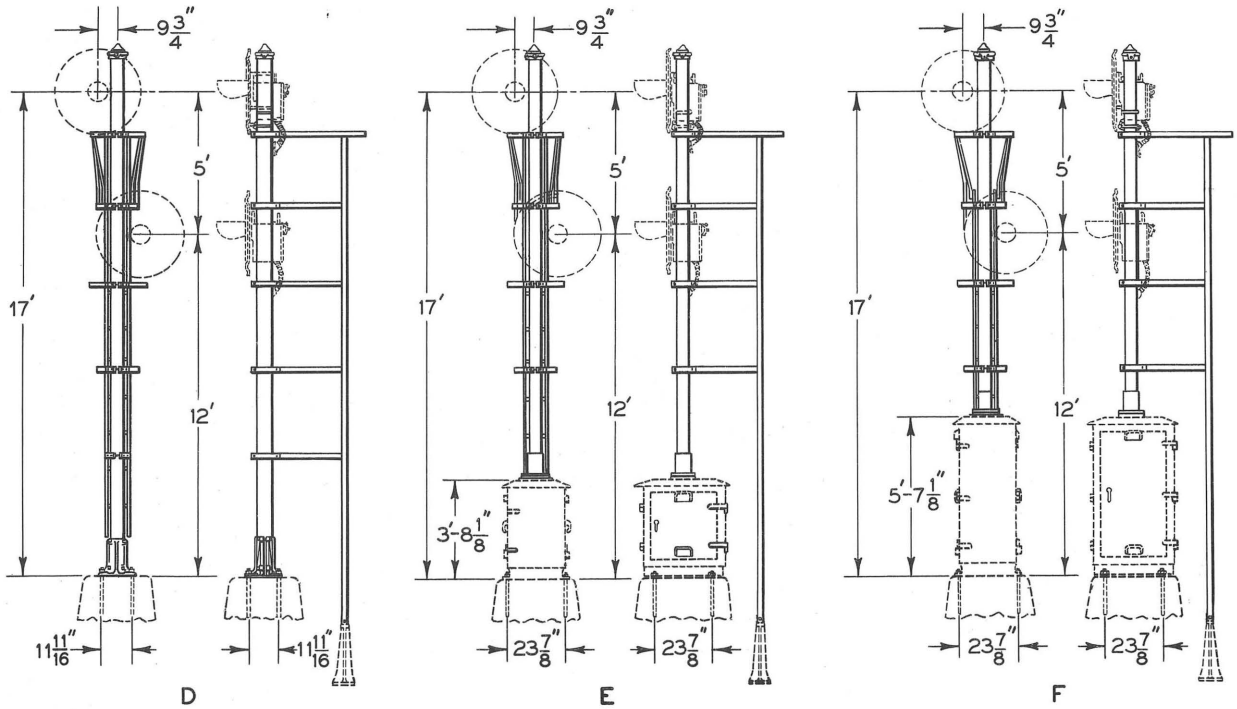

Signal mast assemblies.

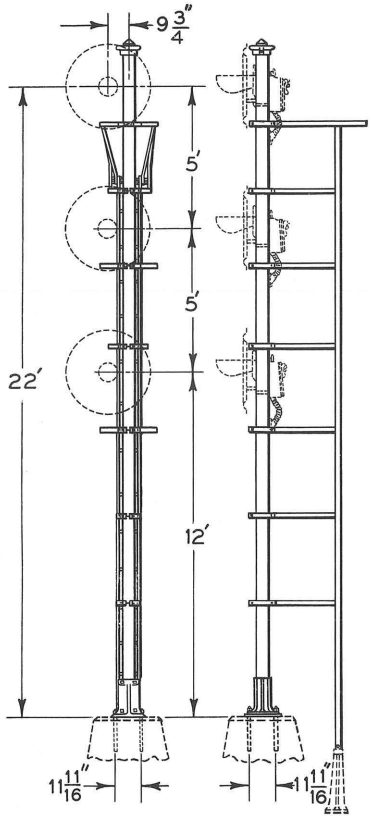

G

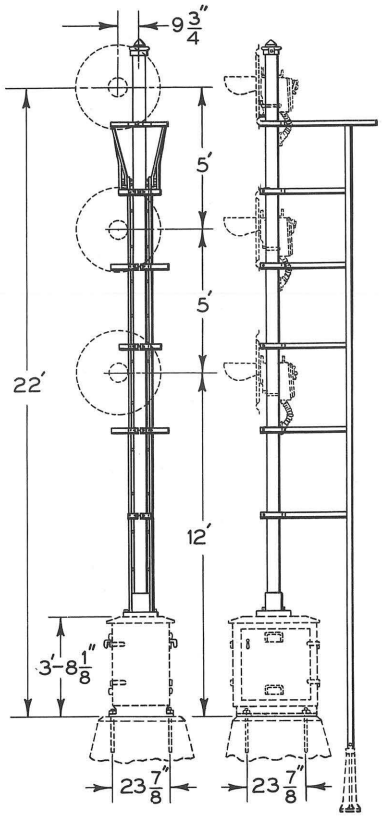

H

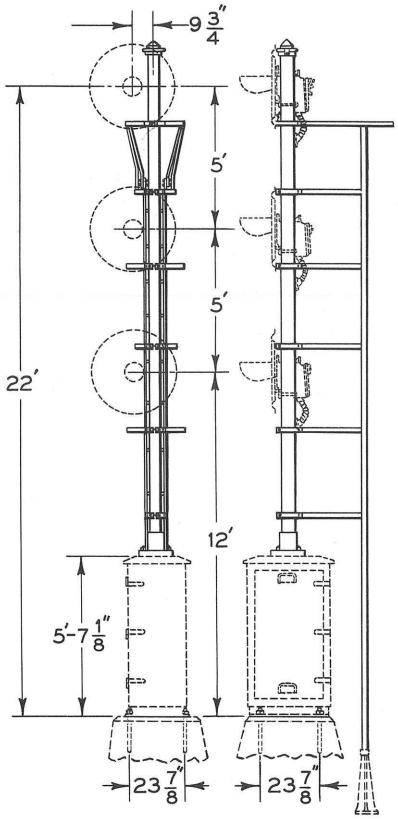

J

Signal mast assemblies.

(All mast heights are approximate)

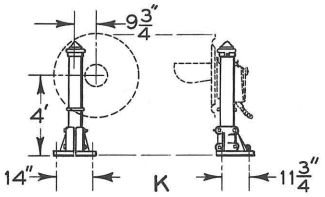

K

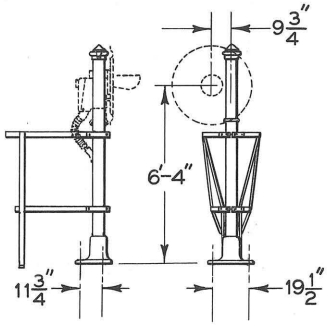

M

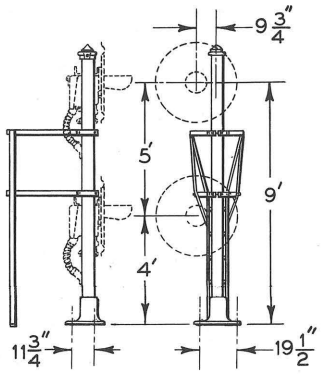

N

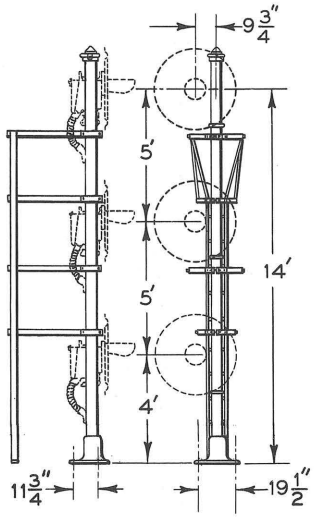

P

Signal mast for bracket post or bridge.

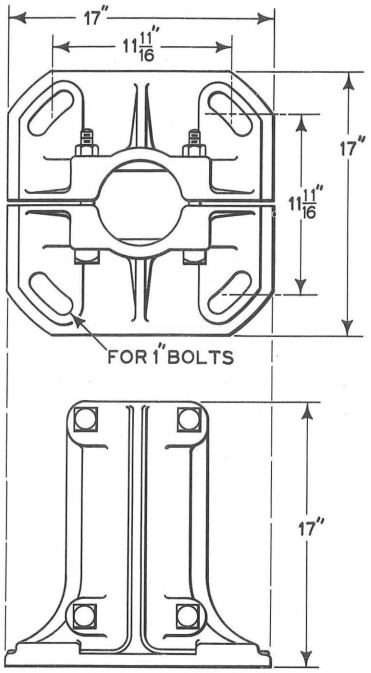

SPLIT BASE

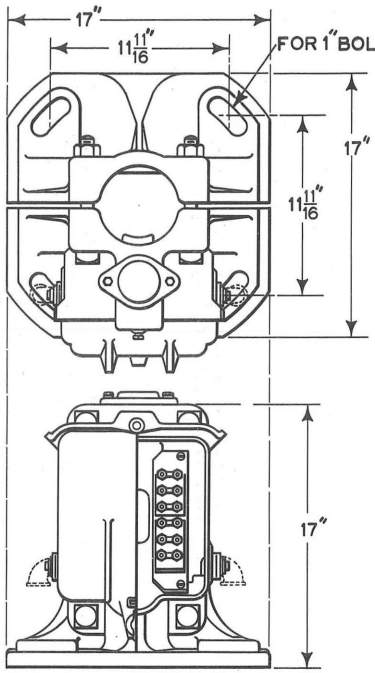

SPLIT JUNCTION BOX BASE

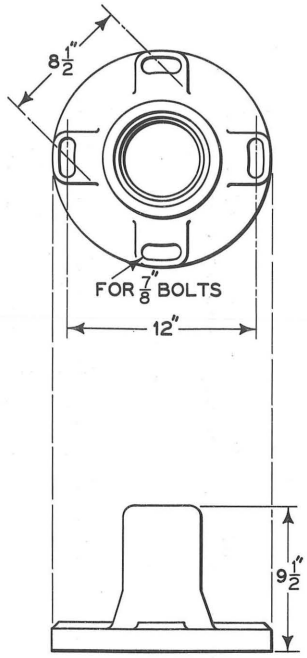

SOLID BASE
FOR CASE MOUNTING

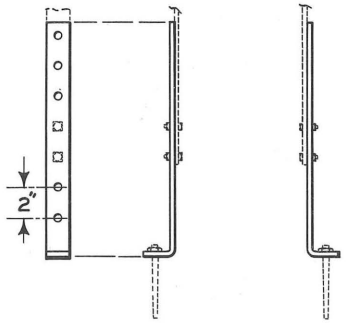

R-LADDER SUPPORTS

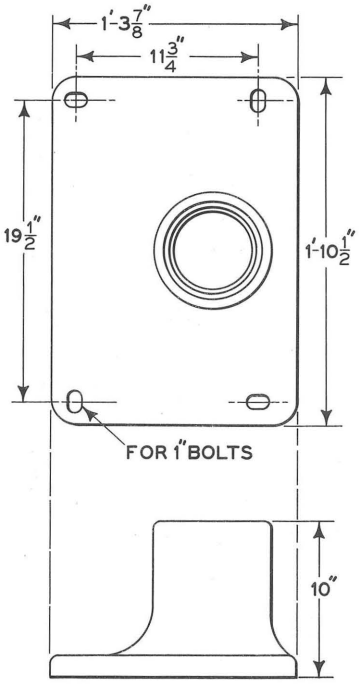

SOLID-OFFSET BASE

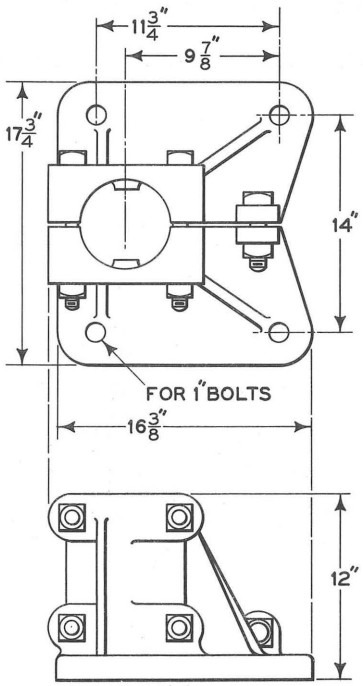

SPLIT-OFFSET BASE

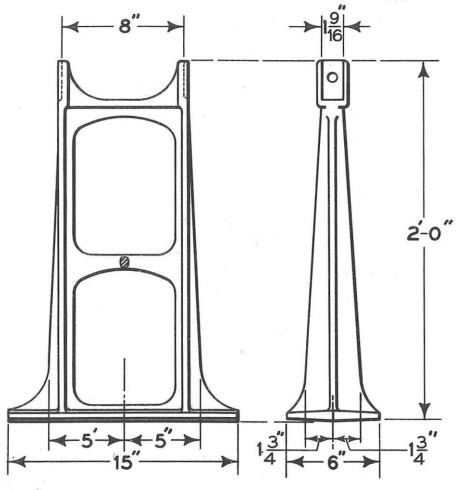

S-LADDER FOUNDATION

Types of bases supplied with signal mast assemblies.

MAST ASSEMBLIES

Masts listed below and shown on pages 16 and 17 are five-inch inside diameter. They are drilled for the signal arrangements shown and come complete with pinnacle, base, ladder and platform assembly. (For actual drilling, see page 20.) Bridge signal mast, Ref. K does not have ladder and platform. For foundation bolts, see Catalog Section 3.

To order, specify "Mast Assembly" and give catalog number

REF.	DRILLED FOR		TYPE OF BASE (See Page 18)	CATALOG NUMBER
	SIGNAL HEADS	MARKER LIGHT		
A	one	--	Split	A76-300
A1	"	--	Split Junction Box	A76-301
A2	"	one	Split	A76-302
A3	"	"	Split Junction Box	A76-303
*B	"	--	Solid	A76-304
*B1	"	one	"	A76-305
*C	"	--	"	A76-306
*C1	"	one	"	A76-307
D	two	--	Split	A76-308
D1	"	--	Split Junction Box	A76-309
*E	"	--	Solid	A76-310
*F	"	--	"	A76-311
G	three	--	Split	A76-312
G1	"	--	Split Junction Box	A76-313
*H	"	--	Solid	A76-314
*J	"	--	"	A76-315
K	one	--	Split Offset	A76-319
M	"	--	Solid Offset	A76-316
N	two	--	"	A76-317
P	three	--	"	A76-318

* DOES NOT INCLUDE INSTRUMENT CASE. SEE CATALOG SECTION 5, AND ORDER SEPARATELY.

LADDER FOUNDATIONS

Order by catalog number and name shown in bold type

REF.	NAME	CATALOG NUMBER
R	**SUPPORT**, adjustable, for use when ladder is to be fastened directly to flat surface, includes bolts and nuts for attaching to ladder	A76-325
S	**FOUNDATION**, for ladder, includes bolts and nuts	A76-327

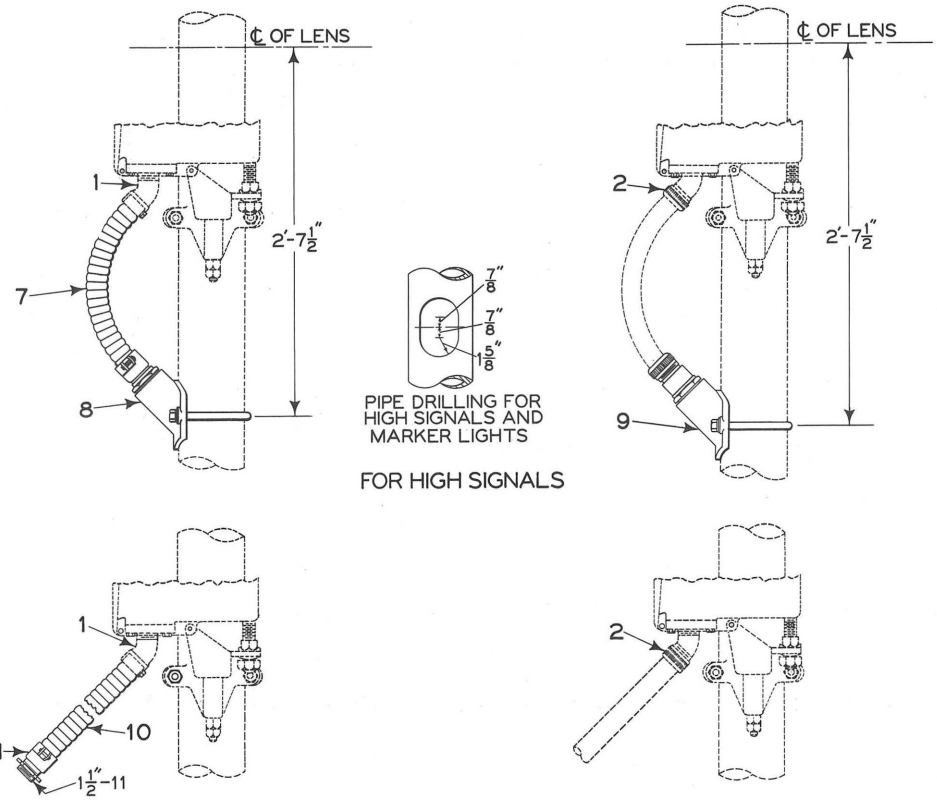

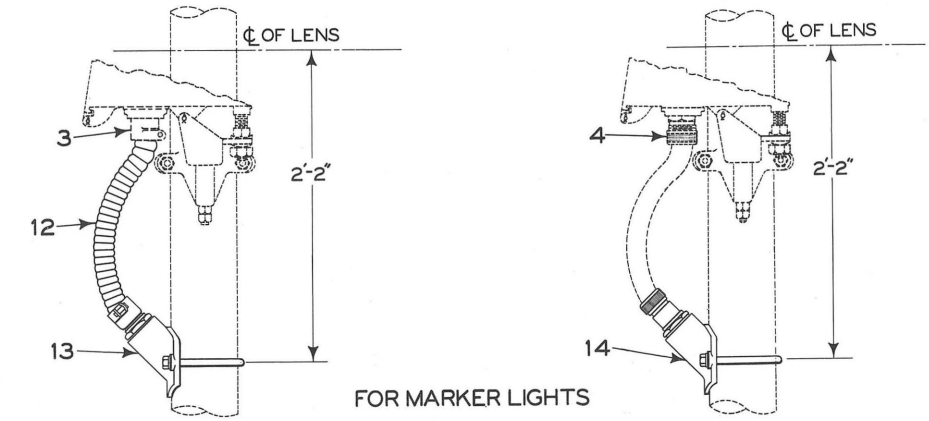

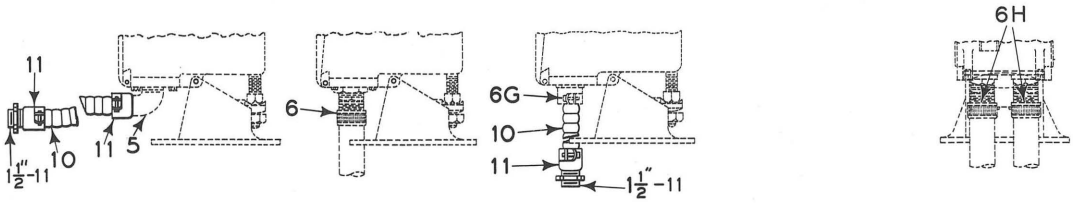

Wire entrance material.

WIRE ENTRANCE MATERIAL

The illustrations on opposite page represent our recommended standard arrangements for bringing wiring via flexible conduit or cable into signal units and marker lights.

Order by catalog number and name shown in bold type

REF.	NAME	CATALOG NUMBER
	NOTE: THE FOLLOWING ITEMS ARE FURNISHED WITH SIGNAL HEADS COMPLETE, HOUSINGS, AND MARKER LIGHTS BUT ARE SHOWN HERE FOR YOUR SELECTION OF THE DESIRED FITTING FOR USING EITHER FLEXIBLE CONDUIT OR CABLE. REFS. 1 THROUGH 6H INCLUDE PARTS FOR ATTACHING TO SIGNAL HOUSING.	
1	COUPLING, 45 degrees, for 1-1/2" flexible conduit	A76-526
2	COUPLING, 45 degree, for 5/8" to 3/4" dia. cable	A76-527
2A	COUPLING, 45 degree, for 3/4" to 7/8" dia. cable	A76-528
2B	COUPLING, 45 degree, for 7/8" to 1.0" dia. cable	A76-536
2C	COUPLING, 45 degree, for 1.0" to 1-3/16" dia. cable.	A76-537
2D	COUPLING, 45 degree, for 1-3/16" to 1-3/8" dia. cable	A76-538
2E	COUPLING, 45 degree, for 1-3/8" to 1-5/8" dia. cable	A76-539
2F	COUPLING, 45 degree, for 1-5/8" to 1-7/8" dia. cable.	A76-542
3	COUPLING, straight, for 3/4" flexible conduit.	A76-543
4	COUPLING, straight, for 3/8" to 1/2" dia. cable	A76-544
4A	COUPLING, straight, for 1/2" to 5/8" dia. cable	A76-552
5	ELBOW, 90 degree.	A76-553
6	COUPLING, straight, for 5/8" to 3/4" dia. cable	A76-554
6A	COUPLING, straight, for 3/4" to 7/8" dia. cable	A76-556
6B	COUPLING, straight, for 7/8" to 1.0" dia. cable	A76-557
6C	COUPLING, straight, for 1.0" to 1-3/16" dia. cable.	A76-558
6D	COUPLING, straight, for 1-3/16" to 1-3/8" dia. cable	A76-559
6E	COUPLING, straight, for 1-3/8" to 1-5/8" dia. cable	A76-562
6F	COUPLING, straight, for 1-5/8" to 1-7/8" dia. cable	A76-563
6G	COUPLING, straight, for 1-1/2" flexible conduit.	A76-564
6H	COUPLING, pair, straight, for 1-3/8" to 1-5/8" dia. cable, for two-unit dwarf signal only	**A76-567**

(Continued on following page)

WIRE ENTRANCE MATERIAL

Order by catalog number and name shown in bold type

REF.	NAME	CATALOG NUMBER
	NOTE: THE FOLLOWING ITEMS ARE NOT FURNISHED WITH SIGNALS AND HOUSINGS AND SHOULD BE ORDERED SEPARATELY AS NEEDED.	
7	CONDUIT, 1-1/2" flexible, length 2 ft	A85-868
8	COUPLING, complete with "U" bolt, reducer and gasket for 1-1/2" flexible conduit	A76-568
9	COUPLING, complete with "U" bolt, reducer and gasket for 5/8" to 3/4" dia. cable	A76-529
9A	COUPLING, complete with "U" bolt, reducer and gasket for 3/4" to 7/8" dia. cable	A76-530
9B	COUPLING, complete with "U" bolt, reducer and gasket for 7/8" to 1.0" dia. cable	A76-531
9C	COUPLING, complete with "U" bolt, reducer and gasket for 1.0" to 1-3/16" dia. cable	A76-532
9D	COUPLING, complete with "U" bolt, reducer and gasket for 1-3/16" to 1-3/8" dia. cable	A76-533
9E	COUPLING, complete with "U" bolt, and gasket for 1-3/8" to 1-5/8" dia. cable	A76-534
9F	COUPLING, complete with "U" bolt, and gasket for 1-5/8" to 1-7/8" dia. cable	A76-535
10	CONDUIT, 1-1/2" flexible, length 4'	A85-868
11	COUPLING, for 1-1/2" flexible conduit, thread portion 1-1/2"-11 . .	A85-866
12	CONDUIT, 3/4" flexible, length 2'	A76-587
13	COUPLING, complete with "U" bolt, for 3/4" flexible conduit	A76-588
14	COUPLING, complete with "U" bolt, reducer and gasket, for 3/8" to 1/2" dia. cable	A76-589
14A	COUPLING, complete with "U" bolt, reducer and gasket, for 1/2" to 5/8" dia. cable	A76-590

CATALOG SECTION 81

Switch Circuit Controllers
Models 7J and 7K

CONTENTS

	Page
Model 7J	4
Model 7K	4
Centering Device	6
Operating Cranks	6
Wire Entrance Material	6
General Description	2
Ordering Information	2

GENERAL RAILWAY SIGNAL COMPANY

ROCHESTER, NEW YORK

Printed in U. S. A.

A1692

June 1964

Switch Circuit Controllers
Models 7J and 7K

GENERAL DESCRIPTION

Each Model 7J and 7K switch circuit controller consists of a rugged, weatherproof cast iron case housing four dependent, front-back articulated contacts. Through suitable mechanical linkage, the contacts are operated by the motion of external devices, such as switch points, derails, bridge locks, etc.

Each contact is operated by a separate, adjustable cam so that each contact opens or closes as desired at specific positions of the actuating device.

The controllers have pressure grease fittings, 14-24 terminal posts, and 1 1/2-inch diameter cam shafts.

In general, the controllers meet A. A. R. Specifications, they are similar in external dimensions, mounting centers, and wiring outlets. They use the same style cranks, centering device, and mechanical linkages to the actuating device. Chief differences are in the internal mechanical arrangements for transmitting crank movement into contact movement.

Model 7J

This model, Figure A, page 4, has a cam-and-roller action. The front contacts are forced closed by the cams and opened by spring action. The back contacts are spring closed and forced open by the cams.

Model 7K

This model, Figure B, page 4, has a push-pull action. The contacts are forced in both directions, both open and closed, by cam action.

ORDERING INFORMATION

On page 5, you may order a switch circuit controller complete with operating crank and wire entrance coupling. Various other accessories may be ordered separately from page 7. For connecting rods, jaws, point lugs, junction terminal boxes, etc., see Catalog Section 91.

Memoranda

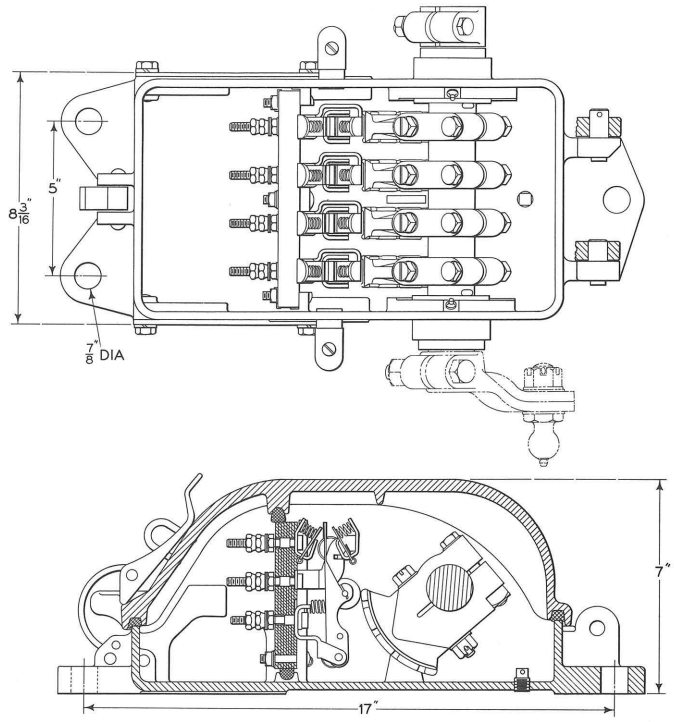

Figure A. Model 7J switch circuit controller (see description on page 2).

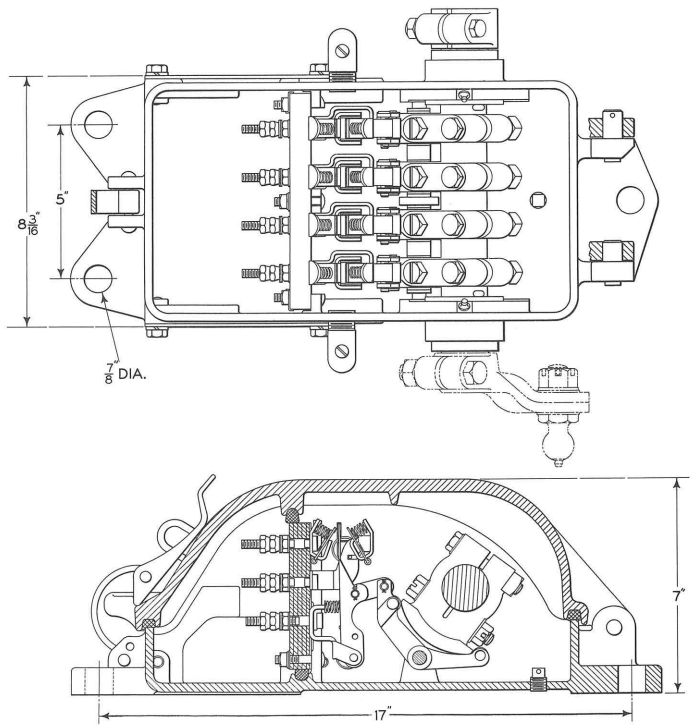

Figure B. Model 7K switch circuit controller (see description on page 2).

SWITCH CIRCUIT CONTROLLERS
MODELS 7J and 7K

To order, specify "Switch Circuit Controller", giving catalog number. Your choice of wire entrance coupling A or B and crank C or D, page 6 included with controller. Please specify choices by catalog numbers.

REF.	NAME	CATALOG NUMBER
A	Model 7J Switch Circuit Controller	A81-100
B	Model 7K Switch Circuit Controller	A81-105

Refer to page 6 for other accessories required. These must be ordered separately.

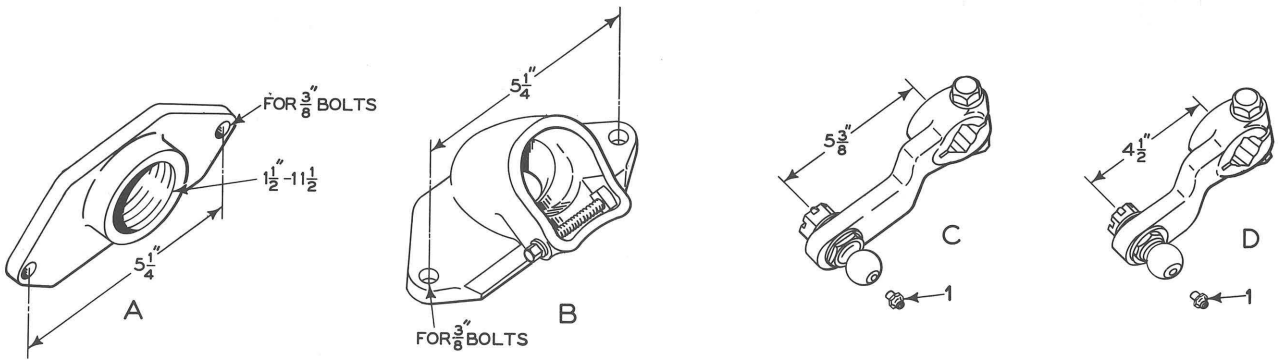

Controllers Complete are supplied with your choice of either A or B and C or D.

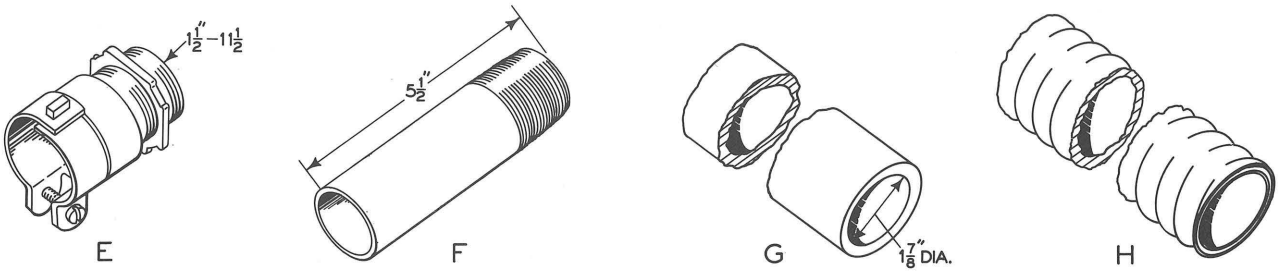

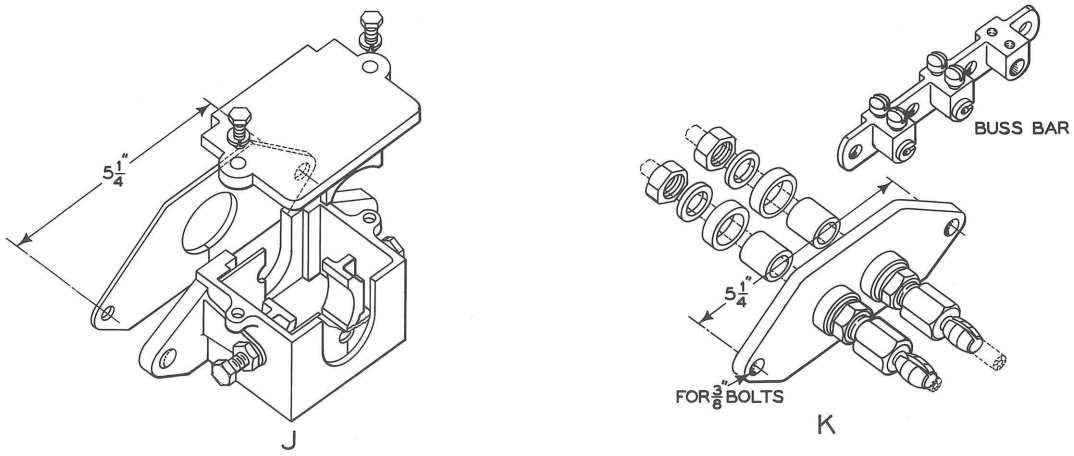

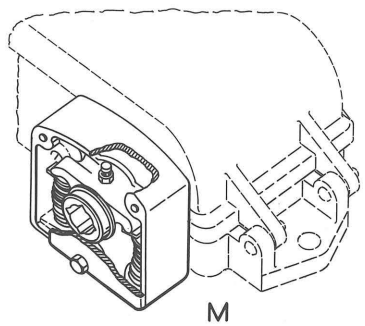

Accessories for switch circuit controllers.

ACCESSORIES FOR SWITCH CIRCUIT CONTROLLERS

Order by catalog number and name shown in bold type

REF.	NAME	CATALOG NUMBER
A	CAP, for wire outlet, with 1 1/2" - 11 1/2 std. pipe tapped hole . . .	A81-130
B	COUPLING, 45 degree, for 1 1/2" flexible conduit	A81-131
C	CRANK, with insulated ball pin, 1" offset, 5 3/8" centers. See table below	A81-135
D	CRANK, with insulated ball pin, 1" offset, 4 1/2" centers. See table below	A81-137
E	COUPLING, for 1 1/2" flexible conduit, thread portion 1 1/2"-11 1/2	A85-866
F	PIPE NIPPLE, 1 1/2"- 11 1/2 std. pipe threads, for 1 7/8" I. D. rubber conduit	A85-867
G	CONDUIT, 1 7/8" I. D. solid rubber, length 3'	A85-520
H	CONDUIT, 1 1/2" flexible, length 3'	A85-868
J	ENTRANCE SEAL, takes up to 1 1/2" dia. cable	A81-145
K	CAP, for terminating shunt wires, for two .243" dia. cables, two required, also includes one buss bar	A81-147
K1	CAP, for terminating shunt wires, for two .190" dia. cables, two required, also includes one buss bar	A81-149
M	CENTERING ATTACHMENT, for broken switch rod protection, includes gasket	A81-151
1	OILER, for cranks Refs. C and D	P81-140

Max. Throw of Cranks Refs. C and D

Crank Ref.	Centers of Crank	Used on Switch Circuit Controller, pages 4 & 5	*Max. Throw or Stroke
C	5 3/8"	Fig. A - Model 7J	6 1/2"
"	"	" B - Model 7K	7"
D	4 1/2"	Fig. A - Model 7J	5"
"	"	" B - Model 7K	5 7/8"

*Maximum permissible connecting rod movement.

Memoranda

File in Catalog
Section 85 following
page 24.

CHANGE NOTIFICATION SHEET

MODELS 5E, 5F, 5G AND 5H SWITCH MACHINES

Throw-Bar Bearings

One piece, renewable, box-style, throw-bar bearings, as shown, are now furnished on Models 5E, 5F, 5G, and 5H switch machines.

To replace former box-style, four-piece wear plates, proceed as follows:

1. Remove the throw-bar coupling, and the wear plates on both sides of the machine.
2. Slide the new bearings into place to contact the base frame on each side of the throw-bar. If the inside of either lug is away from the base frame, add a washer to fill the space.
3. Replace the throw-bar coupling and crank the machine until the throw-bar coupling is fully in toward the machine. There should be approximately 1/16-inch clearance between the throw-bar coupling and the throw-bar bearing. If there is not enough clearance, file down the throw-bar coupling as required.
4. Lubricate the throw-bar bearing on both sides with an all-temperature grease and connect the machine back into service.

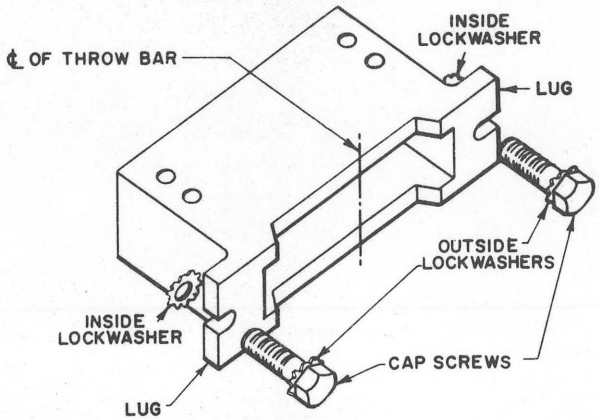

File in Catalog
Section 85 following
page 24.

CHANGE NOTIFICATION SHEET

MODELS 5E, 5F, 5G AND 5H SWITCH MACHINES

Throw-Bar Bearings

One piece, renewable, box-style, throw-bar bearings, as shown, are now furnished on Models 5E, 5F, 5G, and 5H switch machines.

To replace former box-style, four-piece wear plates, proceed as follows:

1. Remove the throw-bar coupling, and the wear plates on both sides of the machine.
2. Slide the new bearings into place to contact the base frame on each side of the throw-bar. If the inside of either lug is away from the base frame, add a washer to fill the space.
3. Replace the throw-bar coupling and crank the machine until the throw-bar coupling is fully in toward the machine. There should be approximately 1/16-inch clearance between the throw-bar coupling and the throw-bar bearing. If there is not enough clearance, file down the throw-bar coupling as required.
4. Lubricate the throw-bar bearing on both sides with an all-temperature grease and connect the machine back into service.

File in Catalog
Section 85 following
page 24.

CHANGE NOTIFICATION SHEET

MODELS 5G AND 5H SWITCH MACHINES

Modification in Biased-Neutral Controllers

Beginning with serial number B7500, all biased-neutral controllers supplied with Models 5G and 5H switch machines will be furnished with redesigned, extra-heavy-duty snub and front-back contactor contacts. A redesigned contact finger is also provided.

The redesigned contacts and contact fingers will be supplied on replacement orders for older type contacts and contact fingers now in service.

When replacing older type contacts, the redesigned contact finger must also be used. For contact openings, see Handbook 70.

Ordering references are as follows:

DWG. NUMBER	DESCRIPTION	QUANTITY REQUIRED
54541-12 Gr. 1	Contact Finger Complete	2
54541-13 Gr. 1	Contact Finger Complete	1
42799-32 Gr. 1	Front Contact Complete	3
42799-32 Gr. 2	Back Contact Complete	2
626-201	Shim	15

File in Catalog
Section 85 following
page 24.

CHANGE NOTIFICATION SHEET

MODELS 5G AND 5H SWITCH MACHINES

Modification in Biased-Neutral Controllers

Beginning with serial number B7500, all biased-neutral controllers supplied with Models 5G and 5H switch machines will be furnished with redesigned, extra-heavy-duty stud and front-back contactor contacts. A redesigned contact finger is also provided.

The redesigned contacts and contact fingers will be supplied on replacement orders for older type contacts and contact fingers now in service.

When replacing older type contacts, the redesigned contact finger must also be used. For contact openings, see Handbook 70.

Ordering references are as follows:

DWG. NUMBER	DESCRIPTION	QUANTITY REQUIRED
5454I-12 Gr. 1	Contact Finger Complete	2
5454I-13 Gr. 1	Contact Finger Complete	1
4279S-32 Gr. 1	Front Contact Complete	3
4279S-32 Gr. 2	Back Contact Complete	2
626-201	Shim	15

CATALOG SECTION 85

Electric Switch Machines
Models 5A, 5E , 5F , 5G and 5H
and
Electric Switchman®

CONTENTS

	Page
Model 5A Switch Machine	3
Model 5E Switch Machine	7
Model 5F Switch Machine	11
Model 5G Switch Machine	15
Model 5H Switch Machine	19
ELECTRIC SWITCHMAN	51
Lock Rod and Detector Rod Lugs	22
Telephone Jack	22
Wire Entrance Couplings and Conduit	22

Parts lists are available on request

GENERAL RAILWAY SIGNAL COMPANY

ROCHESTER, NEW YORK

Printed in U. S. A.

February 1961

A 1628

Electric Switch Machines
Models 5A, 5E , 5F , 5G and 5H

GENERAL DESCRIPTION

These GRS switch machines meet all operating requirements for interlocked switches. They can be used at single switches, double-slip switches, movable-point frogs, and derails.

Model 5A is for direct operation. Control wires carry operating energy.

Models 5E and 5F are controlled by separate, externally housed relays.

Models 5G and 5H are controlled by built-in controllers.

Models 5A, 5E and 5G are for power operation only. Models 5F and 5H are for both power and hand-throw operation.

All machines are compact, mount on only two ties, and fit the same standardized layout. Machines meet requirements of A. A. R. load curve 1457 and provide ample thrust to operate the heaviest switches.

A built-in point detector checks both switch point position and switch locking.

For more detailed information, see Handbooks 24 and 63, or consult your GRS sales office.

For lock and point-detector connecting rods, throw rods, and terminal junction boxes, see Catalog Section 91, "Switch and Pipeline Fittings".

NOTE: Switch machines supplied with one lock rod and one detector rod cannot be later altered to take two lock rods and two detector rods.

MODEL 5A SWITCH MACHINE

The Model 5A switch machine is designed for power operation only, no means other than hand cranking being provided for manual operation.

It is designed for direct operation, dynamic indication, 110-volt central energy dc. Operating time is approximately three seconds. The point detector has three normal, three reverse, and two shunt contacts.

Changing from Right-Hand to Left-Hand or Vice Versa

A right-hand machine is one located on the right-hand side of the track when facing the switch points.

Switch machine, catalog number A85-100, with one lock rod and one point-detector rod, may be changed to left-hand by reversing the lock rod and point-detector rod in the machine and moving the throw bar connection to the opposite end.

Other machines, catalog numbers A85-110 through A85-140, with two lock rods and two point-detector rods, are listed for ordering either right-hand or left-hand, as these machines are somewhat more complex to change in the field.

Handbook 24 gives complete instructions for changing any Model 5A machine from left-hand to right-hand or vice versa.

MODEL 5A SWITCH MACHINE

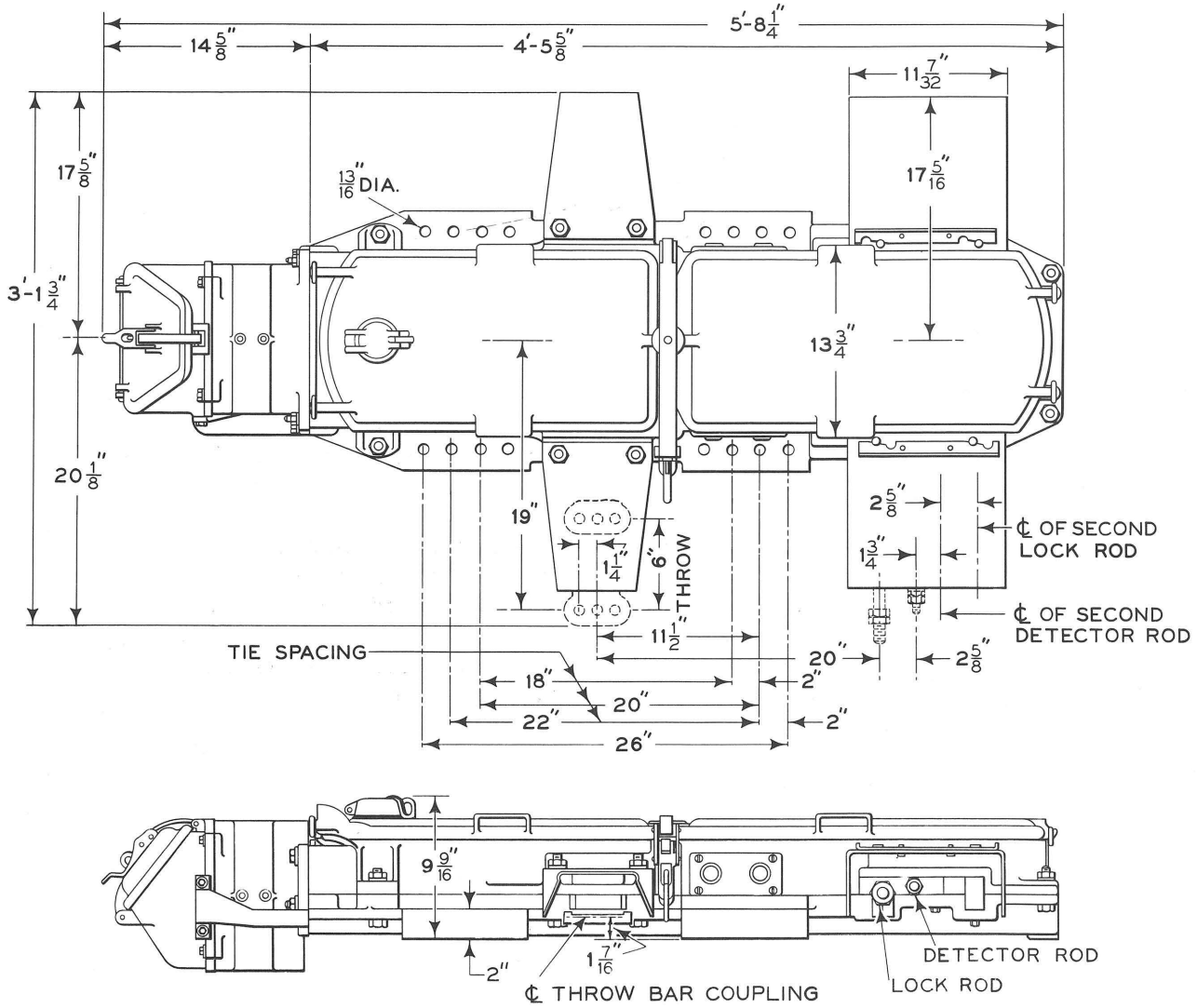

General dimensions

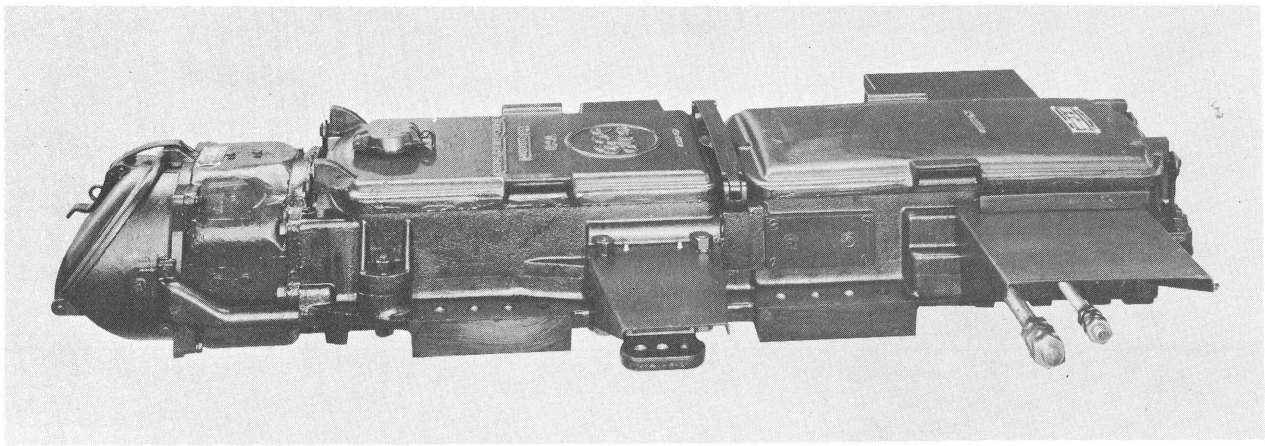

MODEL 5A SWITCH MACHINE

To order, specify "Model 5A Switch Machine" and give catalog number. Each machine includes one wire entrance coupling, A, B, C or D, page 22; one lock-rod lug, E, F or G, page 22; and one detector-rod lug, H, J or K, page 22. Please specify your choice of coupling and lugs by catalog numbers.

For single switch; single slip switch; derail; or double slip switch with machine having one lock and one point-detector rod.

OPERATING VOLTAGE D-C.	RIGHT OR LEFT HAND	CATALOG NUMBER
110	Right Only *	A85-100

For double slip switch with machine having two lock rods and two point-detector rods.

OPERATING VOLTAGE D-C.	RIGHT OR LEFT HAND	CATALOG NUMBER
110	Right	A85-110
"	Left	A85-120

For movable point frog.

OPERATING VOLTAGE D-C.	RIGHT OR LEFT HAND	CATALOG NUMBER
110	Right	A85-130
"	Left	A85-140

NOTE: To order telephone jack, see page 22 of this Catalog Section.

* CAN BE EASILY ALTERED IN FIELD TO LEFT-HAND, SEE PAGE 3.

Memoranda

MODEL 5E SWITCH MACHINE

The Model 5E switch machine is designed for power operation only. A hand crank is provided for making and checking adjustments, and for emergency use.

Control and overload relays are housed externally. Relays are not included with the machine, must be ordered separately. See "Switch Control" and "Switch-Overload" relays, Catalog Sections 62 and 65, "Type B Relays" and "Type K Relays", respectively.

Model 5E machine has a motor with a ceramic permanent magnet holding device, commutator shield and cover, and knife-edged point-detector contacts with extra heavy pressure.

Machines are equipped with renewable box style wear plates for the throw bar and for the lock and detector rods.

Operation may be 24 or 110 volts d. c.

Dynamic snubbing stops armature rotation at end of stroke.

Machine is designed for battery indication.

Operating time is approximately 3 seconds for 110-volt machines and 8 to 10 seconds for 24-volt machines.

Point detector has two normal, two reverse, two motor-control, and two shunt contacts. Motor-control contacts carry and break motor current directly.

Changing from Right-Hand to Left-Hand or Vice Versa

A right-hand machine is one located on the right-hand side of the track when facing the switch points.

Switch machine, catalog numbers A85-151 through A85-153 with one lock rod and one point-detector rod, may be changed to left hand by reversing the lock rod and point-detector rod in the machine and moving the throw bar connection to the opposite end.

Other machines, catalog numbers A85-156 through A85-173 with two lock rods and two point-detector rods, are listed for ordering either right hand or left hand, as these machines are somewhat more complex to change in the field.

Handbook 63 gives instructions for changing a Model 5E machine from left hand to right hand or vice versa. The more complex procedure for the Model 5E machine with two point-detector rods is the same as that described in Handbook 24 for the Model 5A machine.

MODEL 5E SWITCH MACHINE

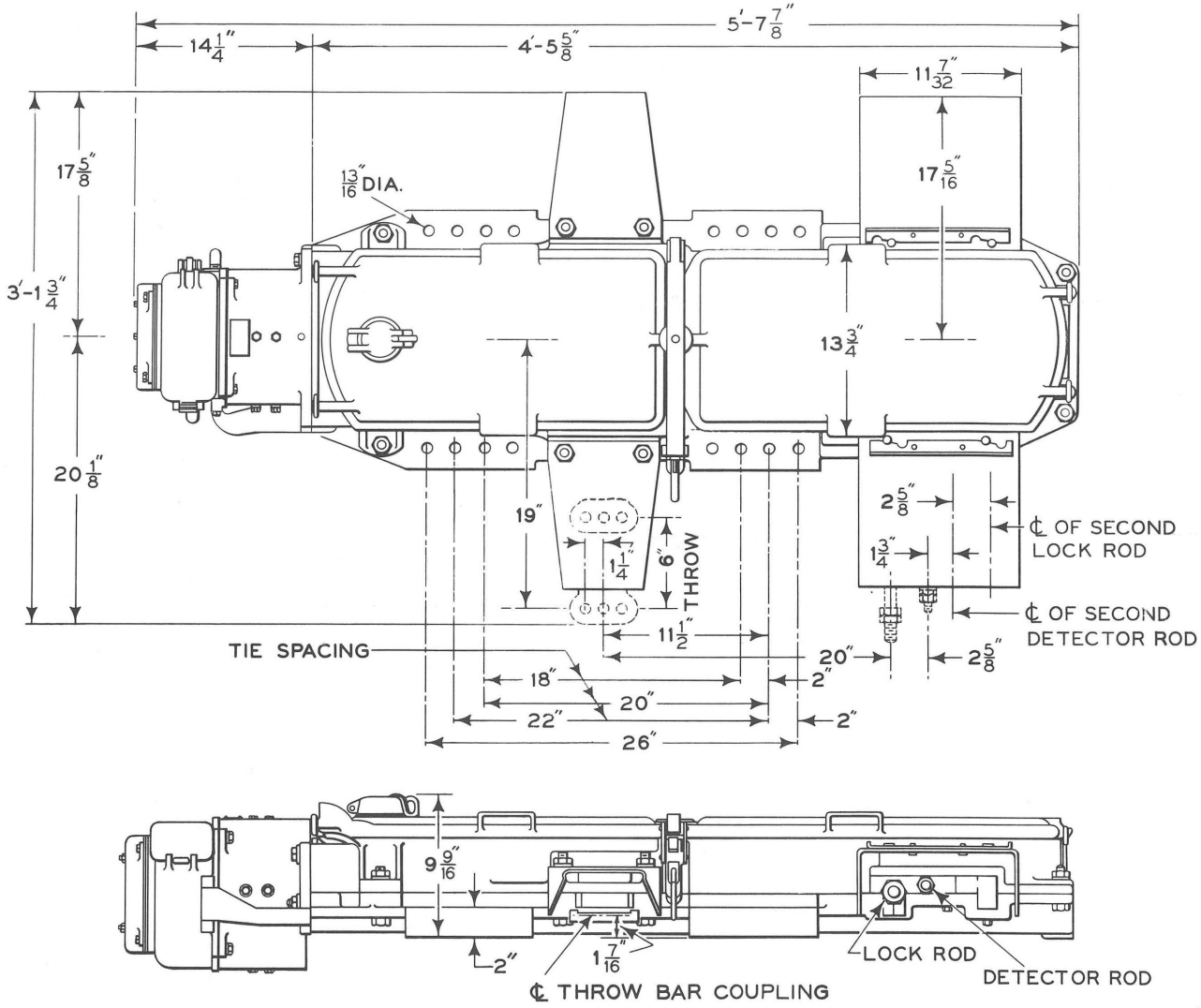

General dimensions

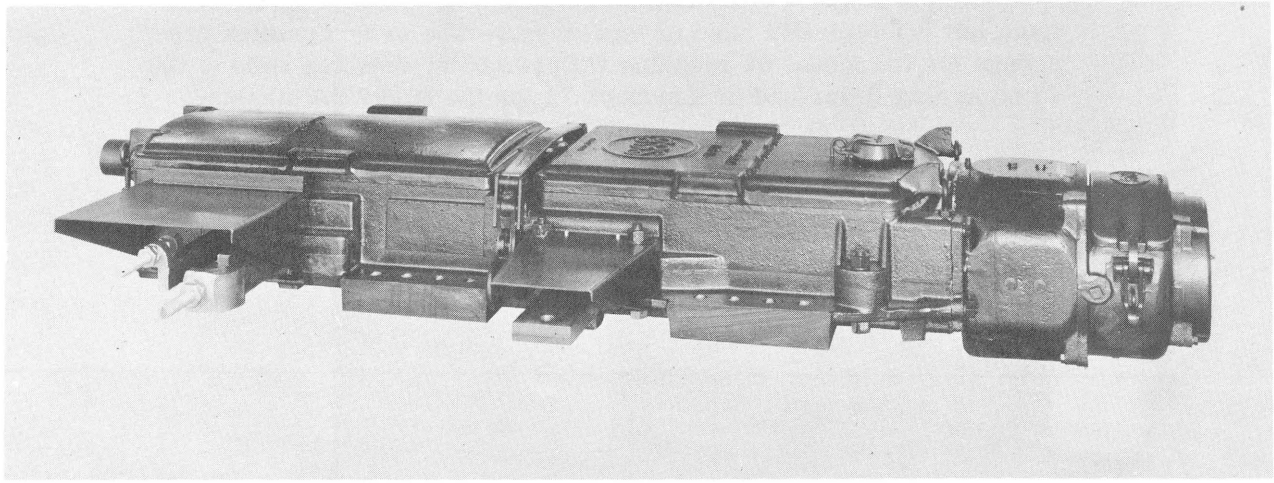

MODEL 5E SWITCH MACHINE

To order, specify "Model 5E Switch Machine" and give catalog number. Each machine includes one wire entrance coupling, A, B, C or D, page 22; one lock-rod lug, E, F or G, page 22; and one detector-rod lug, H, J or K, page 22. Please specify your choice of coupling and lugs by catalog numbers.

For single switch; single slip switch; derail; or double slip switch with machine having one lock rod and one point-detector rod.

OPERATING VOLTAGE D-C.	RIGHT OR LEFT HAND	CATALOG NUMBER
110	Right Only*	A85-151
24	" "	A85-153

For double slip switch with machine having two lock rods and two point-detector rods.

OPERATING VOLTAGE D-C.	RIGHT OR LEFT HAND	CATALOG NUMBER
110	Right	A85-156
"	Left	A85-158
24	Right	A85-161
"	Left	A85-163

For movable point frog.

OPERATING VOLTAGE D-C.	RIGHT OR LEFT HAND	CATALOG NUMBER
110	Right	A85-166
"	Left	A85-168
24	Right	A85-171
"	Left	A85-173

NOTE: Switch control and switch overload relays are not included with machine, must be ordered separately. See Catalog Sections 62 and 65, "Type B Relays" and "Type K Relays", respectively. To order telephone jack, see page 22 of this catalog section.

* CAN BE EASILY ALTERED IN FIELD TO LEFT-HAND, SEE PAGE 3.

Memoranda

MODEL 5F SWITCH MACHINE

The Model 5F switch machine is equipped with a dual-control mechanism for both power and hand-throw operation. A hand crank is also provided for making and checking adjustments.

Control and overload relays are housed externally. Relays are not included with the machine, must be ordered separately. See "Switch Control" and "Switch-Overload" relays, Catalog Sections 62 and 65, "Type B Relays" and "Type K Relays", respectively.

Model 5F machine has a motor with a ceramic permanent magnet holding device, commutator shield and cover, and knife-edged point-detector contacts with extra heavy pressure.

Machines are equipped with renewable box style wear plates for the throw bar and for the lock and detector rods.

Operation may be 24 or 110 volts d. c.

Dynamic snubbing stops armature rotation at end of stroke.

Machine is designed for battery indication.

Operating time is approximately 3 seconds for 110-volt machines and 8 to 10 seconds for 24-volt machines.

Point detector has two normal, two reverse, two motor-control, and two shunt contacts. Motor-control contacts carry and break motor current directly.

Changing from Right-Hand to Left-Hand or Vice Versa

A right-hand machine is one located on the right-hand side of the track when facing the switch points. Handbook 63 gives instructions for changing a Model 5F machine with one lock rod and one point-detector rod from left hand to right hand or vice versa. The more complex procedure for changing two lock rods and two point-detector rods of a Model 5F machine is the same as that described in Handbook 24 for the Model 5D machine.

MODEL 5F SWITCH MACHINE

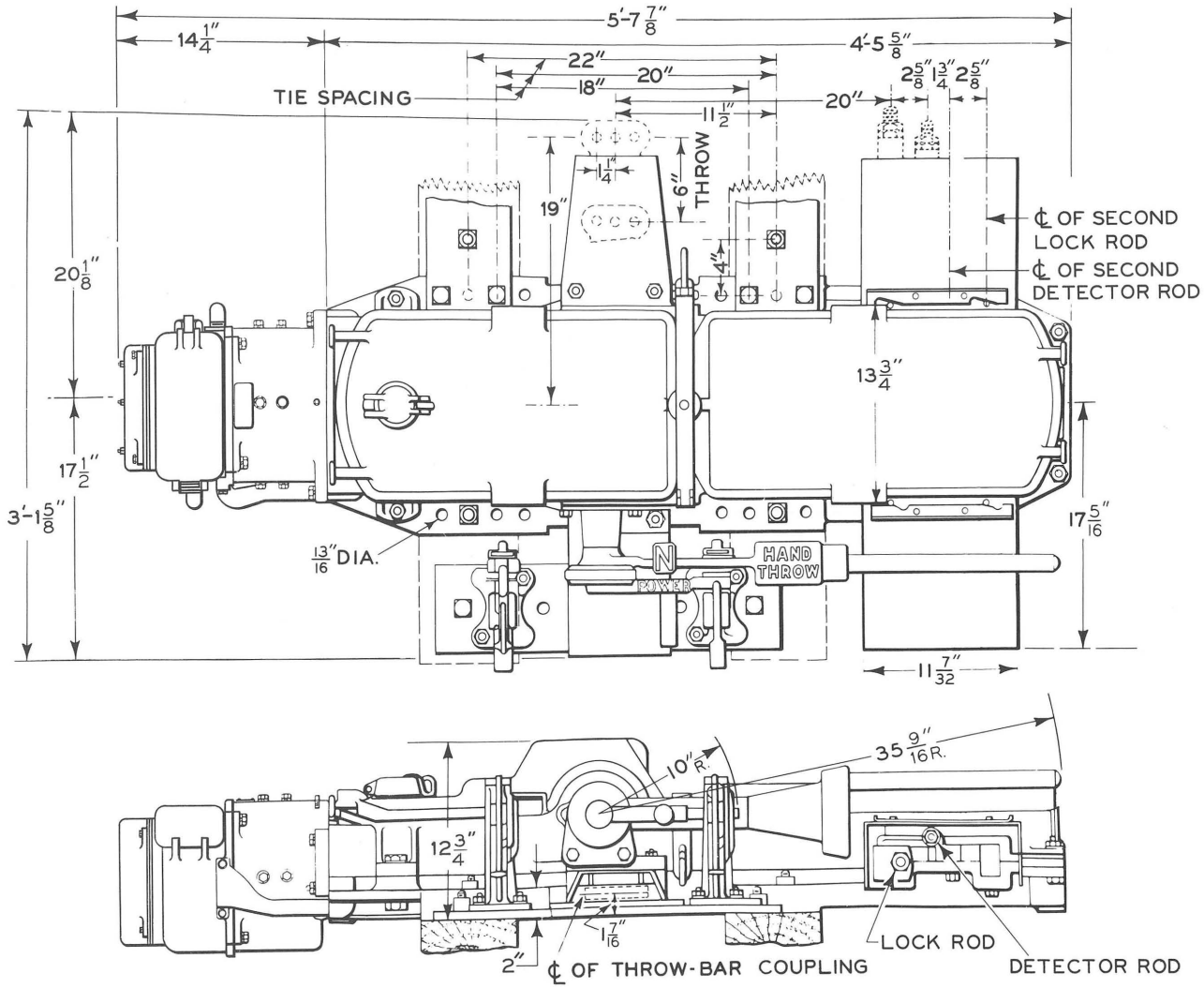

General dimensions

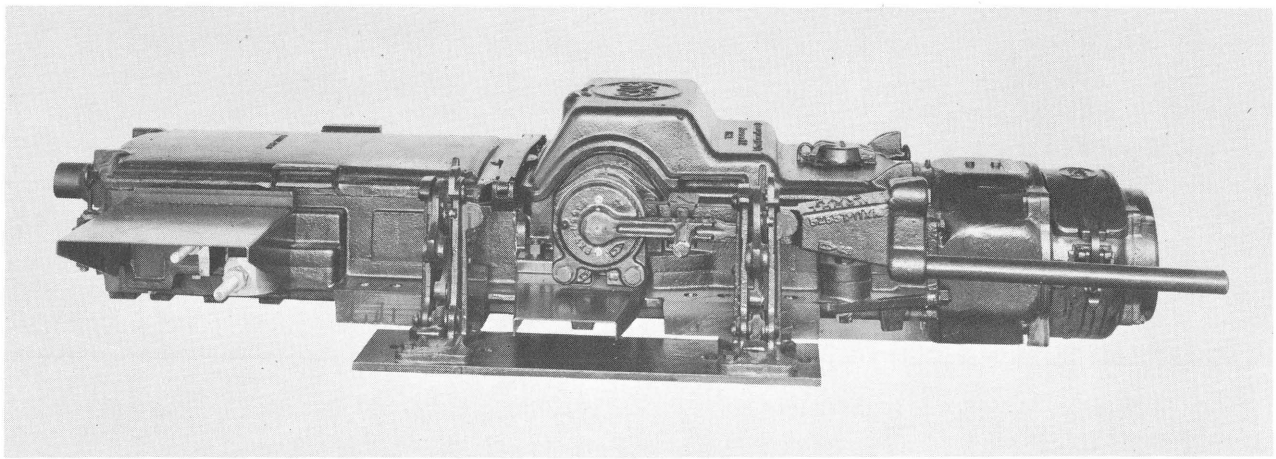

MODEL 5F SWITCH MACHINE

To order, specify "Model 5F Switch Machine" and give catalog number. Each machine includes one wire entrance coupling, A, B, C or D, page 22; one lock-rod lug, E, F or G, page 22; and one detector-rod lug, H, J or K, page 22. Please specify your choice of coupling and lugs by catalog numbers.

For single switch; single slip switch; derail; or double slip switch with machine having one lock and one point-detector rod.

OPERATING VOLTAGE D-C.	RIGHT OR LEFT HAND	CATALOG NUMBER
110	Right	A85-201
"	Left	A85-203
24	Right	A85-206
"	Left	A85-208

For double slip switch with machine having two lock rods and two point-detector rods.

OPERATING VOLTAGE D-C.	RIGHT OR LEFT HAND	CATALOG NUMBER
110	Right	A85-211
"	Left	A85-213
24	Right	A85-216
"	Left	A85-218

For movable point frog.

OPERATING VOLTAGE D-C.	RIGHT OR LEFT HAND	CATALOG NUMBER
110	Right	A85-221
"	Left	A85-223
24	Right	A85-226
"	Left	A85-228

NOTE: Switch control and switch overload relays are not included with machine, must be ordered separately. See Catalog Sections 62 and 65, "Type B Relays" and "Type K Relays, respectively. To order telephone jack, see page 22 of this catalog section.

Memoranda

MODEL 5G SWITCH MACHINE

The Model 5G switch machine is designed for power operation only. A hand crank is provided for making and checking adjustments, and for emergency use.

A built-in biased-neutral controller with dynamic snubbing is designed for two-wire polarized control. Operating energy is applied locally at the switch, either from a local source or from a central source transmitted to the location over bus wires.

Model 5G machine has a motor with a ceramic permanent magnet holding device, commutator shield and cover, and knife-edged point-detector contacts with extra heavy pressure.

Machines are equipped with renewable box style wear plates for the throw bar and for the lock and detector rods.

Operation may be 24 or 110 volts d. c.

Control may be 10 or 24 volts d. c.

Machine is designed for battery indication.

Operating time is approximately 3 seconds for 110-volt machines and 8 to 10 seconds for 24-volt machines.

Point detector has two normal, two reverse, two motor-control, and two shunt contacts.

Changing from Right-Hand to Left-Hand or Vice Versa

A right-hand machine is one located on the right-hand side of the track when facing the switch points.

Switch machine, catalog number A85-247 through A85-253 with one lock rod and one point-detector rod, may be changed to left hand by reversing the lock rod and point-detector rod in the machine and moving the throw bar connection to the opposite end.

Other machines, catalog numbers A85-255 through A85-285 with two lock rods and two point-detector rods, are listed for ordering either right hand or left hand, as these machines are somewhat more complex to change in the field.

The more complex procedure for changing a Model 5G machine from left hand to right hand or vice versa is the same as that described in Handbook 24 for the Model 5C machine.

MODEL 5G SWITCH MACHINE

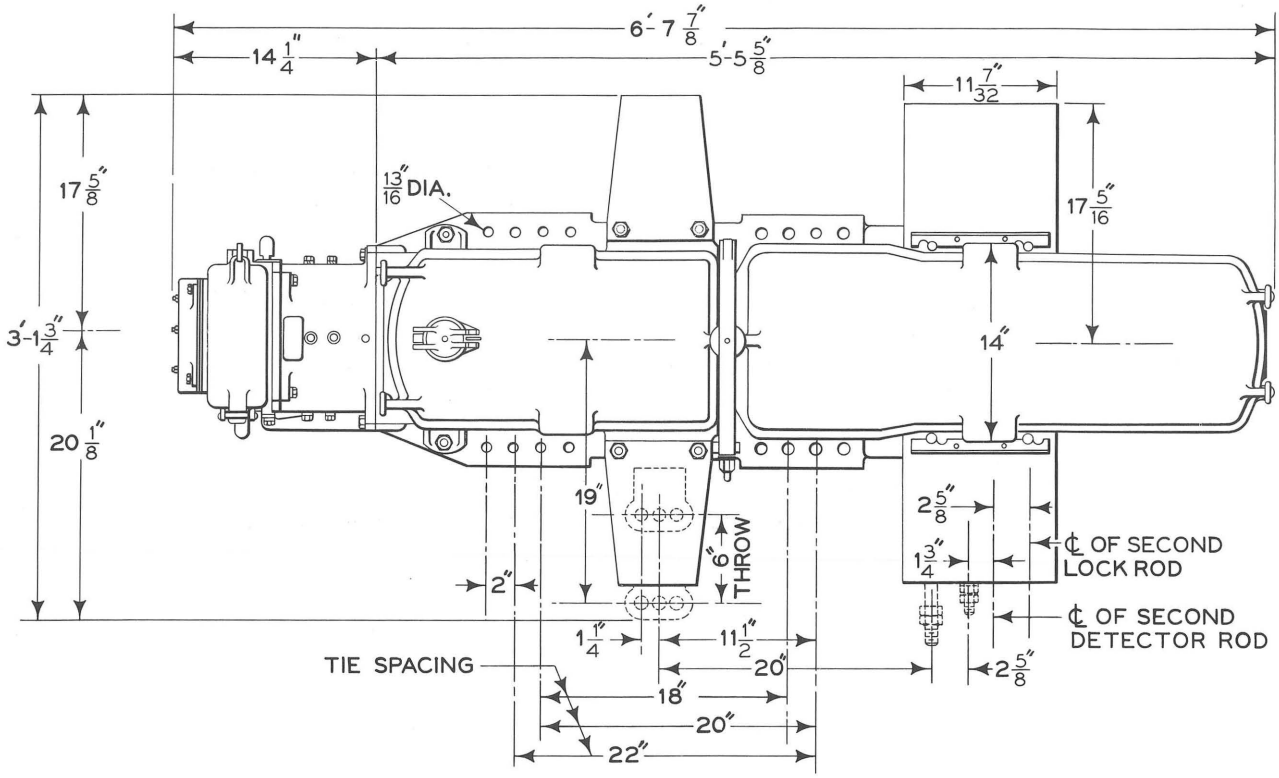

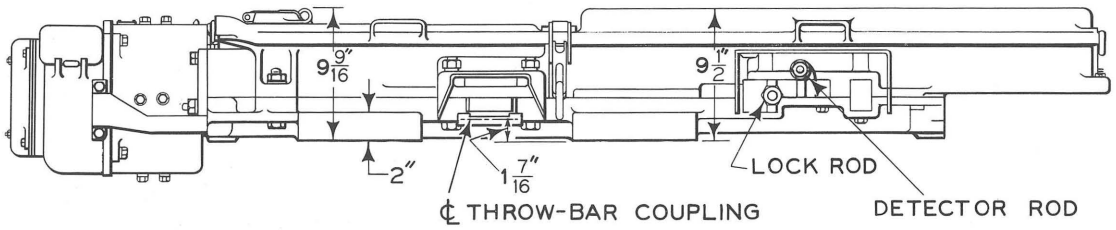

General dimensions

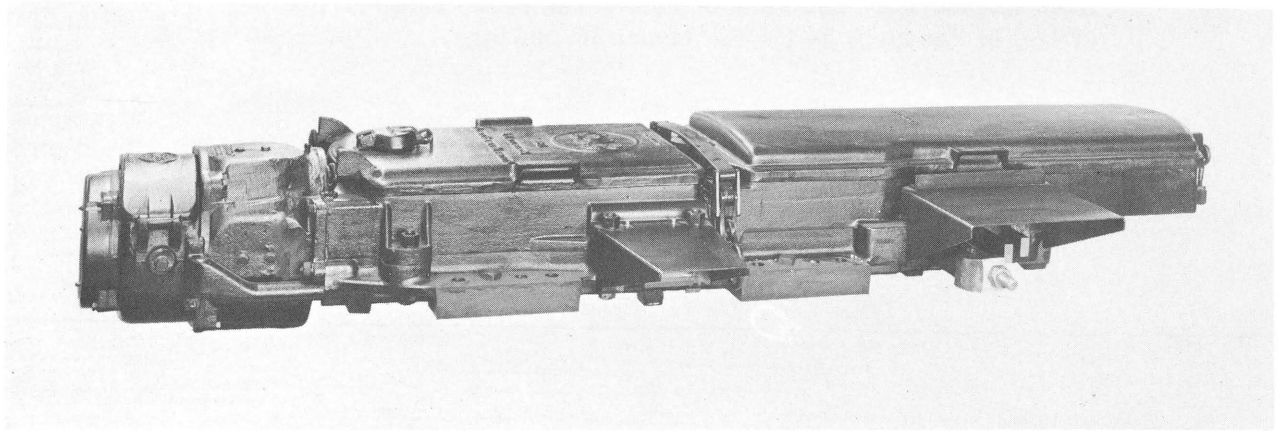

MODEL 5G SWITCH MACHINE

To order, specify "Model 5G Switch Machine" and give catalog number. Each machine includes one wire entrance coupling, A, B, C or D, page 22; one lock-rod lug, E, F or G, page 22; and one detector-rod lug, H, J or K, page 22. Please specify your choice of coupling and lugs by catalog numbers.

For single switch; single slip switch; derail; or double slip switch with machine having one lock rod and one point-detector rod.

OPERATING VOLTAGE D-C.	CONTROL VOLTAGE D-C.	RIGHT OR LEFT HAND	CATALOG NUMBER
110	10	Right Only *	A85-247
"	24	" "	A85-249
24	10	" "	A85-251
"	24	" "	A85-253

For double slip switch with machine having two lock rods and two point-detector rods.

OPERATING VOLTAGE D-C.	CONTROL VOLTAGE D-C.	RIGHT OR LEFT HAND	CATALOG NUMBER
110	10	Right	A85-255
"	"	Left	A85-257
"	24	Right	A85-259
"	"	Left	A85-261
24	10	Right	A85-263
"	"	Left	A85-265
"	24	Right	A85-267
"	"	Left	A85-269

For movable point frog.

OPERATING VOLTAGE D-C.	CONTROL VOLTAGE D-C.	RIGHT OR LEFT HAND	CATALOG NUMBER
110	10	Right	A85-271
"	"	Left	A85-273
"	24	Right	A85-275
"	"	Left	A85-277
24	10	Right	A85-279
"	"	Left	A85-281
"	24	Right	A85-283
"	"	Left	A85-285

NOTE: To order telephone jack, see page 22 of this catalog section.

* CAN BE EASILY ALTERED IN FIELD TO LEFT-HAND, SEE PAGE 3.

Memoranda

MODEL 5H SWITCH MACHINE

The Model 5H switch machine is equipped with a dual-control mechanism for both power and hand-throw operation. A hand crank is also provided for making and checking adjustments.

A built-in biased-neutral controller with dynamic snubbing is designed for two-wire polarized control. Operating energy is applied locally at the switch, either from a local source or from a central source transmitted to the location over bus wires.

Model 5H machine has a motor with a ceramic permanent magnet holding device, commutator shield and cover, and knife edged point-detector contacts with extra heavy pressure.

Machines are equipped with renewable box style wear plates for the throw bar and for the lock and detector rods.

Operation may be 24 or 110 volts d. c.

Control may be 10 or 24 volts d. c.

Machine is designed for battery indication.

Operating time is approximately 3 seconds for 110-volt machines and 8 to 10 seconds for 24-volt machines.

Point-detector has two normal, two reverse, two motor-control, and two shunt contacts.

Changing from Right-Hand to Left-Hand or Vice Versa

A right-hand machine is one located on the right-hand side of the track when facing the switch points. The procedure for changing a Model 5H machine from left hand to right hand or vice versa is the same as that described in Handbook 24 for the Model 5D machine.

MODEL 5H SWITCH MACHINE

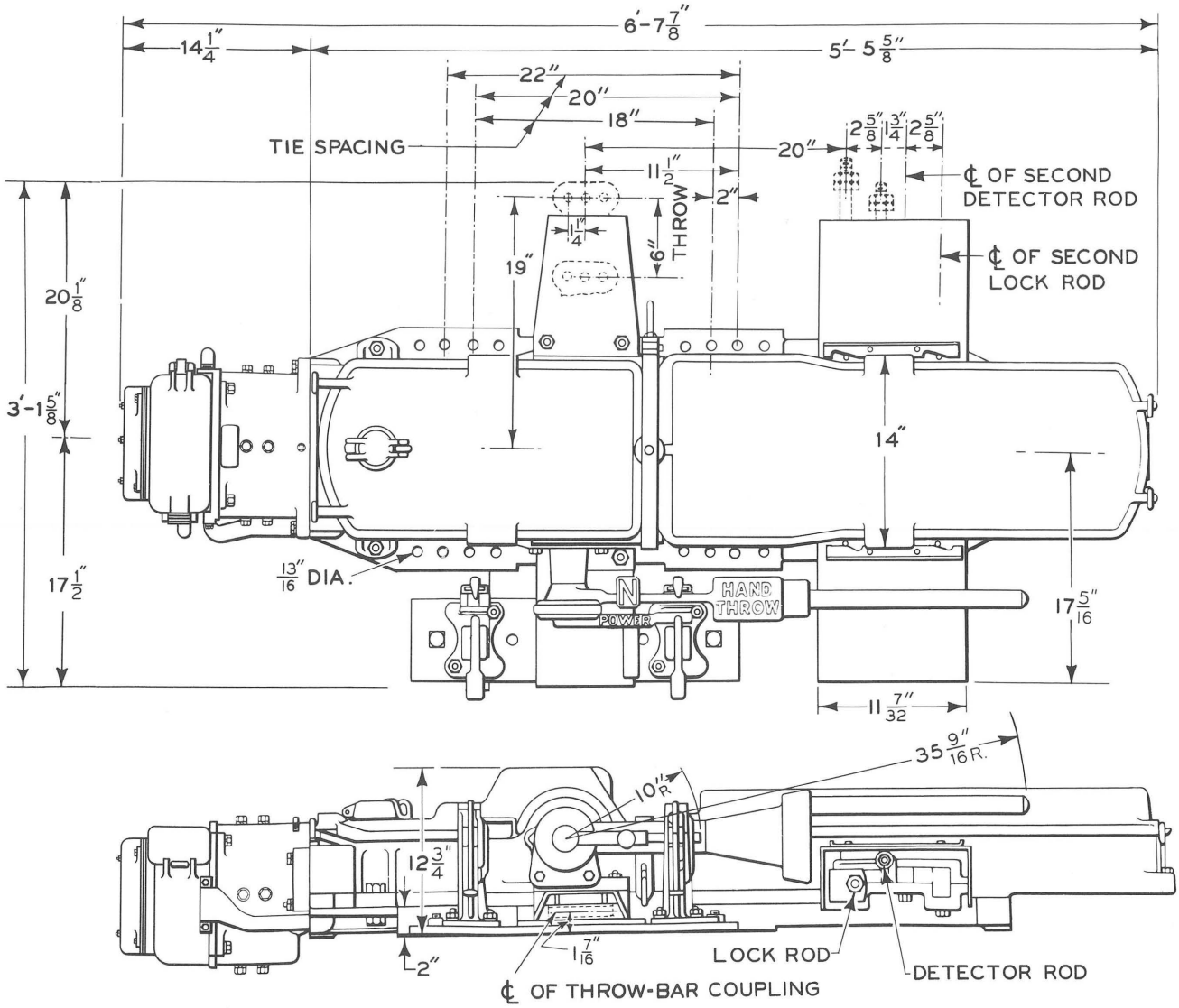

General dimensions

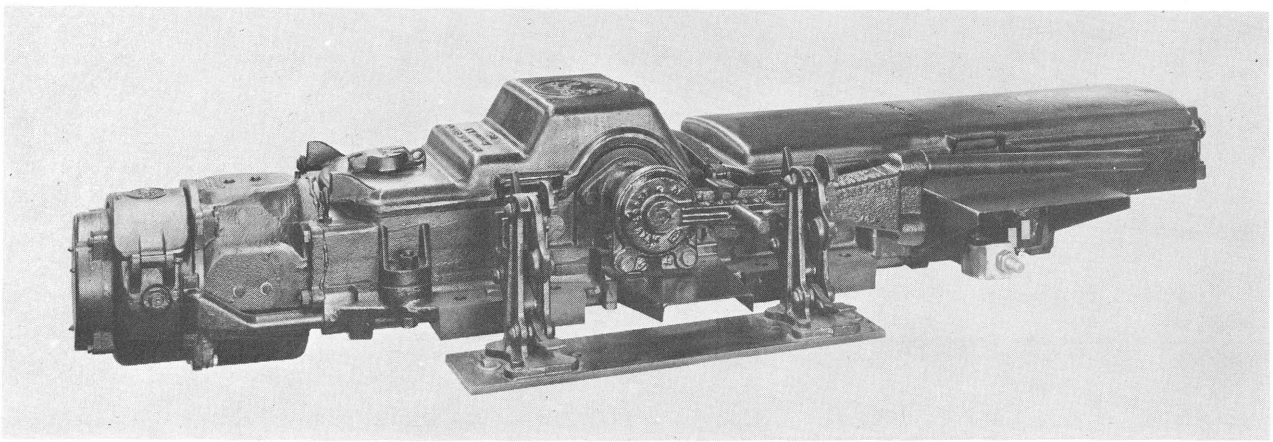

MODEL 5H SWITCH MACHINE

To order, specify "Model 5H Switch Machine" and give catalog number. Each machine includes one wire entrance coupling, A, B, C or D, page 22; one lock-rod lug, E, F or G, page 22; and one detector-rod lug, H, J or K, page 22. Please specify your choice of coupling and lugs by catalog numbers.

For single switch; single slip switch; derail; or double slip switch with machine having one lock and one point-detector rod.

OPERATING VOLTAGE D-C.	CONTROL VOLTAGE D-C.	RIGHT OR LEFT HAND	CATALOG NUMBER
110	10	Right	A85-302
"	"	Left	A85-304
"	24	Right	A85-307
"	"	Left	A85-309
24	10	Right	A85-312
"	"	Left	A85-314
"	24	Right	A85-317
"	"	Left	A85-319

For double slip switch with machine having two lock rods and two point-detector rods.

OPERATING VOLTAGE D-C.	CONTROL VOLTAGE D-C.	RIGHT OR LEFT HAND	CATALOG NUMBER
110	10	Right	A85-322
"	"	Left	A85-324
"	24	Right	A85-327
"	"	Left	A85-329
24	10	Right	A85-332
"	"	Left	A85-334
"	24	Right	A85-337
"	"	Left	A85-339

For movable point frog.

OPERATING VOLTAGE D-C.	CONTROL VOLTAGE D-C.	RIGHT OR LEFT HAND	CATALOG NUMBER
110	10	Right	A85-342
"	"	Left	A85-344
"	24	Right	A85-347
"	"	Left	A85-349
24	10	Right	A85-352
"	"	Left	A85-354
"	24	Right	A85-357
"	"	Left	A85-359

NOTE: To order telephone jack, see page 22 of this catalog section.

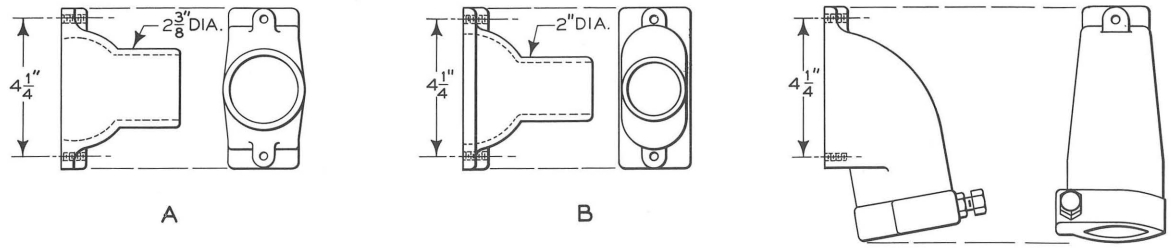

A B C

WIRE ENTRANCE COUPLINGS

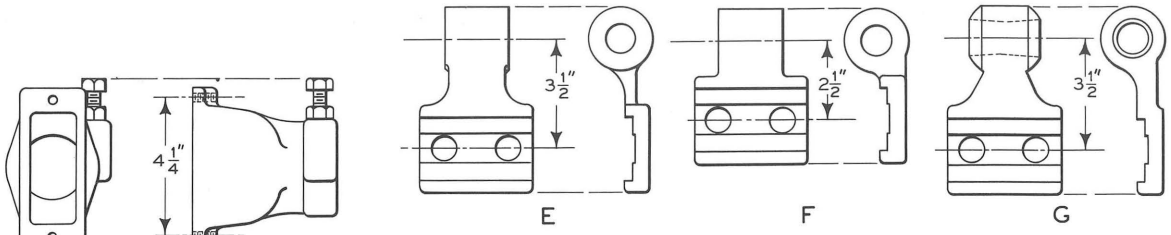

D E F G

LOCK ROD LUGS

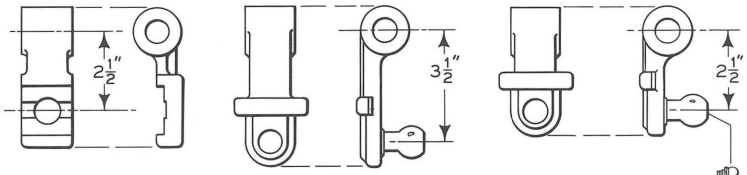

H J K 6

DETECTOR ROD LUGS

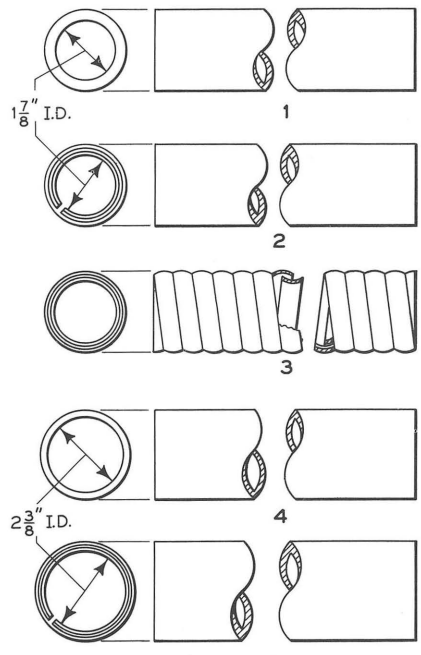

CONDUIT

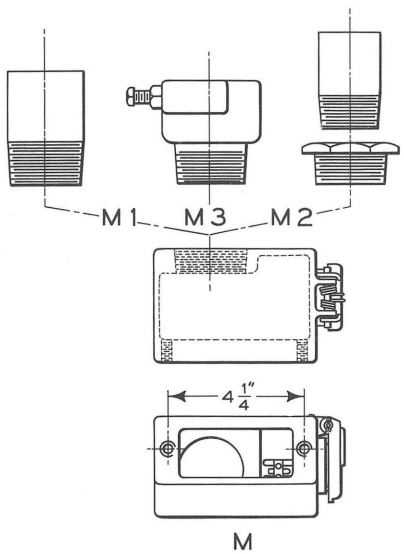

M

ENTRANCE COUPLING WITH TELEPHONE JACK

Wire entrance coupling and conduit, lock-rod and detector-rod lugs.

Wire Entrance Couplings and Conduit Lock-Rod and Detector-Rod Lugs

Order by catalog number and name shown in bold type

REF.	NAME	CATALOG NUMBER
A	COUPLING, for 2-3/8" I. D. split or solid rubber conduit	A85-500
B	COUPLING, for 1-7/8" I. D. split or solid rubber conduit	A85-501
C	COUPLING, offset, for 2" flexible conduit	A85-502
D	COUPLING, straight, for 2" flexible conduit.	A85-503
E	LUG, 3-1/2" spacing, for 1" dia. lock rod	A85-560
F	LUG, 2-1/2" spacing, for 1" dia. lock rod	A85-561
G	LUG, 3-1/2" spacing, swivel type, for 1" dia. lock rod, includes cup nuts	A85-562
H	LUG, 2-1/2" spacing, for 3/4" dia. detector rod	A85-563
J	LUG, 3-1/2" spacing, for 3/4" dia. detector rod	A85-564
K	LUG, 2-1/2" spacing, for 3/4" dia. detector rod	A85-565
M	WIRE ENTRANCE COUPLING with telephone jack, mounted in case, no conduit fittings	A85-510
M1	As above, except with fitting for 2-3/8" I. D. rubber conduit	A85-511
M2	Same as Ref. M., except with fittings for 1-7/8" I. D. rubber conduit	A85-512
M3	Same as Ref. M, except with fitting for 2" flexible conduit	A85-513
1	CONDUIT, 1-7/8" I. D., solid rubber, length 3'	A85-520
2	CONDUIT, 1-7/8" I. D. split rubber, length 3'.	A85-525
3	CONDUIT, 2" flexible, length 3'	A85-530
4	CONDUIT, 2-3/8" I. D., solid rubber, length 3'	A85-535
5	CONDUIT, 2-3/8" I. D., split rubber, length 3'	A85-540
6	GREASE FITTING, for detector rod lugs	P87-101

NOTE: Each switch machine includes your choice of wire entrance coupling, A, B, C or D, lock-rod lug, E, F or G and point-detector rod lug H, J or K.

Memoranda

Detail Parts for Switch Machines

Parts List

Order by catalog number and name shown in bold type

REF.	NAME	CATALOG NUMBER
A	**BRACKET COMPLETE**, upper bearing for clutch and gear with main pinion. Includes grease fittings, oil cup, bushing for clutch shaft and stud for cut-out switch	P85-701
B	**GEAR BRACKET COMPLETE**, for intermediate gear and clutch. Includes studs for cut-out switch, bushing for clutch, oil cup, grease fitting and wire clip	P85-702
C	**BEARING BRACKET COMPLETE**, for main gear, selector clutch and clutch operating mechanism. Includes stud for motor cut-out switch.	P85-858
D	**PLATE**, top, for use on bracket Ref. C	P85-823
E	**LOCK STAND**, for selector and hand-throw levers	P85-794
1	**FITTING**, oiler, for brackets Refs. A and B	P85-384
2	**FITTING**, grease	P85-379
3	**WASHER**, lock, for Ref. 4	P85-109
4	**SCREW**, for fastening brackets Refs. A, B and C to gear frame	P85-235
5	**BUSHING**, for brackets Refs. A and B	P85-279
6	**STUD**, for brackets Refs A and B	P85-147
7	**STUD**, for gear bracket	P85-151
8	**FITTING**, grease, for intermediate gear shaft	P85-378
9	**CLIP**, for wires	P85-418
10	**SCREW**, for clip	P62-213
10A	**WASHER**, lock, for above	P76-145
11	**STUD**, for bearing bracket	P85-154
12	**WASHER**, lock, for Ref. 13	P85-110
13	**SCREW**, for fastening top plate to bearing bracket	P85-255
14	**PLATE**, for lock stands	P85-719
15	**SCREW**, for fastening lock stand to plate	P85-115
15A	**WASHER**, lock, for above	P85-802

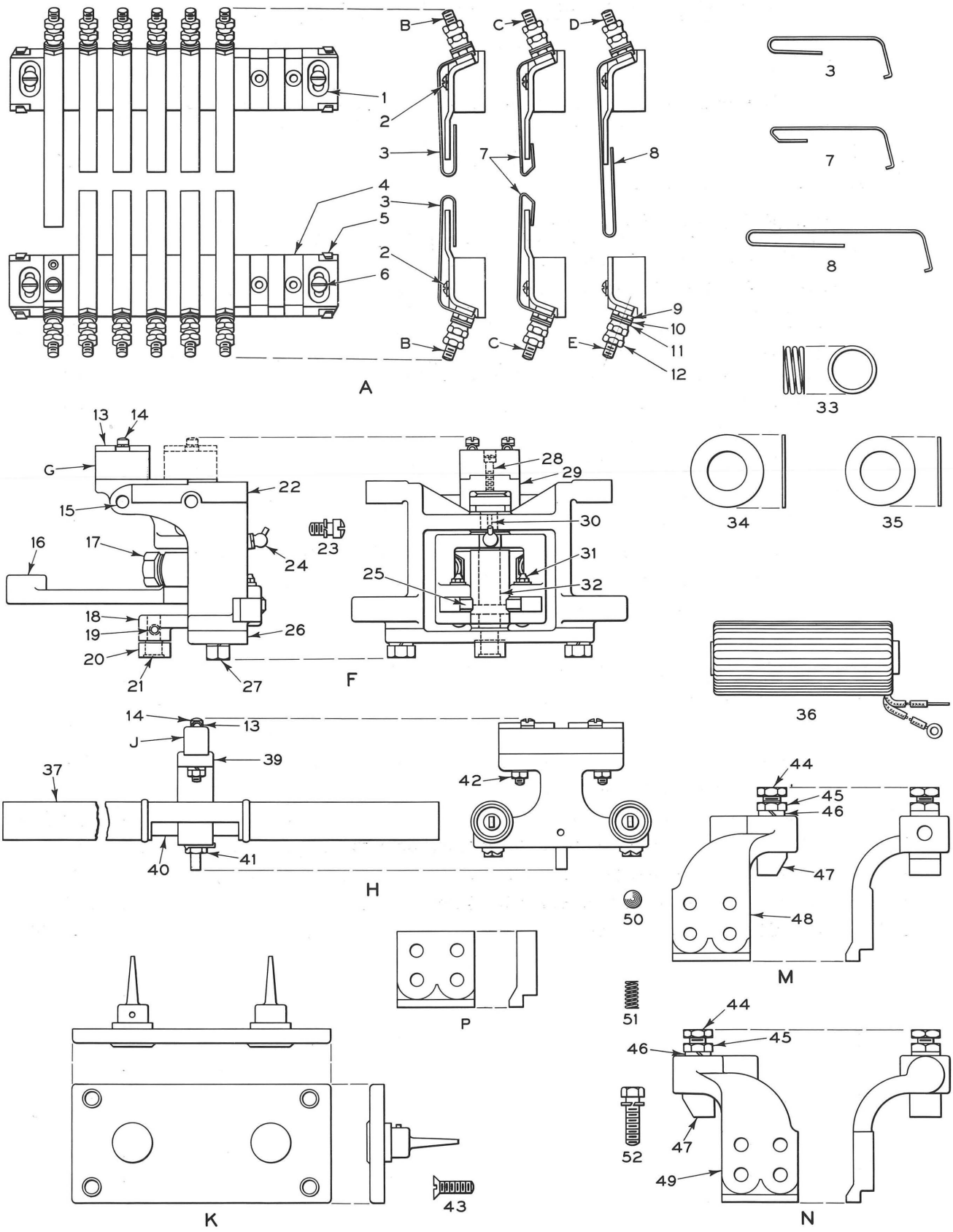

Pole-changer contacts and movements.

Pole-Changer Contacts and Movements

Parts List

Order by catalog number and name shown in bold type

REF.	NAME	CATALOG NUMBER
A	POLE-CHANGER CONTACT GROUP COMPLETE, includes four motor-control contacts and two coil-control contacts. For models 5A and 5B 110-volt, high-speed switch machines	P85-739
B	CONTACT COMPLETE, includes stop, contact and base nut	P85-743
C	CONTACT COMPLETE, includes stop, contact and base nut	P85-744
D	CONTACT COMPLETE, includes stop, contact and base nut	P85-745
E	POST COMPLETE, includes stop	P85-753
F	MOVEMENT COMPLETE, for pole-changer, includes grease fittings	P85-760
*G	CONTACT BLOCK COMPLETE	P85-658
H	PLUNGER COMPLETE, for pole-changer	P85-602
J	CONTACT BLOCK COMPLETE	P85-819
K	PLATE COMPLETE, for pole-changer	P85-603
M	ARM COMPLETE, right-hand, for operating pole-changer on Models 5A and 5B switch machines	P85-604
N	ARM COMPLETE, left-hand, for operating pole-changer on Models 5A and 5B switch machines	P85-605
P	ARM, only for Models 5C, 5D, 5E, 5F, 5G and 5H switch machines	P85-717
1	WASHER, for screw Ref. 6	P85-178
2	SCREW, for mounting contacts	P65-206
2A	WASHER, lock, for above	P85-390
3	CONTACT SPRING, for Ref. B	P85-575
4	BLOCK, insulation	P85-529
5	WASHER, for block	P85-559
6	SCREW, for mounting insulation blocks	P85-248
7	CONTACT SPRING, for Ref. C	P85-576
8	CONTACT SPRING, for Ref. D	P85-577
9	NUT, base, for terminal posts	P62-333
10	WASHER, lock, for terminal posts	P85-804
11	WASHER, for terminal posts	P76-108
12	NUT, for terminal posts	P76-131
13	CONTACT, only, for blocks Refs. G and J	P85-376
14	SCREW, for mounting contact	P85-870
14A	WASHER, lock, for above	P62-334
15	PIN, for yoke	P85-145
16	ARM COMPLETE	P85-593
17	BOLT, for arm Ref. 16	P85-718
17A	NUT, for above	P85-262

* Some older machines may require two blocks Ref. G.

Pole-Changer Contacts and Movements

Parts List

Order by catalog number and name shown in bold type

REF.	NAME	CATALOG NUMBER
17B	WASHER, shim, for above .015" thick	P85-386
17C	WASHER, shim, for above .021" thick	P85-387
18	ARM COMPLETE	P85-594
19	PIN, for stud Ref. 21	P85-301
20	ROLLER	P85-372
21	STUD, for roller	P85-352
22	YOKE, for contacts	P85-712
23	SCREW, for mounting movement	P85-439
23A	WASHER, lock, for above	P85-124
24	FITTING, grease, angle	P87-101
25	ROLLER, for arm Ref. 18	P85-277
25A	STUD, for above	P85-146
26	BEARING	P85-714
27	SCREW, for bearing	P85-118
27A	WASHER, lock, for above	P85-124
28	SCREW, for mounting contact block	P65-231
29	BASE, for contact block	P85-589
30	KEY, for shaft	P85-463
31	FITTING, grease	P85-381
32	SHAFT COMPLETE	P85-703
33	SPRING, for pole-changer coils	P85-194
34	WASHER, steel, for pole-changer coils	P85-184
35	WASHER, fibre, for pole-changer coils	P85-160
36	COIL, for pole-changer, for 110-volt dc. high-speed switch machines	P85-339
37	TUBE, for plunger	P85-528
39	YOKE, for plunger	P85-574
40	PLUNGER, only	P85-601
41	SCREW, for plunger	P85-592
41A	WASHER, lock, for above	P85-218
42	NUT, for contact block	P85-427
42A	WASHER, lock, for above	P65-168
43	SCREW, for mounting plate Ref. K	P85-311
44	SCREW, for arms	P85-228
45	NUT, for screw Ref. 44	P81-203
46	WASHER, lock, for above	P85-122
47	PLUNGER, for arms	P85-159

Pole-Changer Contacts and Movements

Parts List

Order by catalog number and name shown in bold type

REF.	NAME	CATALOG NUMBER
48	ARM, right-hand, for Ref. M	P85-715
49	ARM, left-hand, for Ref. N	P85-716
50	BALL, for plunger Ref. 47	P85-347
51	SPRING, for plunger Ref. 47	P85-363
52	SCREW, for attaching arms Refs. M, N and P to lock rods	P85-129
52A	WASHER, lock, for above	P85-124

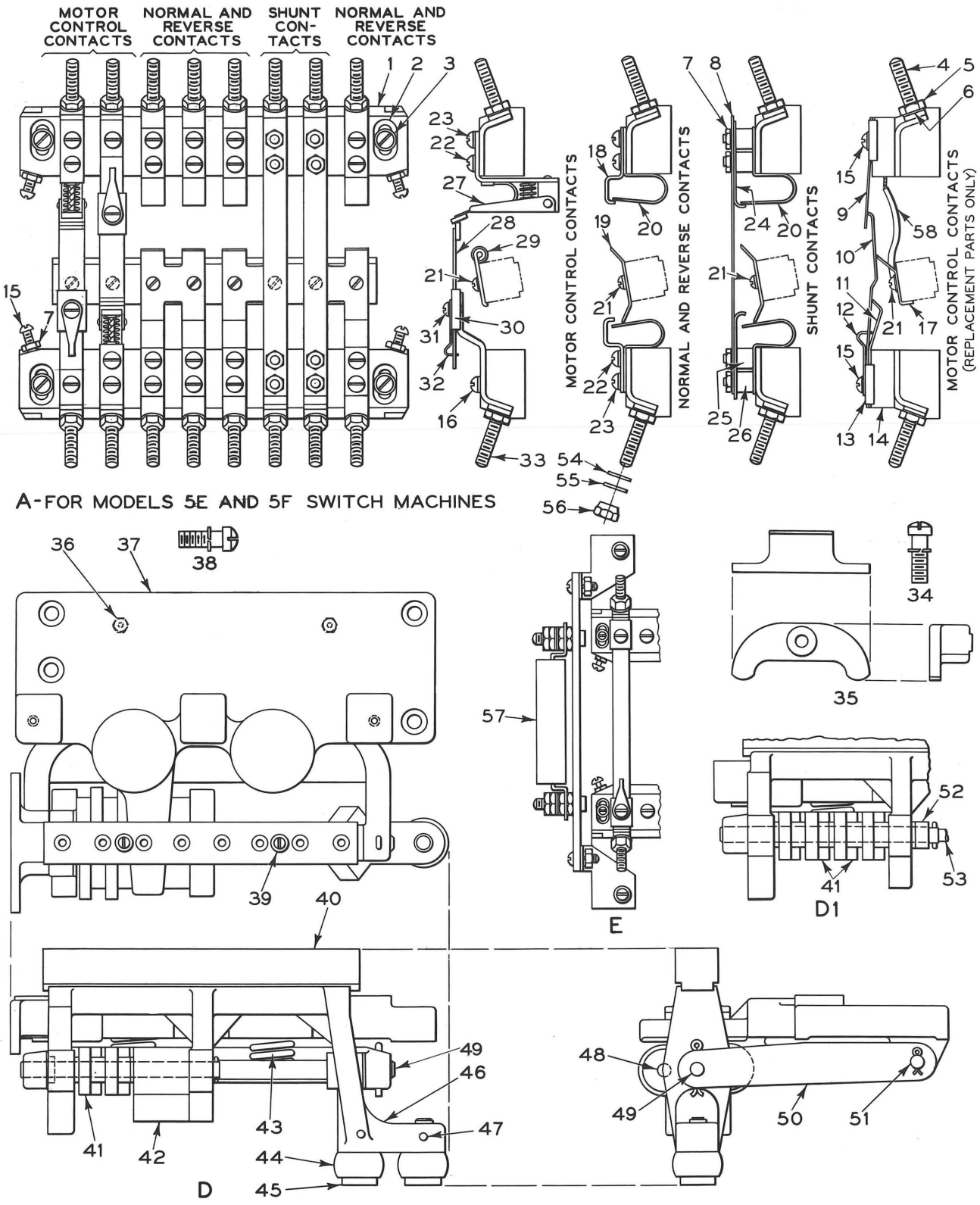

Point-detector contacts and movements.

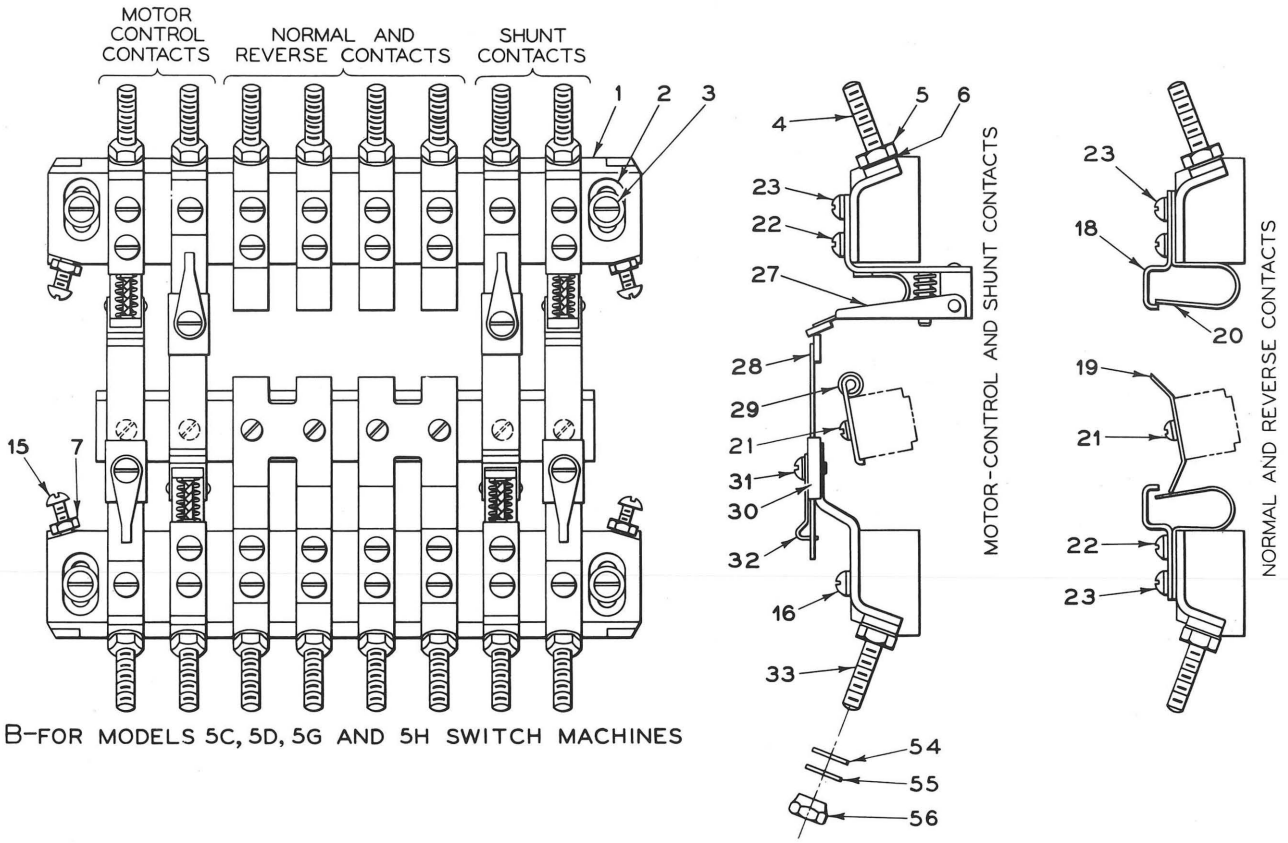

B–FOR MODELS 5C, 5D, 5G AND 5H SWITCH MACHINES

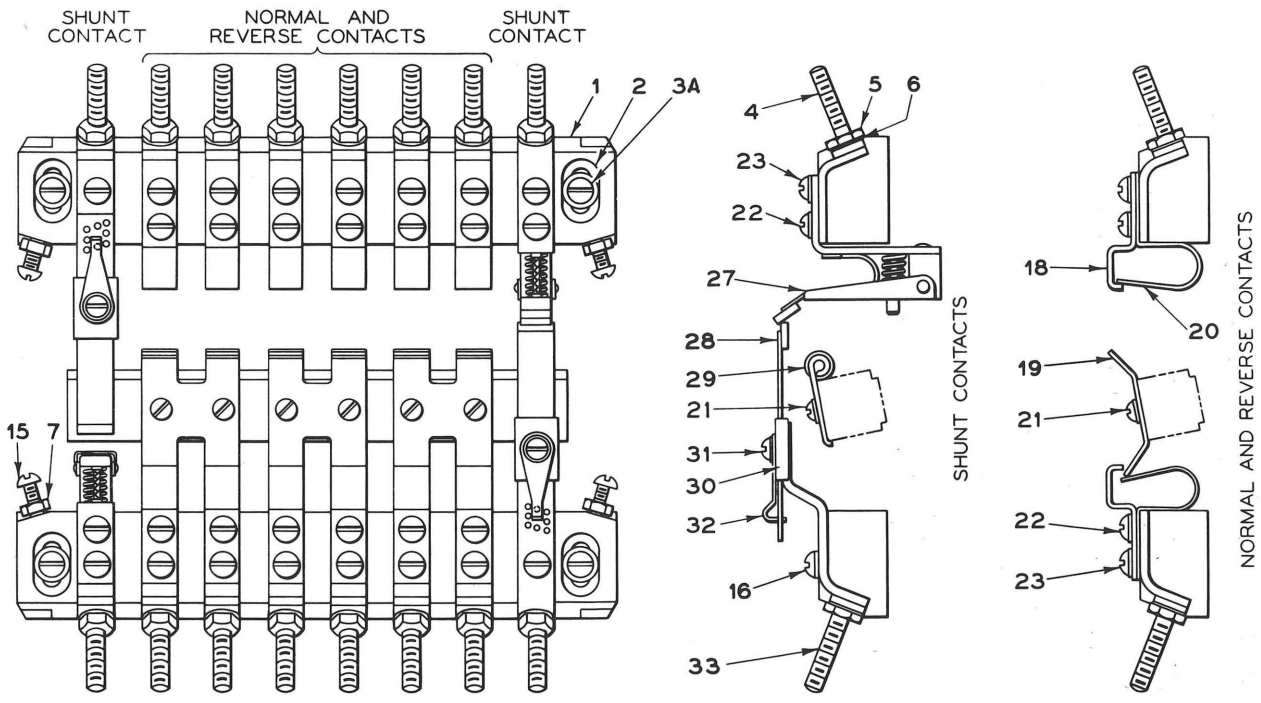

C–FOR MODELS 5A AND 5B SWITCH MACHINES

Point-detector contacts and movements.

Point-Detectors and Movements

Parts List

Order by catalog number and name shown in bold type

REF.	NAME	CATALOG NUMBER
A	POINT-DETECTOR CONTACT GROUP COMPLETE, having three normal; three reverse; two motor-control contacts and two shunt strips, for Model 5E and 5F switch machines	P85-979
B	POINT-DETECTOR CONTACT GROUP COMPLETE, having two normal, two reverse contacts, two shunt contacts, and two motor-control contacts, for Models 5C, 5D, 5G and 5H switch machines	P85-740
C	POINT-DETECTOR CONTACT GROUP COMPLETE, having three normal, three reverse contacts, and two shunt contacts, for Models 5A and 5B switch machines	P85-741
D	POINT-DETECTOR MOVEMENT COMPLETE, for all switch machines having one point-detector rod	P85-761
D1	As above, except for switch machines having two-point-detector rods.	P85-762
E	HEATER COMPLETE, 15 watts, 110 volts	P85-927
1	BLOCK, insulation, for contacts	P85-529
2	WASHER, for screw Ref. 3	P85-178
3	SCREW, 1-1/4" long, for mounting blocks, for Refs. A and B.	P85-248
3A	As above, except 1" long, for mounting block, for Ref. C	P85-982
4	TERMINAL POST COMPLETE, includes post and stop only	P85-753
5	NUT, for terminal posts	P62-333
6	WASHER, for terminal posts	P50-157
7	NUT, for insulators and screws Ref. 15	P76-129
7A	WASHER, lock, for above	P62-401
8	STRIP, shunt	P85-322
9	FINGER, only	P85-751
10	FINGER, only	P85-750
11	STOP, for finger Ref. 10	P85-393
12	ADJUSTER, for finger Ref. 10	P85-356
13	WASHER, for adjuster Ref. 12	P85-220
14	BLOCK, for fingers	P85-343
15	SCREW, for locking screw Ref. 3 also for washers Ref. 13	P85-236
16	SCREW, for mounting blocks Ref. 14 and post Ref. 33	P65-206
16A	WASHER, lock for above.	P85-390
17	FINGER, only	P85-967
18	STOP, for springs Ref. 20.	P85-391
19	FINGER, only	P85-755
20	SPRING, only	P85-752
21	SCREW, for fastening fingers Refs 17 and 19 also arm Ref. 29 to block	P85-234
21A	WASHER, lock for above	P62-402
22	SCREW, for mounting stops Ref. 18	P85-238
22A	WASHER, lock, for above	P62-401

CATALOG SECTION 85
Electric Switch Machines
Model 6

Parts list are available on request

GENERAL RAILWAY SIGNAL COMPANY
ROCHESTER, NEW YORK
Printed in U. S. A.

A-2104

January 1963

GENERAL INFORMATION

The GRS Model 6 switch machine is designed for use primarily in flat- or gravity-type classification yards and industrial spurs.

The Model 6 has adequate power for throwing switches of large rail and is reliable under all weather conditions. The mechanism of the machine is so constructed that the switch can be trailed without damage to the machine, switch points, or fittings.

The Model 6 is designed for power operation only, no means other than hand cranking being provided for manual operation.

The Model 6 is furnished for 110-volt, d-c operation, regular or high speed. The regular-speed machine operates in 1.2 seconds; the high-speed machine in 0.6 second. It has two normal and two reverse motor control contacts; one normal and one reverse correspondence contact, and contacts for controlling signal and indication lamps.

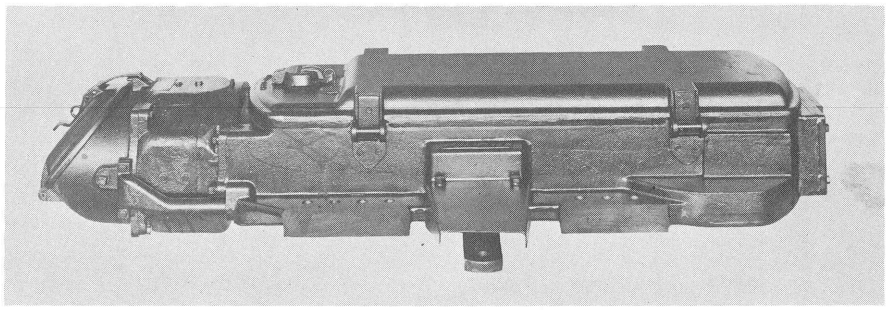

Model 6 switch machine.

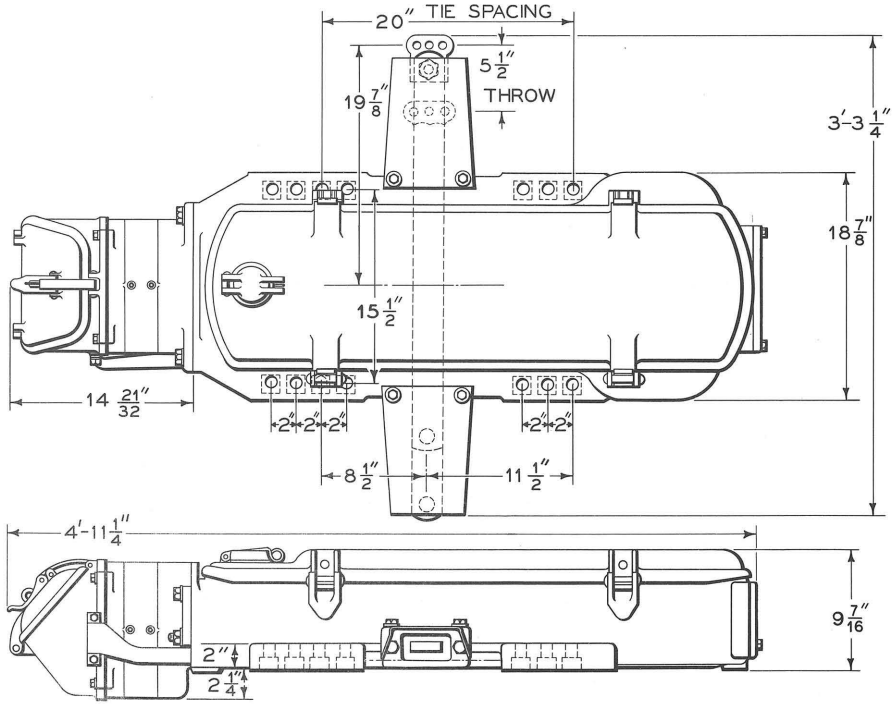

General dimensions.

MODEL 6 SWITCH MACHINE

Switch machines are listed below with or without transformer group, which, if required for clearance track circuit equipment, may be assembled in end of machine.

The transformer group includes the following:

1 - One Type K 1/2, 110 volt, 60 cycles, .010 KVA transformer for supplying energy for clearance track circuits. The primary has taps at 6 and 98 volts. There are two secondaries, each 3 volts, with a tap at 2 volts.

2 - Two Type S2, 1 volt, 60 cycles, step-up transformers, one for each clearance track circuit. There is one 20-volt secondary.

3 - Two adjustable resistors for regulating the voltage of indication lights.

4 - Sixteen terminal posts.

To order, specify "Model 6 Switch Machine" and give catalog number. Each machine includes one wire entrance coupling, Ref. 1, 2, 3 or 4, page 44 and one throw bar coupling, Ref. 7 or 8, page 44. Please specify your choice of couplings by catalog numbers.

OPERATING VOLTAGE D-C.	SPEED	CATALOG NUMBER	
		With Transformer Group	Without Transformer Group
110	Regular	A85-700	A85-703
110	High	A85-705	A85-709

MODEL 6 SWITCH MACHINE

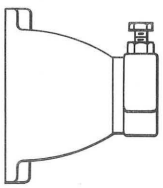
1

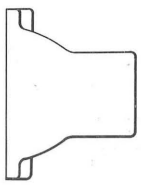
2

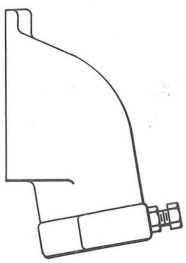
3

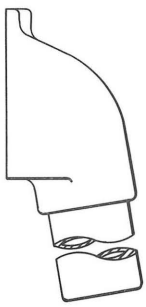
4

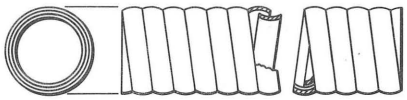
5

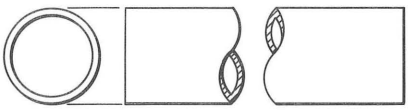
6

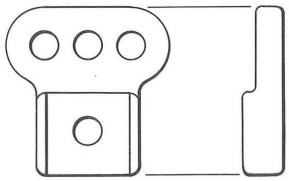
7

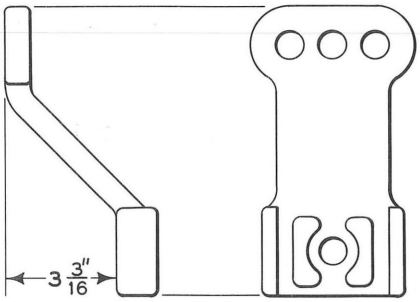

8

Order by catalog number and name shown in bold type

REF.	NAME	CATALOG NUMBER
1	COUPLING, straight, for 2" flexible conduit	A85-503
2	COUPLING, straight, for 2 3/8" I.D. rubber conduit	A85-500
3	COUPLING, offset, for 2" flexible conduit	A85-502
4	COUPLING, offset, for 2 3/8" I.D. rubber conduit	P85-932
5	CONDUIT, 2" flexible, length 3'	A85-530
6	CONDUIT, 2 3/8" I.D. solid rubber, length 3'	A85-535
7	COUPLING, for throw bar	P85-933
8	COUPLING, offset, for throw bar	P85-934

Memoranda

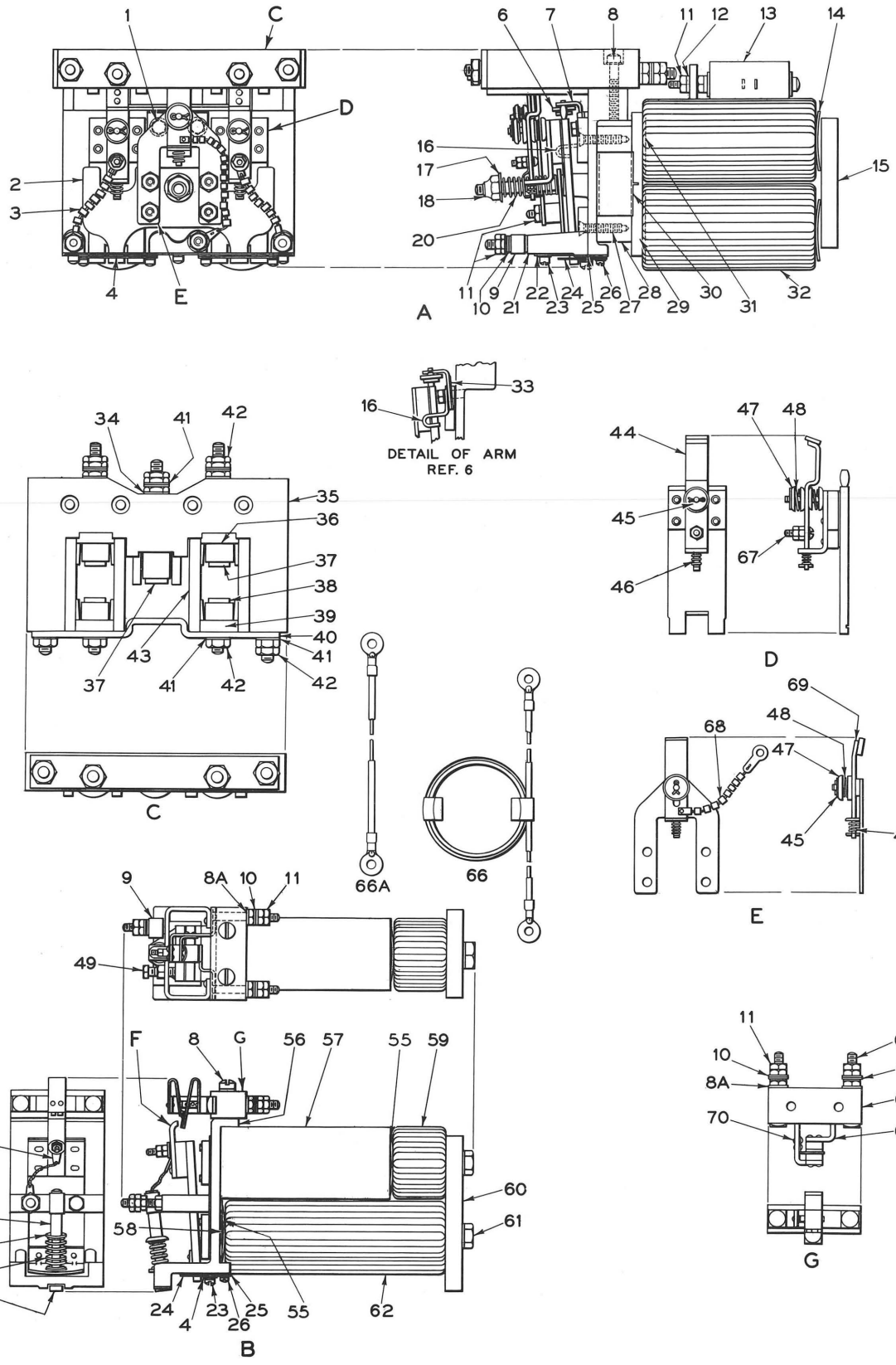

Contactor and overload relay.

Contactor and Overload Relay

For Biased-Neutral Controller
Parts List

Order by catalog number and name shown in bold type

REF.	NAME	CATALOG NUMBER
55	WASHER, spring, for coil	P62-158
56	CORE AND BRACKET COMPLETE, for overload relay	P85-876
57	SLUG, for overload relay	P85-978
58	WASHER, flat, for coil	P85-207
59	COIL, for overload relay	P85-369
60	YOKE, for overload relay	P85-453
61	SCREW, for fastening core and bracket to yoke	P85-244
61A	WASHER, lock, for above	P85-124
62	COIL, for use with 10-volt control	P85-367
62A	As above, except for 24-volt control	P85-368
63	SCREW, used as terminal post	P85-135
63A	WASHER, lock, for above	P62-401
64	BLOCK, only	P85-556
65	SUPPORT COMPLETE, for overload relay	P85-757
66	CONNECTOR COMPLETE, for use with coil Ref. 59 for 110-volt d-c high-speed switch machines	P85-447
66A	As above, except for 24-volt, high-speed switch machines	P85-449
67	SCREW, for connector Ref. 3 and finger Ref. 44	P85-308
67A	NUT, for above	P85-924
67B	WASHER, lock, for above	P65-730
68	CONNECTOR	P85-448
69	FINGER COMPLETE, with contact	P85-836
70	SUPPORT COMPLETE, with spring and stop	P85-756

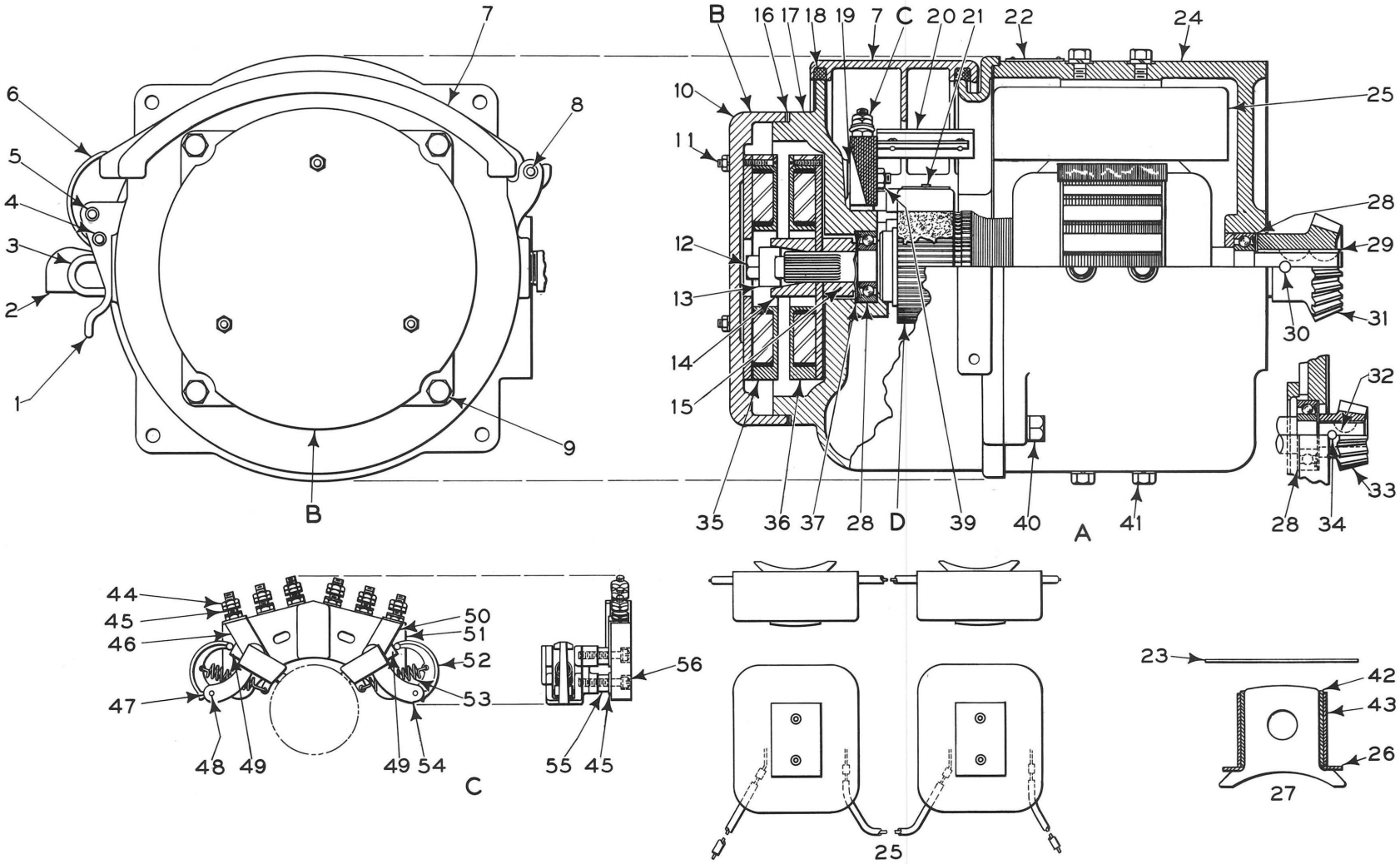

Switch machine motors.

Switch Machine Motors

For Models 5E, 5F, 5G and 5H Switch Machines
24-and 110-volt, direct current
For use only with machines with dynamic snub.
Parts List
Order by catalog number and name shown in bold type

REF.	NAME	CATALOG NUMBER
A	MOTOR COMPLETE, 110-volt, direct-current, high speed, with magnetic detent	P85-537
A1	As above, except 24-volt	P85-536
B	DETENT COMPLETE, for Models 5E, 5F, 5G & 5H switch machines	P85-283
B1	DETENT COMPLETE, with commutator shield and cover for Models 5A and 5B switch machines using motor 45630-13	P85-980
B2	DETENT COMPLETE, with commutator shield and cover for Model 5B switch machine using motor 45630-14, also for Models 5C & 5D switch machines using motors 45630-12 or -14.	
	NOTE: Models 5C and 5D switch machines must be equipped with biased-neutral controller, catalog numbers P85-827, P85-828, P85-829 or P85-830, when using a motor with detent.	P85-981
C	BRUSH HOLDER COMPLETE, does not include brushes	P85-223
D	ARMATURE COMPLETE, for 110-volt motor	P85-538
D1	As above, except for 24-volt motor	P85-539
1	HASP, for cover	P85-310
2	VENTILATOR, for case	P81-204
2A	PLUG, pipe	P85-127
3	STAPLE, for hasp	P85-312
4	PIN, roll, for strap	P85-314
5	PIN, roll, for hasp	P85-316
6	STRAP, for cover	P85-362
7	COVER COMPLETE	P85-789
8	PIN, roll, for cover	P85-313
9	SCREW, for fastening detent to motor	P85-130
9A	WASHER, lock, for above	P85-124
10	CASE, only	P85-541
11	SCREW, No. 10-32, for fastening magnets to case	P85-330
11A	NUT, for above	P85-941
11B	WASHER, lock, for above	P76-318
12	SCREW, for cone	P85-231
12A	WASHER, lock, for above	P81-205
13	CONE, only	P85-263
14	SPACER.	P85-423
15	SPACER.	P85-422

Switch Machine Motors

For Models 5E, 5F, 5G and 5H Switch Machines

24-and 110-volt, direct current

Parts List

Order by catalog number and name shown in bold type

REF.	NAME	CATALOG NUMBER
16	GASKET, for case	P85-296
17	CASE, only	P85-542
18	GASKET, 2'-9" long, for cover. Specify number feet	P85-460
19	WASHER, for brush holder	P85-221
20	SHIELD, for armature	P85-282
21	COVER, for commutator	P85-811
22	NAME PLATE, for motor	P85-140
22A	SCREW, for above	P85-797
23	WASHER, fibre, for coils	P85-307
24	CASE, only	P85-540
25	COIL, set, for 24-volt motor, consists of two coils and pole pieces	P85-936
25A	As above, except for 110-volt motor	P85-935
26	WASHER, insulating	P85-161
27	POLE PIECE	P85-338
28	BEARING, ball, for each end of armature shaft	P85-573
29	KEY, for pinion of 110-volt motor	P85-101
30	PIN, roll, for pinion of 110-volt motor	P85-318
31	PINION, for 110-volt motor	P85-509
32	KEY, for pinion of 24-volt motor	P85-128
33	PINION, for 24-volt motor	P85-507
34	PIN, roll, for pinion of 24-volt motor	P85-319
35	MAGNET COMPLETE	P85-281
36	MAGNET COMPLETE	P85-280
37	WASHER, wave, for bearing	P85-182
39	NUT, for brush holder	P85-455
39A	WASHER, lock, for above	P85-124
40	SCREW, for fastening front bearing to case	P85-440
40A	WASHER, lock, for above	P85-122
41	SCREW, for mounting pole pieces	P85-243
41A	WASHER, lock, for above	P85-124
42	INSULATION, for coils	P85-232
43	INSULATION, 1/32" thick, for coils	P85-290
43A	As above, except 1/16" thick	P85-291
44	NUT, for terminal posts	P62-333
45	WASHER, for terminal posts	P76-108
46	CONNECTOR, left hand	P85-256

Switch Machine Motors

For Models 5E, 5F, 5G and 5H Switch Machines
24-and 110-volt, direct current
Parts List

Order by catalog number and name shown in bold type

REF.	NAME	CATALOG NUMBER
47	HOLDER, left hand	P85-375
48	PIN, for arms	P85-214
49	BRUSH, right or left hand, for 110-volt motors	P85-396
49A	As above, except for 24-volt motors	P85-395
50	CONNECTOR, right hand	P85-257
51	BLOCK, for brush holder	P85-783
52	ARM, for brush	P85-213
53	SPRING, for arm	P85-215
54	HOLDER, right hand	P85-374
55	SPACER, for holders	P85-582
56	SCREW, for fastening holders to block	P85-120
56A	WASHER, lock, for above	P85-801

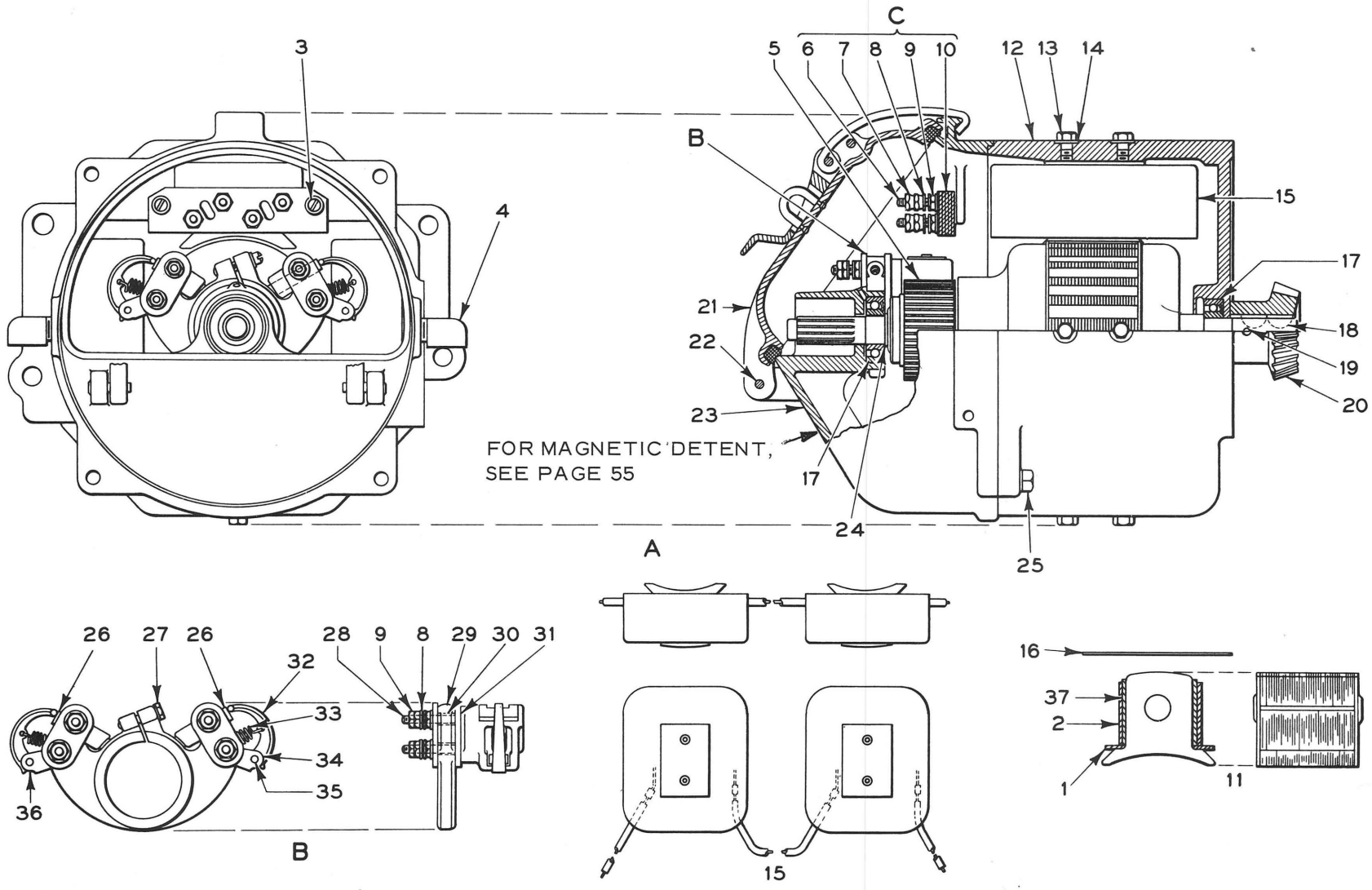

Switch machine motor.

CATALOG SECTION 85

Electric Switchman®

GENERAL RAILWAY SIGNAL COMPANY

ROCHESTER, NEW YORK

Printed in U. S. A.

A-1702

November 1963

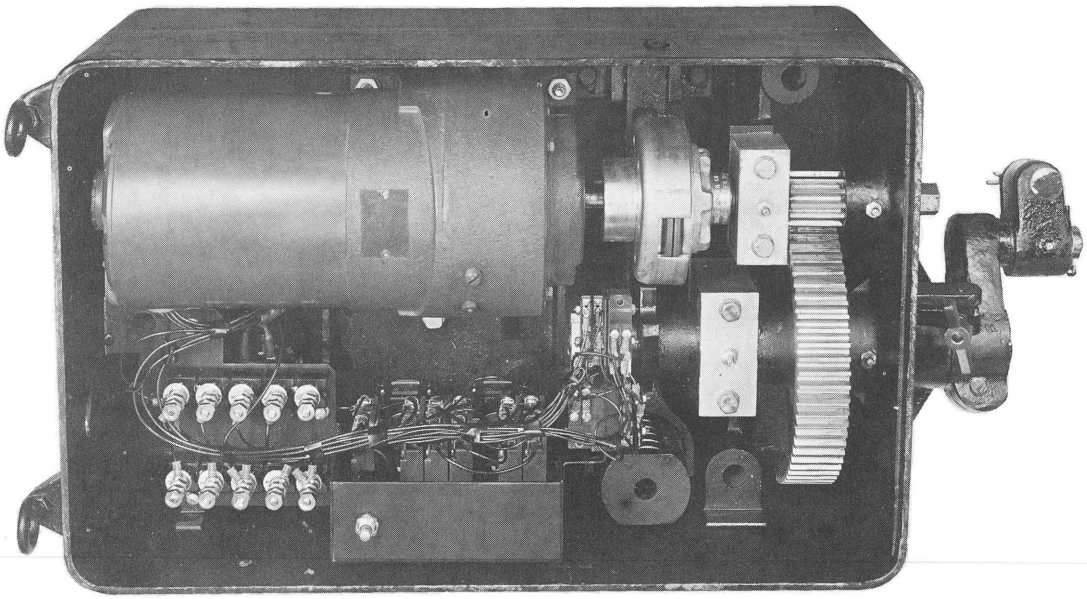

GENERAL DESCRIPTION

The trailable Electric Switchman is a simple, compact, electric switch machine designed for use in place of hand-throw switch stands in flat yards, receiving and departure yards, and similar noninterlocked service, including operation of derails and blue-flagging devices.

In a trailing move, when a wheel moves into the closed point controlled by the Switchman, the holding force provided by a spring-loaded cam is overcome, and the points begin to move in the forced direction. At a predetermined point of opening - about an inch - the circuitry establishes a call in the direction of trailing. The motor then drives the points to the opposite stock rail to align the switch in correspondence with traffic.

The Switchman uses 110-volt, 60-cycle a-c for both control and operation. Built-in normal and reverse contactors, which are mechanically interlocked, control the direction of motor operation and provide instant reversibility. The single-phase motor, which draws 7 to 9 amperes, drives a throw-rod operating crank through a gear-head reduction, friction clutch, pinion, and sector gear. The 5 1/2-inch throw-rod stroke takes approximately two seconds. A heavy, spring-loaded cam holds the crank securely at both ends of

the stroke. Contacts within the Switchman indicate the machine normal, reverse, and out-of-correspondence.

The Switchman can be hand operated by a hand crank (ratchet handle wrench with hex. socket, (Reference C, page 54) placed on the external projection of the pinion shaft.

The Switchman mounts on two framed ties in any position; left-hand or right-hand, and on the open or closed point side. It is waterproof to 4-1/4 inches above the base of the housing.

If a detector track circuit is used, the circuiting of the Switchman will be arranged to prevent switch operation when the track circuit is occupied, and to permit the completion of any stroke started before track circuit occupancy.

The Switchman has contacts to provide an indication on the control panel of switch point position. These contacts can be also used for control of an associated switch indicator.

A switch circuit controller may be used to check switch point position if desired.

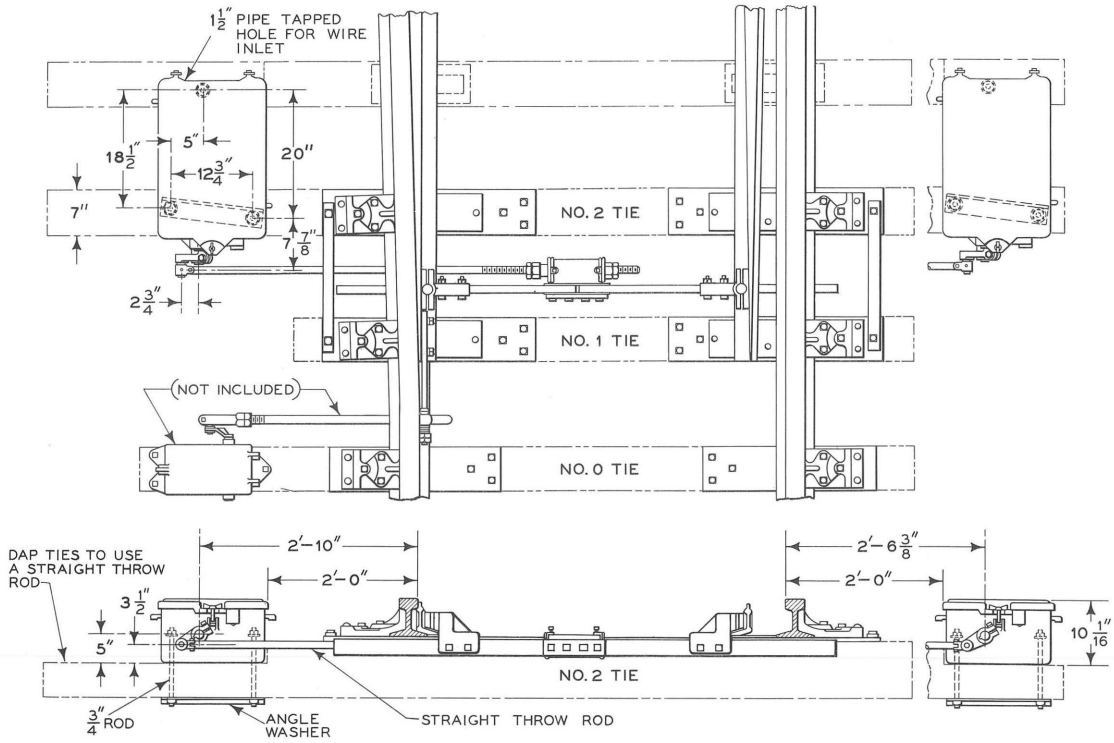

Typical layout complete with Electric Switchman (trailable).

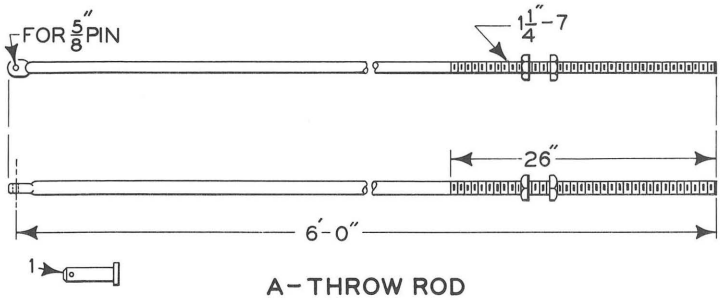

A-THROW ROD

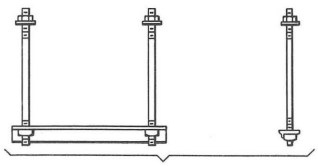

B-HOLD-DOWN KIT

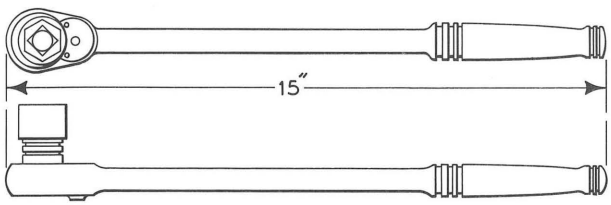

C-HAND CRANK

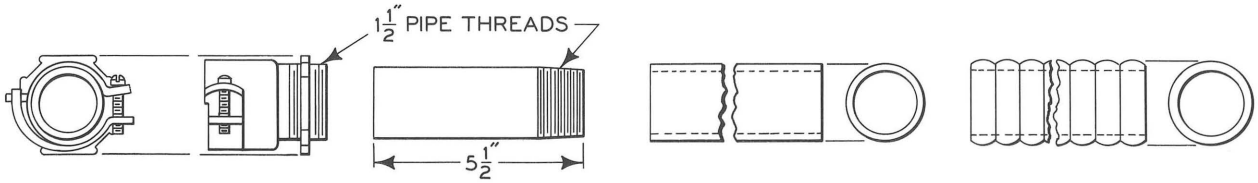

D-COUPLING E-PIPE NIPPLE F-CONDUIT G-CONDUIT

Accessories for Electric Switchman.

TYPICAL LAYOUT For ELECTRIC SWITCHMAN

Order by catalog number and name shown in bold type

NAME	CATALOG NUMBER	
	With fitting D, pg. 54 for 1 1/2" flex. conduit	With nipple E, pg. 54 for 1 7/8" rubber conduit
ELECTRIC SWITCHMAN LAYOUT COMPLETE, without heater. (Trailable) with switch adjustment bracket for connection to a vertical switch rod	A85-802	A85-803
As above, except with heater	A85-804	A85-806
Note: The above layouts include the following: Electric Switchman Throw rod, Ref. A, page 54 Hold down kit, Ref. B, page 54 Switch Adjustment Bracket, Catalog Section 91, page 7, Ref. E		

NAME	CATALOG NUMBER
ELECTRIC SWITCHMAN, only, without heater, fits layout above	A85-816
As above, except with heater	A85-817

ACCESSORIES For ELECTRIC SWITCHMAN

Order by catalog number and name shown in bold type

REF.	NAME	CATALOG NUMBER
A	THROW ROD, with two lock nuts	A85-851
B	HOLD-DOWN KIT, for 8", 9" or 10" ties, consists of 3 threaded rods 3/4" x 14", complete with all necessary angle and lock washers and nuts	A85-856
*C	HAND CRANK, consists of 15" ratchet handle wrench with 1/2" square drive and 1-1/2" long, 7/8" hex. socket	A85-860
D	COUPLING, 1-1/2" pipe thread for 1-1/2" flexible conduit	A85-866
E	PIPE NIPPLE, 1-1/2" pipe thread for 1-7/8" I. D. rubber conduit . .	A85-867
F	CONDUIT, 1-7/8" I. D., solid rubber, length 3'	A85-520
G	CONDUIT, 1-1/2" flexible, length 3'	A85-868
1	PIN, for use with throw rod	P85-939

*Commercial item.

Memoranda

CATALOG SECTION 87

HAND-OPERATED SWITCH MACHINES

Model 9

CONTENTS

	Page
Detector Bars	8
Integral Locking Machines	5
Lamp Tip	8
Latch Stand	6
Lock Rods	8
Lugs	6
Separately Controlled Locking Machines	5
Target Staffs	8
Wire Entrance Couplings and Conduit	6
General Description	2

GENERAL RAILWAY SIGNAL COMPANY

A UNIT OF GENERAL SIGNAL CORPORATION

ROCHESTER, NEW YORK

PRINTED IN U.S.A.

December 1965

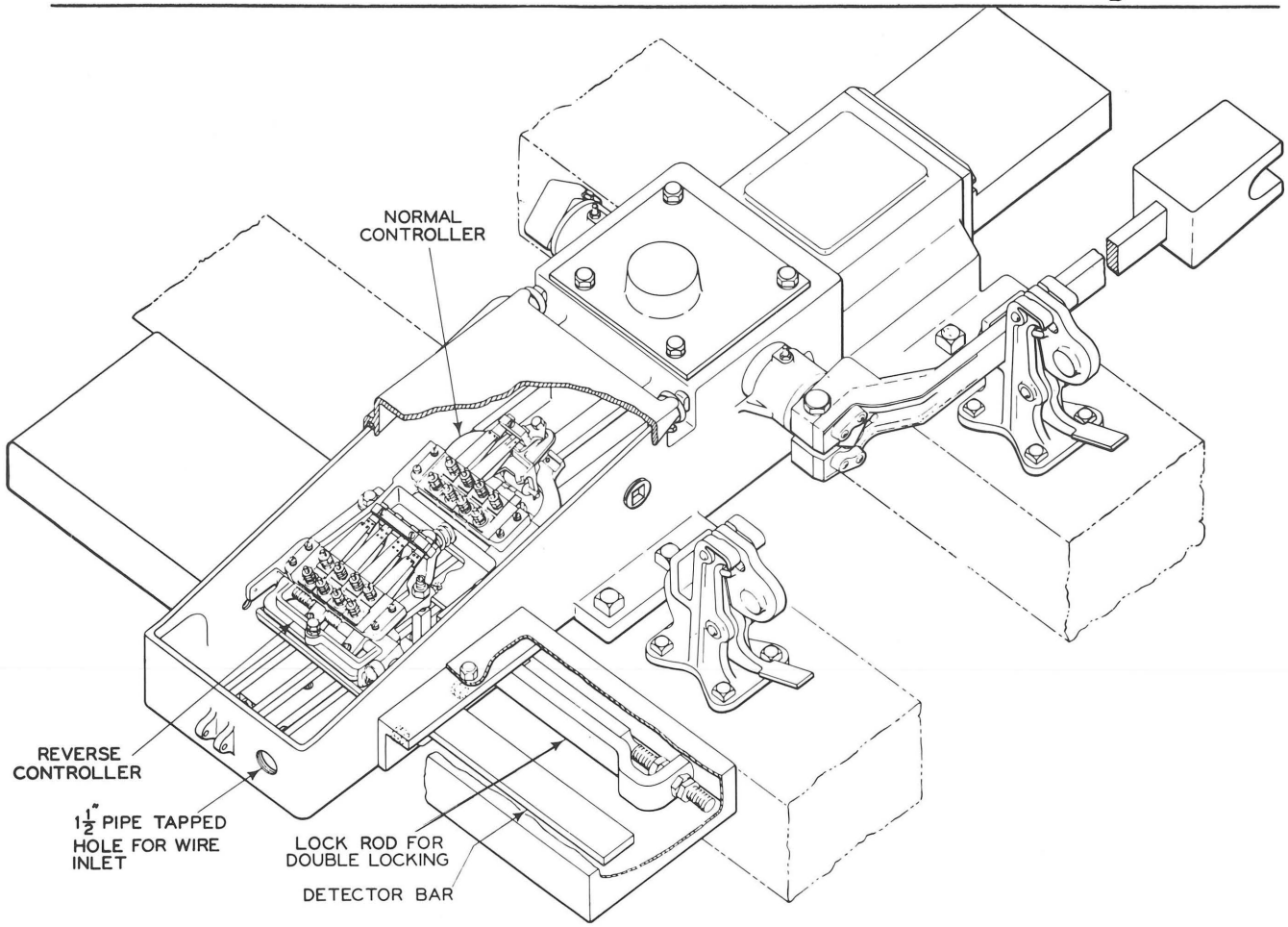

GENERAL DESCRIPTION

MODEL 9 HAND-OPERATED SWITCH MACHINES

The GRS Model 9 hand-operated switch machine is described in detail in Bulletin 182. Operation, installation, and maintenance are covered in Handbook 32.

A Model 10 electric switch lock is easily applied to the machine. Order separately from Catalog Section 50.

Machines are furnished without target staff. A domed cap covers the upper end of the throw crank shaft. A collar is attached to this shaft by a pin. Either low or high target staff may be added to any machine by removing the cap, pin, and collar and replacing these with target staff assembly complete, which includes drive coupling and driven coupling for proper target alignment.

Wire entrance is through a 1-1/2" pipe-tapped hole on the circuit controller end of the machine.

All circuit controllers leave the factory assembled with two normally open and two normally closed contacts. Any pair of contact fingers may be arranged open or closed in the "up" position of the rocker (or in the "down" position) as circuits require.

INTEGRAL LOCKING MACHINES

An integral locking machine is one in which the locking plunger is driven directly by the hand-throw lever.

SEPARATELY-CONTROLLED LOCKING MACHINES

In a machine with separately-controlled locking, a mechanical linkage from a distant point moves the locking plunger. When the locking plunger is in its normal position, it locks the hand-throw lever as well as the lock rod. Thus you cannot operate such a machine until a previous action unlocks it. Machines with separately-controlled locking lock in the normal position only.

A typical application of these machines would be, for example, an electrically locked crossover where the switch on the one end could not be operated until after the electrically locked switch on the other end had been operated. Hence, electric lock protection would be provided by only one electric lock.

RIGHT-HAND OR LEFT-HAND MACHINES

Model 9 switch machines may be ordered for either right- or left-hand installation, on the open- or closed-point side. (A right-hand machine, for example, is one located on the right-hand side of the track when facing the switch points). Machines may also be altered in the field, but this may require different lock rods or detector bars (for details see Handbook 32).

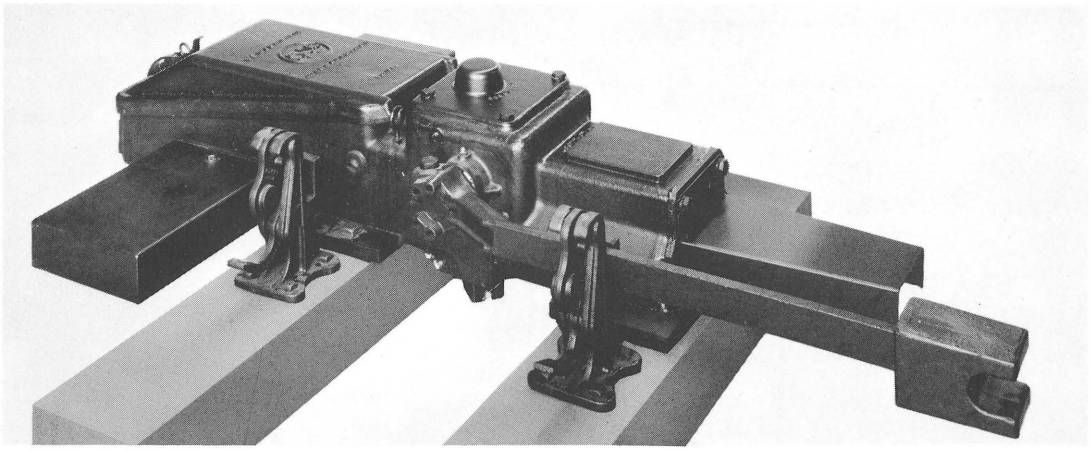

MODEL 9 HAND-OPERATED SWITCH MACHINE

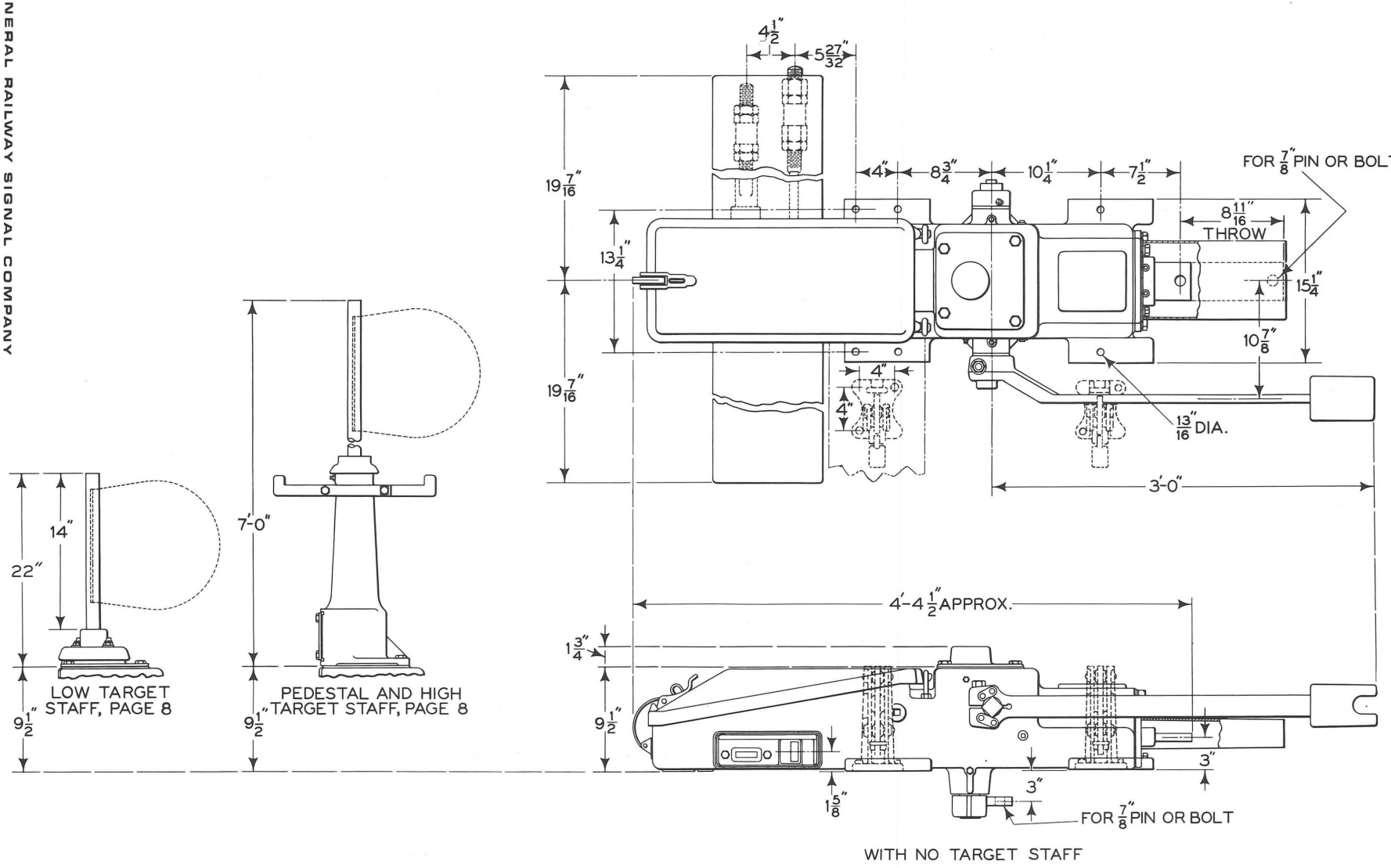

Model 9 hand-operated switch machine.

MODEL 9 SWITCH MACHINES WITH INTEGRAL LOCKING

To order, specify "Model 9 Switch Machine", giving catalog number. Your choice of lugs A through F, page 6 are included with each machine. Please specify lug choices by catalog numbers.

MACHINE LAYOUT	POINT POSITION	LOCK ROD	CONTROLLER	CATALOG NUMBER
R. H.	Closed	Single	Normal	A87-101
L. H.	Open	Single	Normal	A87-102
R. H.	Open	Single	Normal	A87-103
L. H.	Closed	Single	Normal	A87-104
R. H.	Closed	Single	Normal and Reverse	A87-105
L. H.	Open	Single	Normal and Reverse	A87-106
R. H.	Open	Single	Normal and Reverse	A87-107
L. H.	Closed	Single	Normal and Reverse	A87-108
R. H.	Closed	Double-adjustable	Normal and Reverse	A87-111
L. H.	Open	Double-adjustable	Normal and Reverse	A87-112
R. H.	Open	Double-adjustable	Normal and Reverse	A87-113
L. H.	Closed	Double-adjustable	Normal and Reverse	A87-114
R. H.	Closed	Double-adjustable	Normal	A87-115
L. H.	Open	Double-adjustable	Normal	A87-116
R. H.	Open	Double-adjustable	Normal	A87-117
L. H.	Closed	Double-adjustable	Normal	A87-118

MODEL 9 SWITCH MACHINES WITH SEPARATELY – CONTROLLED LOCKING

To order, specify "Model 9 Switch Machine", giving catalog number. Your choice of lugs A through F, page 6 are included with each machine. Please specify lug choices by catalog numbers.

MACHINE LAYOUT	POINT POSITION	LOCK ROD	CONTROLLER	CATALOG NUMBER
R. H.	Closed	Single	Normal	A87-121
L. H.	Open	Single	Normal	A87-122
R. H.	Open	Single	Normal	A87-123
L. H.	Closed	Single	Normal	A87-124

ORDER THE FOLLOWING ITEMS, SEPARATELY, AS NEEDED:

1 - Latch stands, page 6
2 - Wire entrance couplings and conduit, page 6
3 - Target staffs, page 8
4 - Lamp tip, page 8

See Catalog Section 91 for lock- and point-detector connecting rods, throw rods, derail connecting rods and terminal junction boxes.

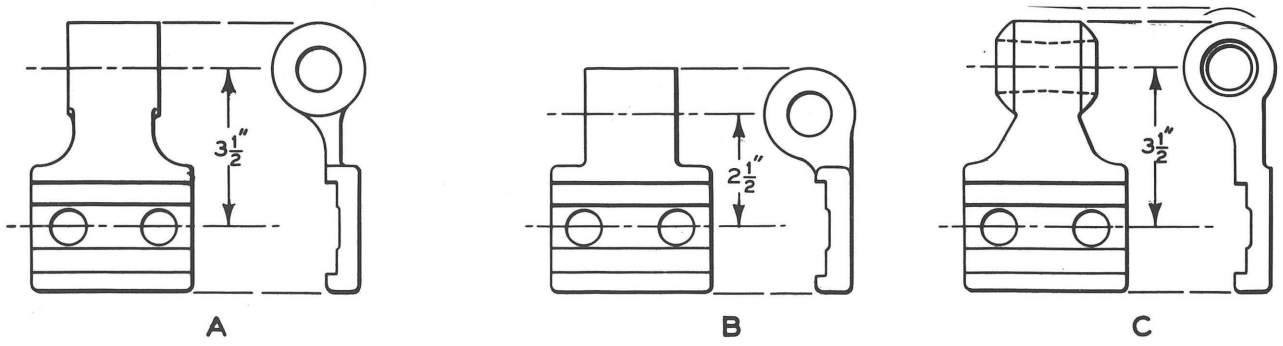

LOCK ROD LUGS

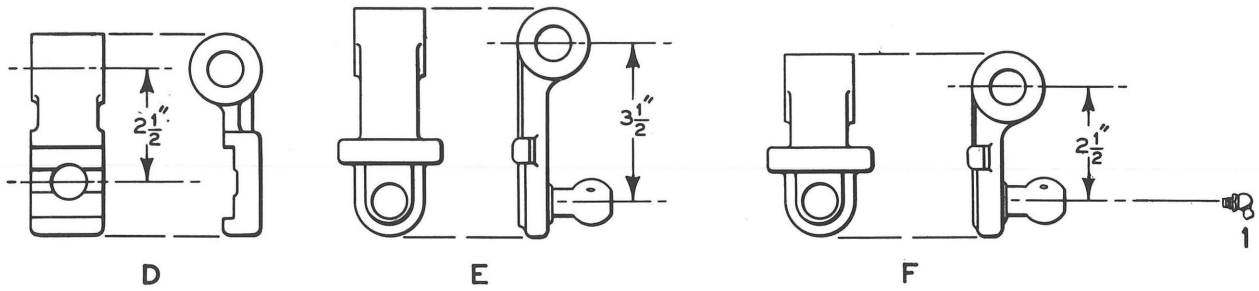

DETECTOR BAR LUGS

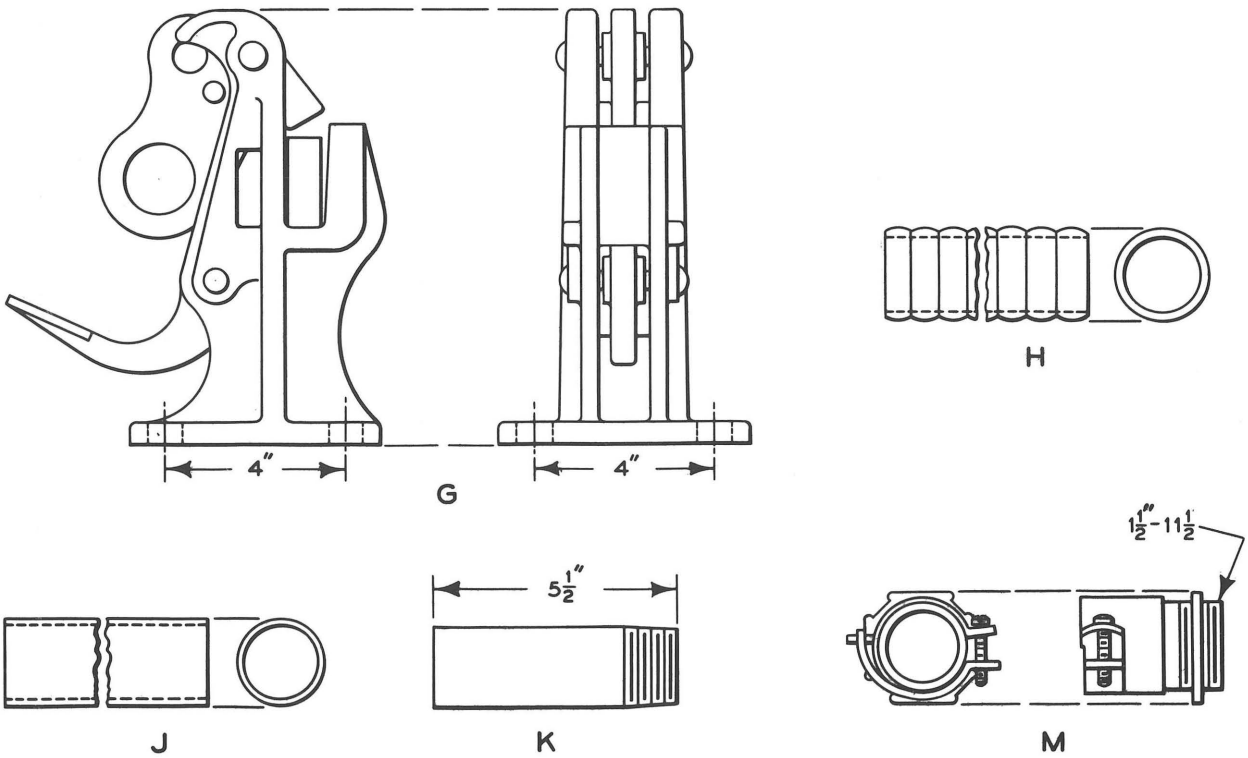

Accessories for Model 9 switch machine.

ACCESSORIES FOR MODEL 9 SWITCH MACHINES

Order by catalog number and name shown in bold type

REF.	NAME	CATALOG NUMBER
	THE FOLLOWING ITEMS ARE FURNISHED WITH MACHINES LISTED ON PAGE 5, BUT ARE SHOWN HERE FOR YOUR SELECTION OF ONE LOCK ROD LUG AND ONE DETECTOR BAR LUG.	
A	LUG, 3-1/2" spacing, for 1" dia. lock rod.	A85-560
B	LUG, 2-1/2" spacing, for 1" dia. lock rod.	A85-561
C	LUG, 3-1/2" spacing, swivel type, for 1" dia. lock rod, includes cup nuts.	A85-562
D	LUG, 2-1/2" spacing, for 1" dia. detector bar	A87-179
E	LUG, 3-1/2" spacing, for 1" dia. detector bar	A87-181
F	LUG, 2-1/2" spacing, for 1" dia. detector bar	A87-185
	THE FOLLOWING ITEMS ARE NOT FURNISHED WITH MACHINES LISTED ON PAGE 5 AND SHOULD BE ORDERED SEPARATELY AS NEEDED.	
G	LATCH STAND COMPLETE, for hand-throw lever . . . . . Two required for machines without electric locking. One required for machines having normal electric locking only.	A87-191
H	CONDUIT, 1-1/2" flexible, length 3'	A85-868
J	CONDUIT, 1-7/8" I. D., solid rubber, length 3'	A85-520
K	PIPE NIPPLE, 1-1/2" pipe thread for 1-7/8" I. D. rubber conduit	A85-867
M	COUPLING, 1-1/2" pipe thread for 1-1/2" flexible conduit	A85-866
1	GREASE FITTING, for detector lugs.	P87-101

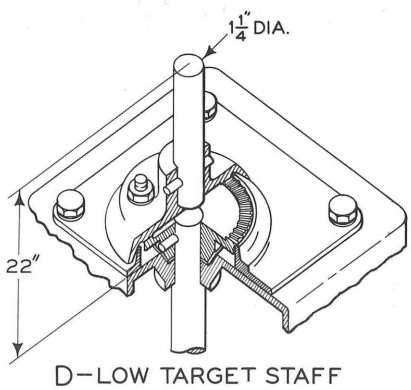

D–LOW TARGET STAFF

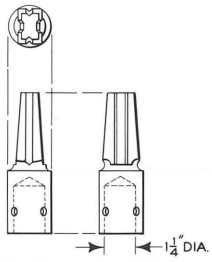

G–LAMP TIP

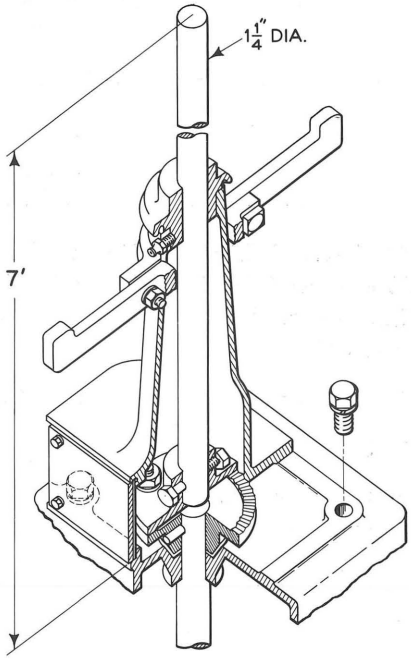

E–HIGH TARGET STAFF

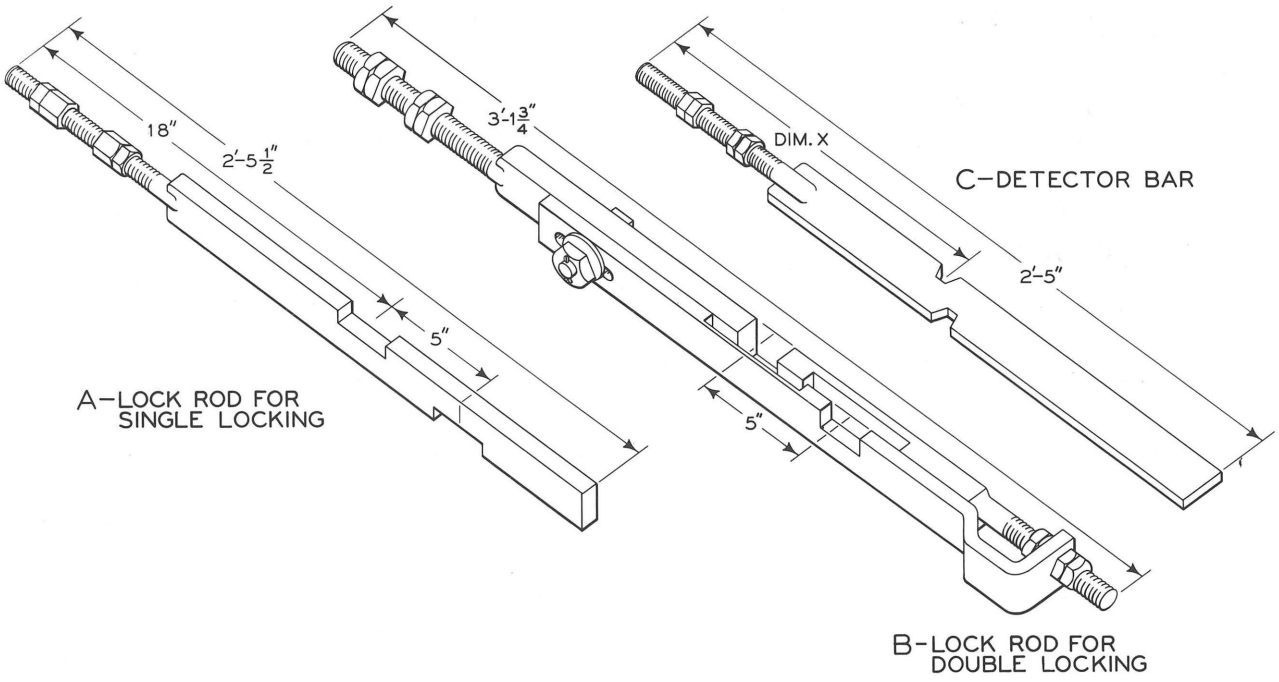

A–LOCK ROD FOR SINGLE LOCKING

C–DETECTOR BAR

B–LOCK ROD FOR DOUBLE LOCKING

Target Staffs, lamp tip, lock rods and detector bars for Model 9 switch machine.

MODEL 9 SWITCH MACHINE
TARGET STAFFS, LOCK RODS AND DETECTOR BARS

Order by catalog number and name shown in bold type

REF.	NAME	CATALOG NUMBER
	NOTE: LOCK RODS AND DETECTOR BARS ARE FURNISHED WITH MACHINES LISTED ON PAGE 5, BUT ARE SHOWN HERE FOR THE PURPOSE OF CONVERTING A MACHINE FROM RIGHT-HAND TO LEFT-HAND.	
A	LOCK ROD, for single locking; reversible, for either open or closed point side. Order lug from page 6	A87-230
B	LOCK ROD, for double locking; for left-hand machine with left-hand point normally closed, has total adjustment of 4" to 6". Order lug from page 6	A87-231
B1	LOCK ROD, for double locking; as above, except for machine with left-hand point normally open. Order lug from page 6	A87-232
B2	LOCK ROD, for double locking; for right-hand machine with right-hand point normally closed; has total adjustment of 4" to 6". Order lug from page 6.	A87-233
B3	LOCK ROD, for double locking; as above, except for machine with right-hand point normally open. Order lug from page 6. . . .	A87-234
C	DETECTOR BAR, for closed point side; for right- or left-hand layout. Dimension "X" = 17". Order lug from page 6	A87-239
C1	DETECTOR BAR, for open point side; for right- or left-hand layout. Dimension "X" = 22". Order lug from page 6	A87-241
	NOTE: THE FOLLOWING ITEMS ARE NOT FURNISHED WITH MACHINES LISTED ON PAGE 5 AND SHOULD BE ORDERED SEPARATELY AS NEEDED.	
D	LOW TARGET STAFF complete, 1-1/4" dia., not drilled for target or lamp tip. Includes drive and driven couplings and all necessary hardware.	A87-250
E	HIGH TARGET STAFF complete, 1-1/4" dia., not drilled for target or lamp tip. Includes drive and driven couplings, pedestal, and all necessary hardware. May be shortened in the field as desired	A87-253
G	LAMP TIP, for low or high target staffs, complete with bolt, nut and washer	A87-259

Memoranda

CATALOG SECTION 91

Switch and Pipeline Fittings

CONTENTS

	Page
Compensators, Cranks and Stands	2
Front Rods, hinged	14
Front Rods, rigid	16 & 18
Insulation Sets	4-6-10
Junction Terminal Box	13
Lug Bolts, Nuts and Washers	22
Pipe and Pipe Carriers	4
Plunger Lock	19
Rods, detector	10
Rods, insulated	4
Rods, lock rod connecting	6
Rods, screw jaw	4
Rods, solid jaw	4 & 6
Rods, switch circuit controller	10
Rods, tang end	4
Roller Bearings	20
Screw Jaws	4-10
Switch Adjustment Brackets	6
Switch Point Lugs	10

GENERAL RAILWAY SIGNAL COMPANY

ROCHESTER, NEW YORK

Printed in U. S. A.

A1577

March 1963

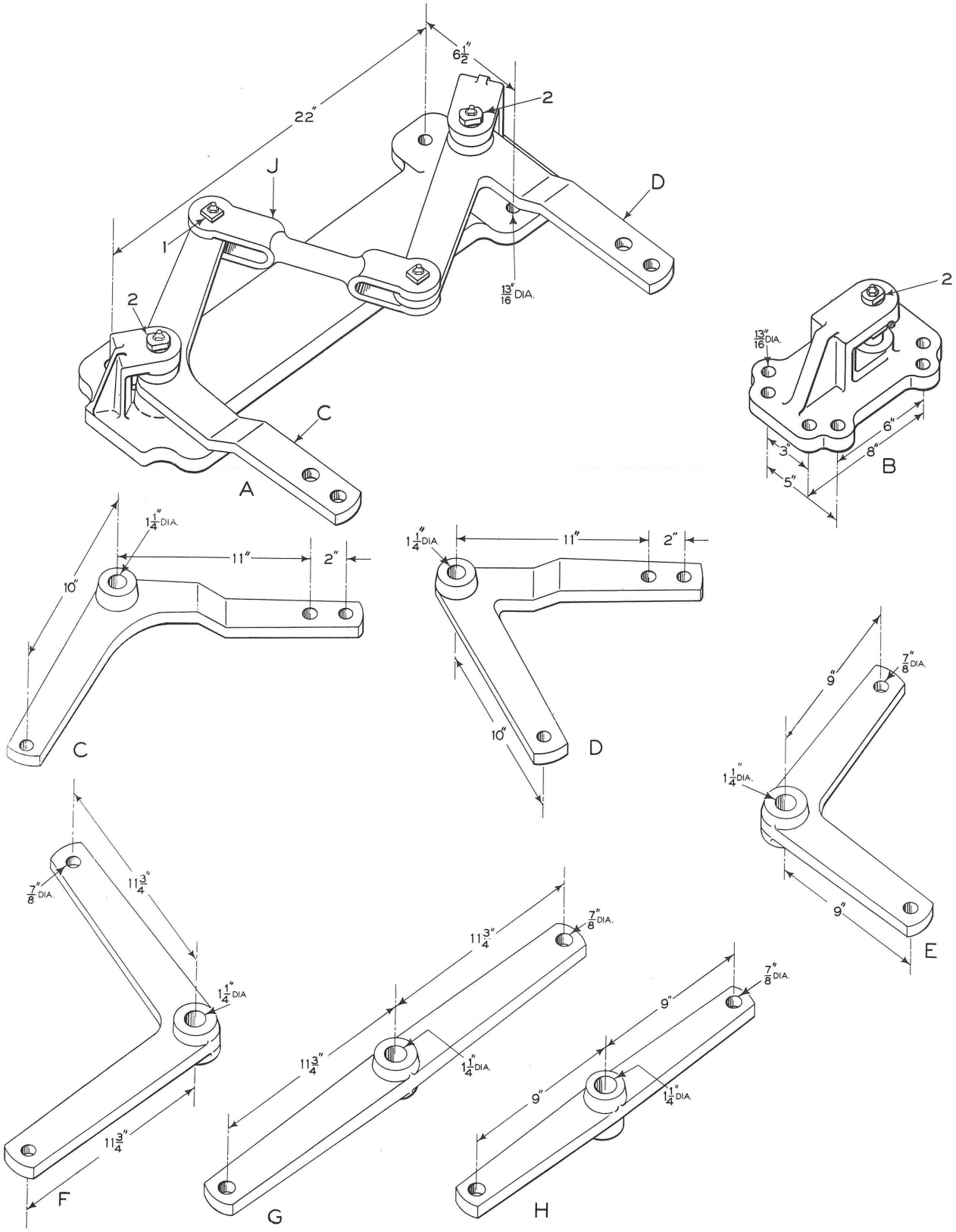

Pipeline fittings

PIPELINE FITTINGS

Order by catalog number and name shown in bold type

REF.	NAME	CATALOG NUMBER
A	**Compensator, Pipe,** one way, with 10″ x 11″–13″ cranks	A91-100
B	**Crank Stand,** horizontal, with 1¼″ dia. pin	A91-101
C	**Crank,** obtuse angle, 10″ x 11″–13″	A91-102
D	**Crank,** acute angle, 10″ x 11″–13″	A91-103
E	**Crank,** right angle, 9″ x 9″	A91-104
F	**Crank,** right angle, 11¾″ x 11¾″	A91-105
G	**Compensator,** straight arm, 11¾″ x 11¾″	A91-106
H	**Compensator,** straight arm, 9″ x 9″	A91-107
J	**Link,** connecting, 11″ centers	A91-108
1	**Pin,** ⅞″ dia., x 2¼″ long, with cotter and grease fitting	P91-100
1A	**Pin** only	P91-101
2	**Pin,** 1¼″ dia., x 5″ long, with cotter and grease fitting	P91-102
2A	**Pin** only	P91-103

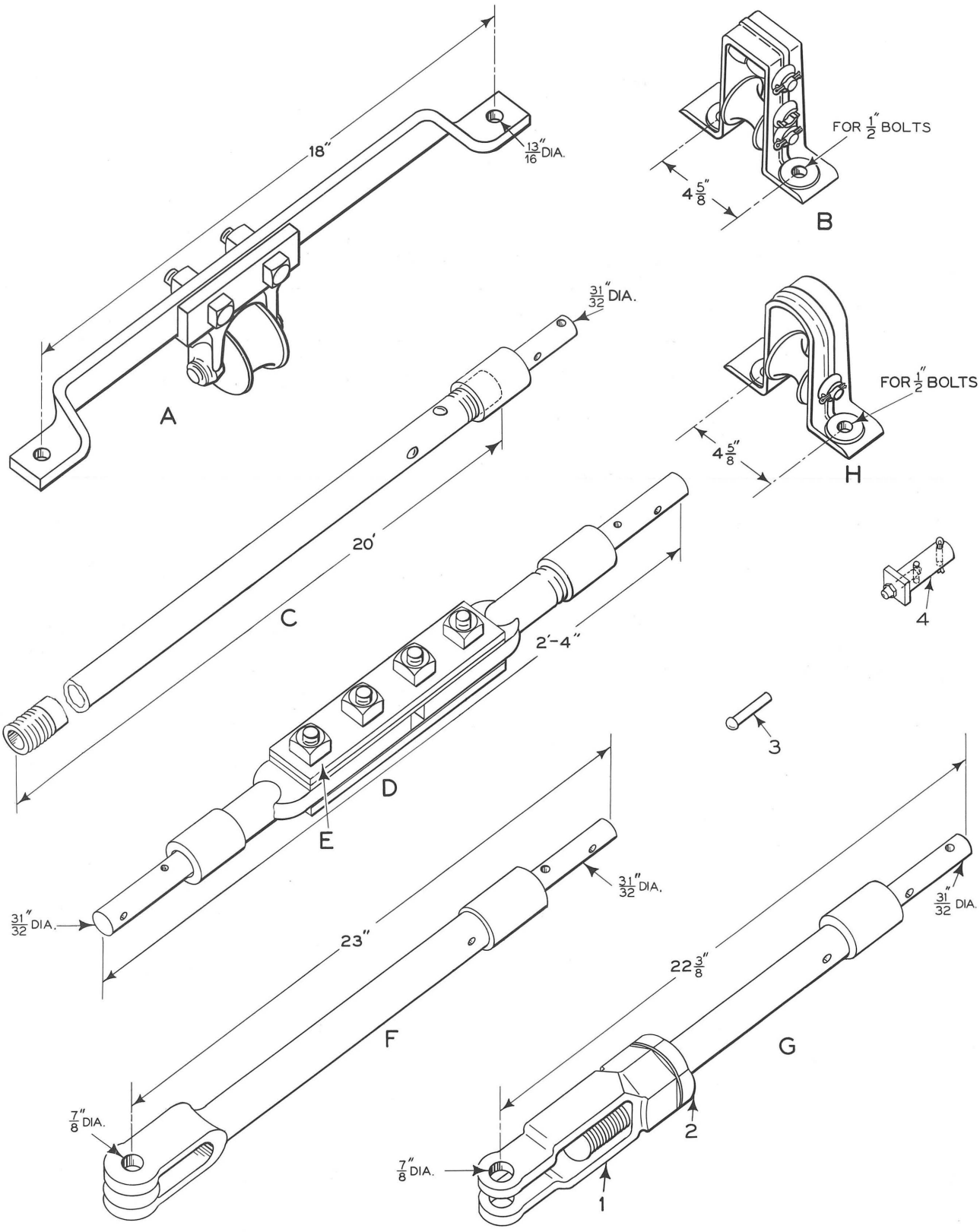

Pipeline fittings

PIPELINE FITTINGS

Order by catalog number and name shown in bold type

REF.	NAME	CATALOG NUMBER
A	**Pipe Carrier,** one way	A91-120
B	**Pipe Carrier,** one way, with double rollers	A91-121
C	**Pipe,** 1″ galvanized, 21′ long, with plug 10″ long, four holes, with rivets and coupling	A91-122
D	**Insulated Rod,** 1¼″, two tanged ends for 1″ pipe	A91-123
E	**Insulation Set,** includes top and bottom insulating and connecting plates, bushings, bolts, nuts and lock washers	A91-124
F	**Solid Jaw Rod,** 1¼″, tanged for 1″ pipe	A91-125
G	**Screw Jaw Rod,** tanged for 1″ pipe	A91-126
H	**Pipe Carrier,** one way, with single roller	A91-130
1	**Screw Jaw** only, 1¼″	P91-110
*2	**Nut,** 1¼″ – 7 x ¾″ thick, American std. heavy hex	P91-123
3	**Rivet,** ¼″ x 1 11/16″ rd. hd.	P91-112
4	**Pin,** ⅞″ dia., x 2¼″ long, with cotter and grease fitting	P91-100
4A	**Pin,** only	P91-101

* Commercial item.

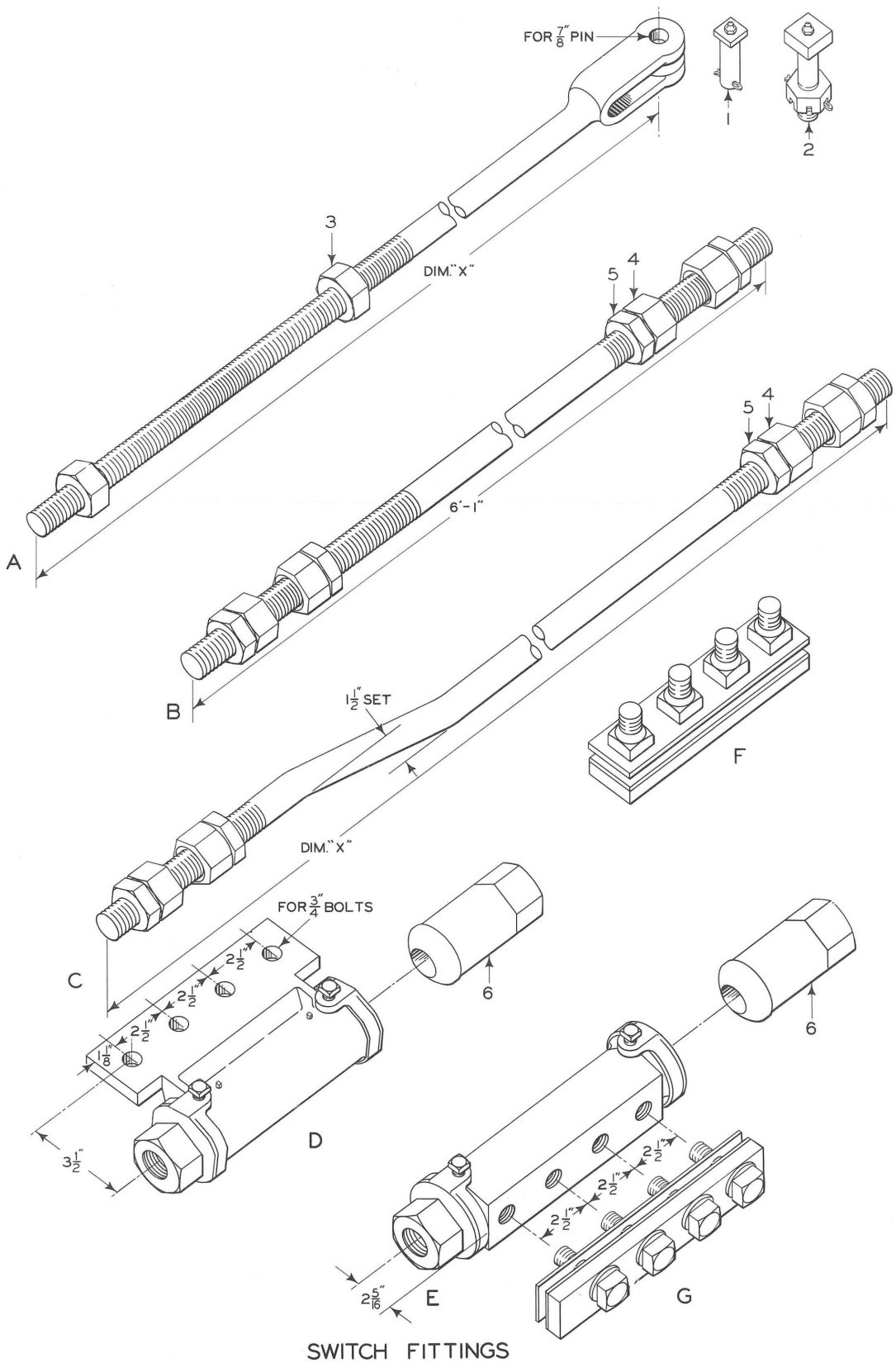

SWITCH FITTINGS

Memoranda

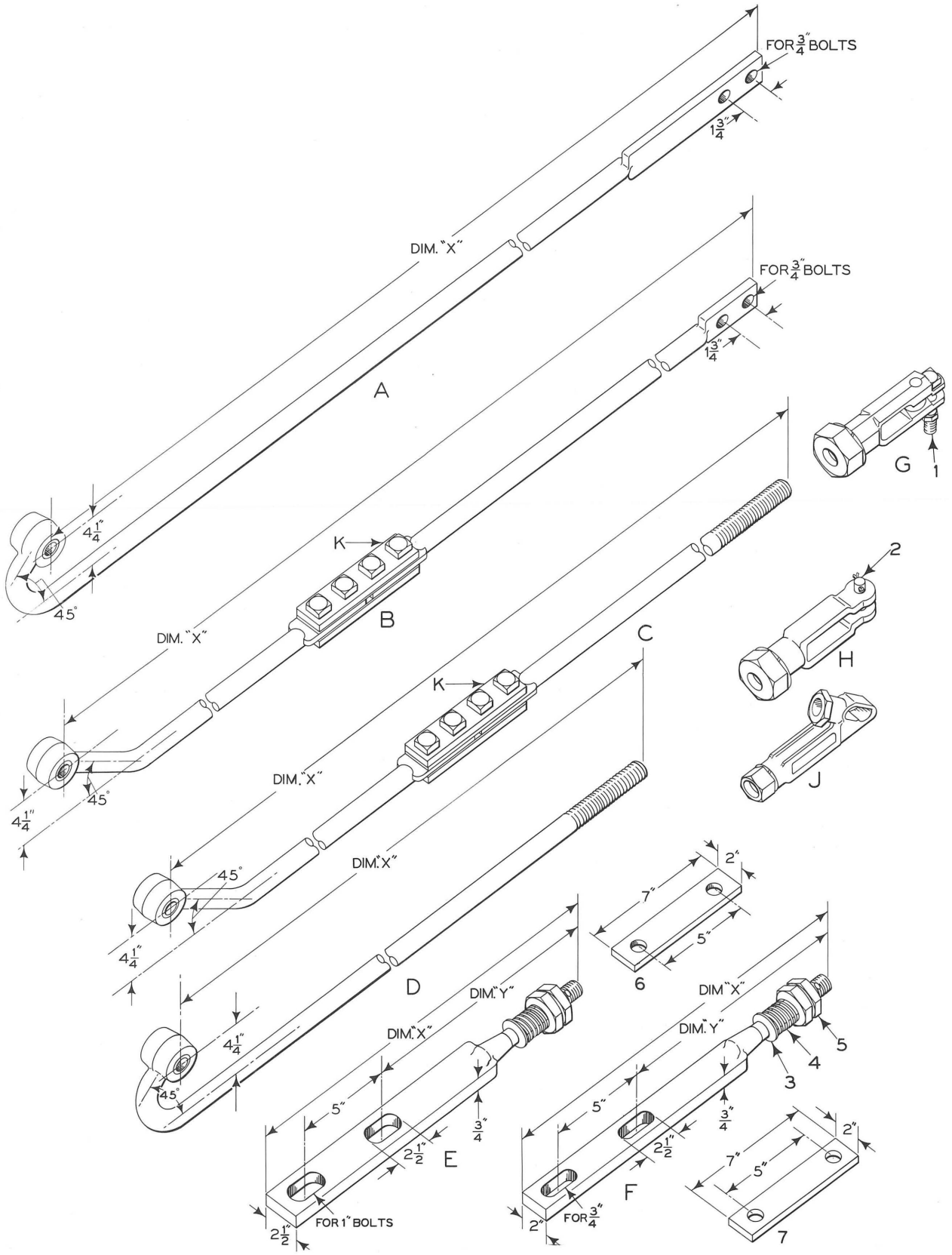

Point Detector Connecting Rods,
Switch Circuit Controller Rods and Jaws,
Point Lugs

POINT DETECTOR CONNECTING RODS, SWITCH CIRCUIT CONTROLLER RODS AND JAWS, POINT LUGS

Order by catalog number and name shown in bold type

REF.	NAME	CATALOG NUMBER
A	POINT DETECTOR CONNECTING ROD, 1" dia., with tapered bushing, Dim. "X" = 3' 0"	A91-160
A1	As above, except Dim. "X" = 3' 8"	A91-161
A2	Same as Ref. A, except Dim. "X" = 3' 11"	A91-162
A3	Same as Ref. A, except Dim. "X" = 6' 1"	A91-163
A4	Same as Ref. A, except Dim. "X" = 6' 7"	A91-164
B	POINT DETECTOR CONNECTING ROD, 1" dia., insulated, with tapered bushing, Dim. "X" = 6' 4"	A91-170
B1	As above, except Dim. "X" = 6' 8 1/2"	A91-171
B2	Same as Ref. B, except Dim. "X" = 7' 0"	A91-172
B3	Same as Ref. B, except Dim. "X" = 7' 2 1/2"	A91-173
B4	Same as Ref. B, except Dim. "X" = 7' 8 1/2"	A91-174
B5	Same as Ref. B, except Dim. "X" = 7' 10"	A91-175
B6	Same as Ref. B, except Dim. "X" = 8' 9"	A91-176
C	SWITCH CIRCUIT CONTROLLER ROD, 1" dia., insulated, with tapered bushing, Dim. "X" = 7' 6"	A91-181
C1	As above, except Dim. "X" = 9' 6"	A91-182
D	SWITCH CIRCUIT CONTROLLER ROD, 1" dia., with tapered bushing, Dim. "X" = 2' 10"	A91-190
D1	As above, except Dim. "X" = 3' 4"	A91-191
D2	Same as Ref. D, except Dim. "X" = 3' 10"	A91-192
E	POINT LUG, 3/4" x 2 1/2" Dim. "X" = 15 3/4"; Dim. "Y" = 8 7/8", for rods having tapered bushings	A91-200
E1	As above, except Dim. "X" = 18 1/2" Dim. "Y" = 11 5/8"	A91-201
E2	Same as Ref. E except Dim. "X" = 21 1/4"; Dim. "Y" = 14 3/8" . . .	A91-202
E3	Same as Ref. E, except Dim. "X" = 24 1/4"; Dim. "Y" = 17 3/8" . .	A91-203
E4	Same as Ref. E except Dim. "X" = 17 1/8"; Dim. "Y" = 10 1/4" . . .	A91-450
E5	Same as Ref. E except Dim. "X" = 19 7/8"; Dim. "Y" = 13"	A91-451
E6	Same as Ref. E except Dim. "X" = 22 3/4"; Dim. "Y" = 15 7/8" . . .	A91-452
E7	Same as Ref. E except Dim. "X" = 20 1/2"; Dim. "Y" = 13 5/8" . . .	A91-453

(Continued on following page)

POINT DETECTOR CONNECTING RODS, SWITCH CIRCUIT CONTROLLER RODS AND JAWS, POINT LUGS

Order by catalog number and name shown in bold type

REF.	NAME	CATALOG NUMBER
F	POINT LUG, 3/4" x 2", for rods having tapered bushings, Dim. "X" 15 3/4"; Dim. "Y" = 8 7/8"	A91-207
F1	As above, except Dim. "X" = 18 1/2"; Dim. "Y" = 11 5/8"	A91-208
F2	Same as Ref. F, except Dim. "X" = 21 1/4"; Dim. "Y" = 14 3/8" . .	A91-209
F3	Same as Ref. F, except Dim. "X" = 24 1/4"; Dim. "Y" = 17 3/8" . .	A91-210
F4	Same as Ref. F, except Dim. "X" = 17 1/8"; Dim. "Y" = 10 1/4" . .	A91-460
F5	Same as Ref. F, except Dim. "X" = 19 7/8"; Dim. "Y" = 13".	A91-461
F6	Same as Ref. F, except Dim. "X" = 22 3/4"; Dim. "Y" = 15 7/8". . .	A91-462
F7	Same as Ref. F, except Dim. "X" = 20 1/2"; Dim. "Y" = 13 5/8". . .	A91-463
G	SCREW JAW, 1", with jam nut and lock washer, for ball pin	A91-215
H	SCREW JAW, 1", with jam nut, lock washer and pin	A91-216
J	SOCKET, 1" with jam nut and lock washer	A91-217
K	INSULATION SET, includes insulating and splice plates, bushings, 1/2" x 2 1/4" bolts, nuts and washers	A91-220
1	BOLT, 1/2" - 13 x 2 1/4" sq. hd., with hex. nut, lock washer and cotter	P91-140
2	PIN, 5/8" dia., x 1 13/16" sq. hd., with cotter	P91-141
3	WASHER, for spring	P91-142
4	SPRING	P91-143
*5	NUT, 1" -8 x 9/16" thick, American std., heavy hex., jam.	P91-144
6	PLATE WASHER, A.A.R. dwg. 125511, 5" spacing for 1" bolts . . .	P91-145
7	PLATE WASHER, A.A.R. dwg. 125512, 5" spacing for 3/4" bolts . .	P91-146

* Commercial item.

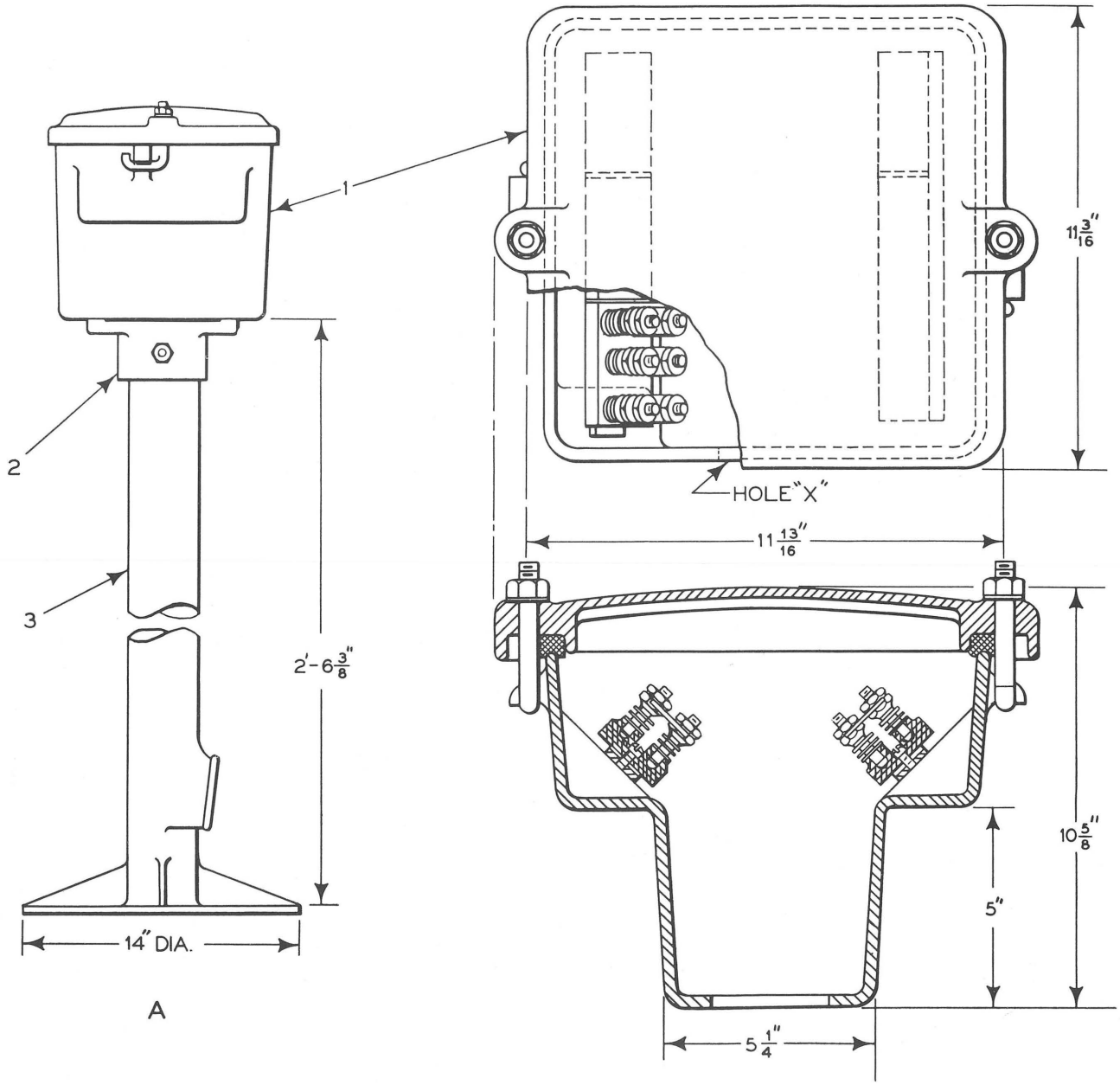

JUNCTION TERMINAL BOX

Order by catalog number and name shown in bold type

REF.	NAME	CATALOG NUMBER
A	**Junction Terminal Box,** with pedestal, has 36 terminal posts, hole "X" for 2" conduit	A91-230
1	**Junction Terminal Box** only, has 36 terminal posts, hole "X" for 2" conduit	A91-231
2	**Adapter,** for 3½" pipe	A91-232
3	**Pedestal,** 3½" pipe, with base	A91-233

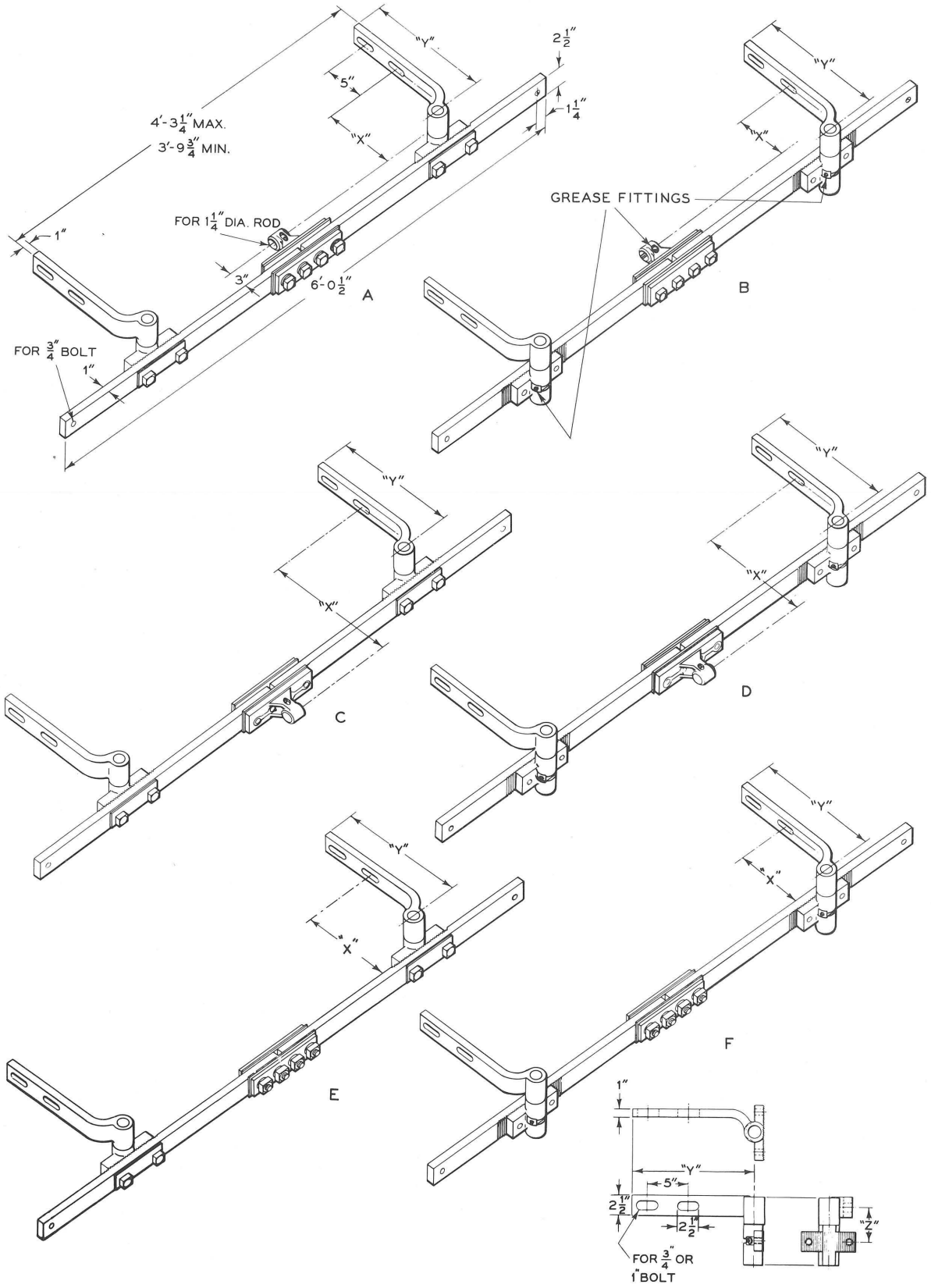

Front rods—hinged type

FRONT RODS—HINGED TYPE

Insulated, Adjustable

Order by catalog number and name

REF.	DIM. "Y"	DIM. "X"	DIM. "Z"	CATALOG NUMBER FOR 1" MOUNTING BOLTS	CATALOG NUMBER FOR 3/4" MOUNTING BOLTS
A	13-1/8"	3-1/2" to 5"	4-1/4"	A91-330	A91-340
A1	13-1/8"	3-1/2" to 5"	5-3/16"	A91-331	A91-341
A2	15-1/8"	5-1/2" to 7"	4-1/4"	A91-332	A91-342
A3	15-1/8"	5-1/2" to 7"	5-3/16"	A91-333	A91-343
B	13-1/8"	1/2" to 2"	4-1/4"	A91-350	A91-360
B1	13-1/8"	1/2" to 2"	5-3/16"	A91-351	A91-361
B2	15-1/8"	2-1/2" to 4"	4-1/4"	A91-352	A91-362
B3	15-1/8"	2-1/2" to 4"	5-3/16"	A91-353	A91-363
C	13-1/8"	10-1/2" to 12"	4-1/4"	A91-370	A91-380
C1	13-1/8"	10-1/2" to 12"	5-3/16"	A91-371	A91-381
C2	15-1/8"	12-1/2" to 14"	4-1/4"	A91-372	A91-382
C3	15-1/8"	12-1/2" to 14"	5-3/16"	A91-373	A91-383
D	13-1/8"	7-1/2" to 9"	4-1/4"	A91-390	A91-400
D1	13-1/8"	7-1/2" to 9"	5-3/16"	A91-391	A91-401
D2	15-1/8"	9-1/2" to 11"	4-1/4"	A91-392	A91-402
D3	15-1/8"	9-1/2" to 11"	5-3/16"	A91-393	A91-403
E	13-1/8"	6-1/2" to 8"	4-1/4"	A91-410	A91-420
E1	13-1/8"	6-1/2" to 8"	5-3/16"	A91-411	A91-421
E2	15-1/8"	8-1/2" to 10"	4-1/4"	A91-412	A91-422
E3	15-1/8"	8-1/2" to 10"	5-3/16"	A91-413	A91-423
F	13-1/8"	3-1/2" to 5"	4-1/4"	A91-430	A91-440
F1	13-1/8"	3-1/2" to 5"	5-3/16"	A91-431	A91-441
F2	15-1/8"	5-1/2" to 7"	4-1/4"	A91-432	A91-442
F3	15-1/8"	5-1/2" to 7"	5-3/16"	A91-433	A91-443

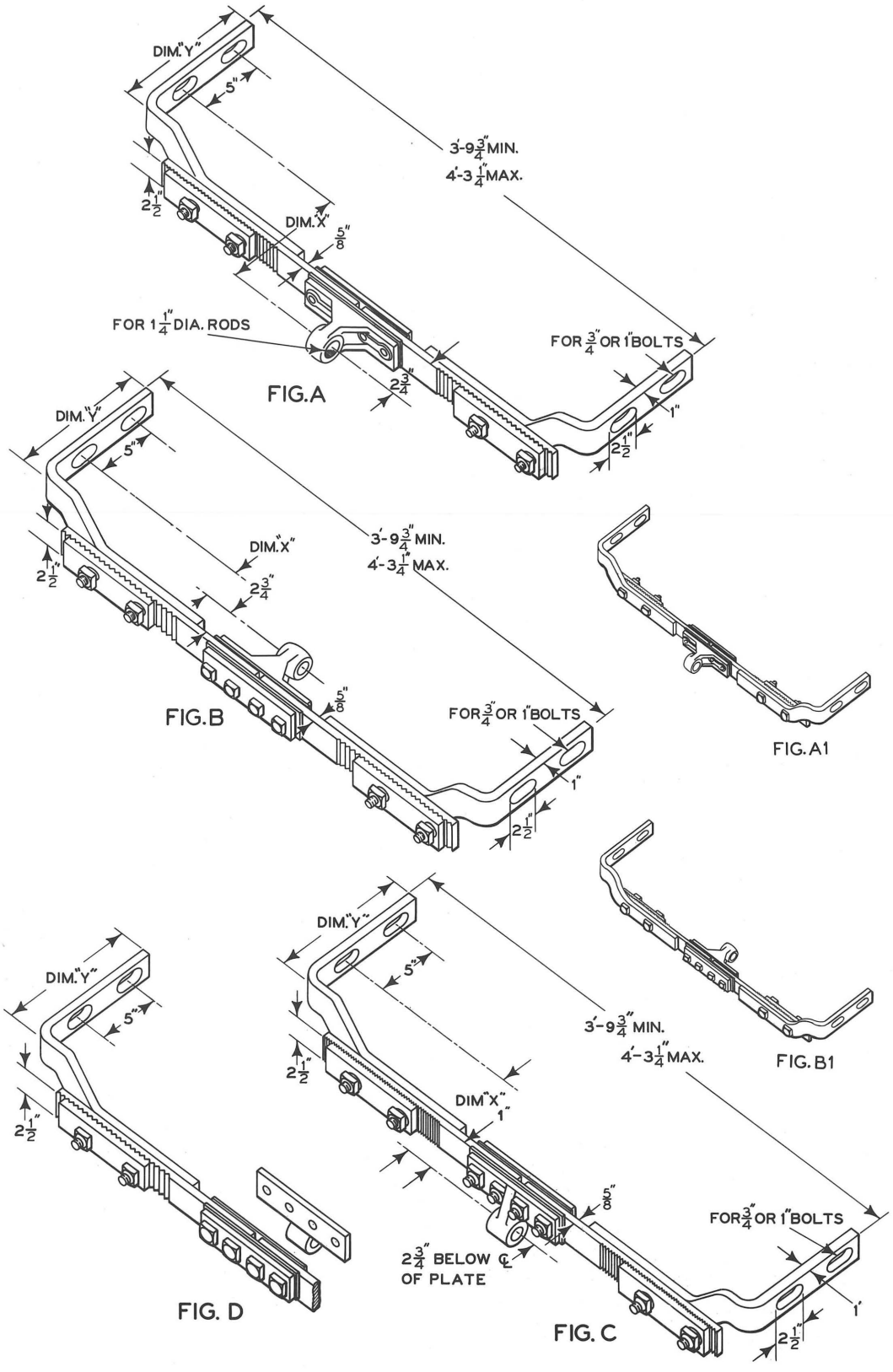

Front rods—rigid type

FRONT RODS—RIGID TYPE

Insulated, Adjustable

Order by catalog number and name

WITH STRAIGHT LUG AND ASSEMBLED AS PER FIG. A

DIM. "Y"	DIMENSION "X"		CATALOG NUMBER	
	As Shipped	Reassembled in Field as Per Fig. A1	For 1" Mounting Bolts	For 3/4" Mounting Bolts
11 1/2"	7 1/8" to 8 5/8"	5 1/2" to 7"	A91-260	A91-262
13 1/2"	9 1/8" to 10 5/8"	7 1/2" to 9"	A91-261	A91-263

WITH STRAIGHT LUG AND ASSEMBLED AS PER FIG. B

DIM. "Y"	DIMENSION "X"		CATALOG NUMBER	
	As Shipped	Reassembled in Field as Per Fig. B1	For 1" Mounting Bolts	For 3/4" Mounting Bolts
11 1/2"	1" to 2 1/2"	7/8"	A91-270	A91-272
13 1/2"	3" to 4 1/2"	1 3/8" to 2 7/8"	A91-271	A91-273

WITH DOWNSET LUG AND ASSEMBLED AS PER FIG. C

DIM "Y"	DIMENSION "X"		CATALOG NUMBER	
	As Shipped	Reassembled in Field as Per Fig. A1	For 1" Mounting Bolts	For 3/4" Mounting Bolts
11 1/2"	5 3/8" to 6 7/8"	3 3/4" to 5 1/4"	A91-266	A91-268
13 1/2"	7 3/8" to 8 7/8"	5 3/4" to 7 1/4"	A91-267	A91-269

WITH DOWNSET LUG AND ASSEMBLED AS PER FIG. D

DIM. "Y"	DIMENSION "X"		CATALOG NUMBER	
	As Shipped	Reassembled in Field as Per Fig. B1	For 1" Mounting Bolts	For 3/4" Mounting Bolts
11 1/2"	2 3/4" to 4 1/4"	1 1/8" to 2 5/8"	A91-276	A91-278
13 1/2"	4 3/4" to 6 1/4"	3 1/8" to 4 5/8"	A91-277	A91-279

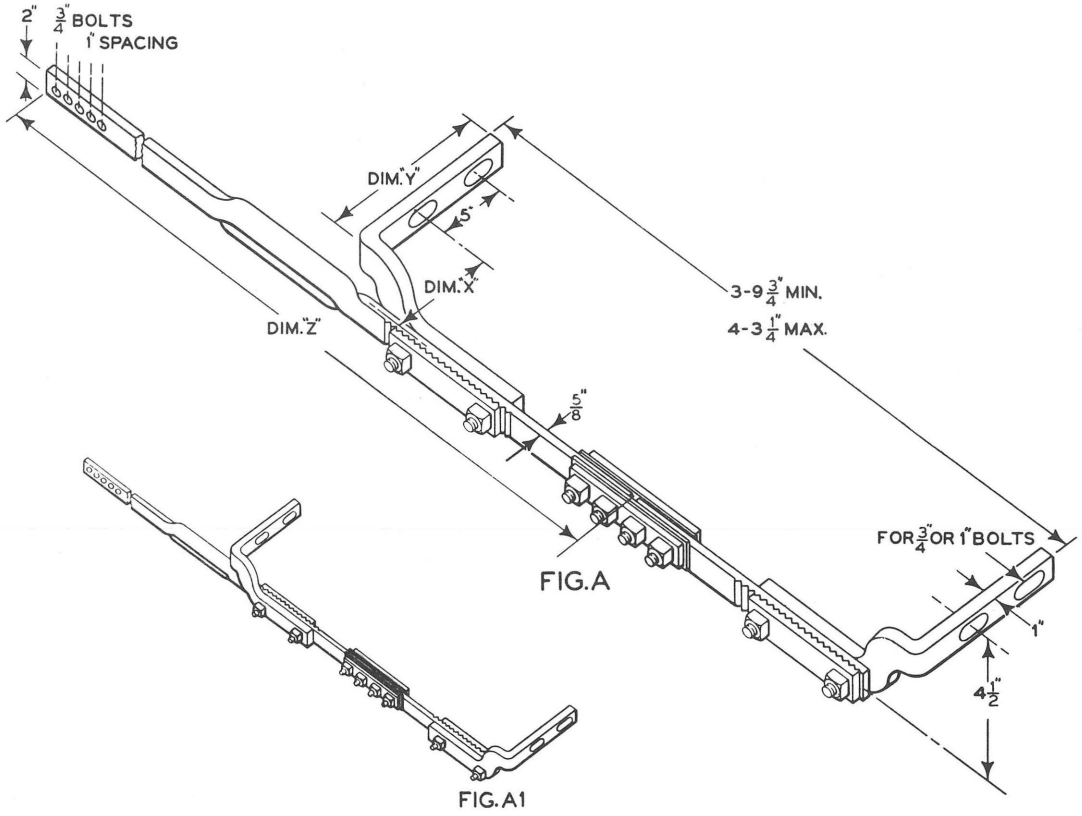

Front rods—rigid type

FRONT RODS–RIGID TYPE

Insulated, Adjustable

With Continuous Lock Rod Connection

ASSEMBLED AS PER FIG. A

DIM. "Z"	DIM. "Y"	DIMENSION "X"		CATALOG NUMBER	
		As Shipped	Reassembled in Field as Per Fig. A1	For 1" Mounting Bolts	For 3/4" Mounting Bolts
5'-3"	13½"	6 1/16"-7 9/16"	4 7/16"-5 15/16"	A91-280	A91-284
"	11½"	4 1/16"-5 9/16"	2 7/16"-3 15/16"	A91-281	A91-285
3'-11"	13½"	6 1/16"-7 9/16"	4 7/16"-5 15/16"	A91-282	A91-286
"	11½"	4 1/16"-5 9/16"	2 7/16"-3 15/16"	A91-283	A91-287

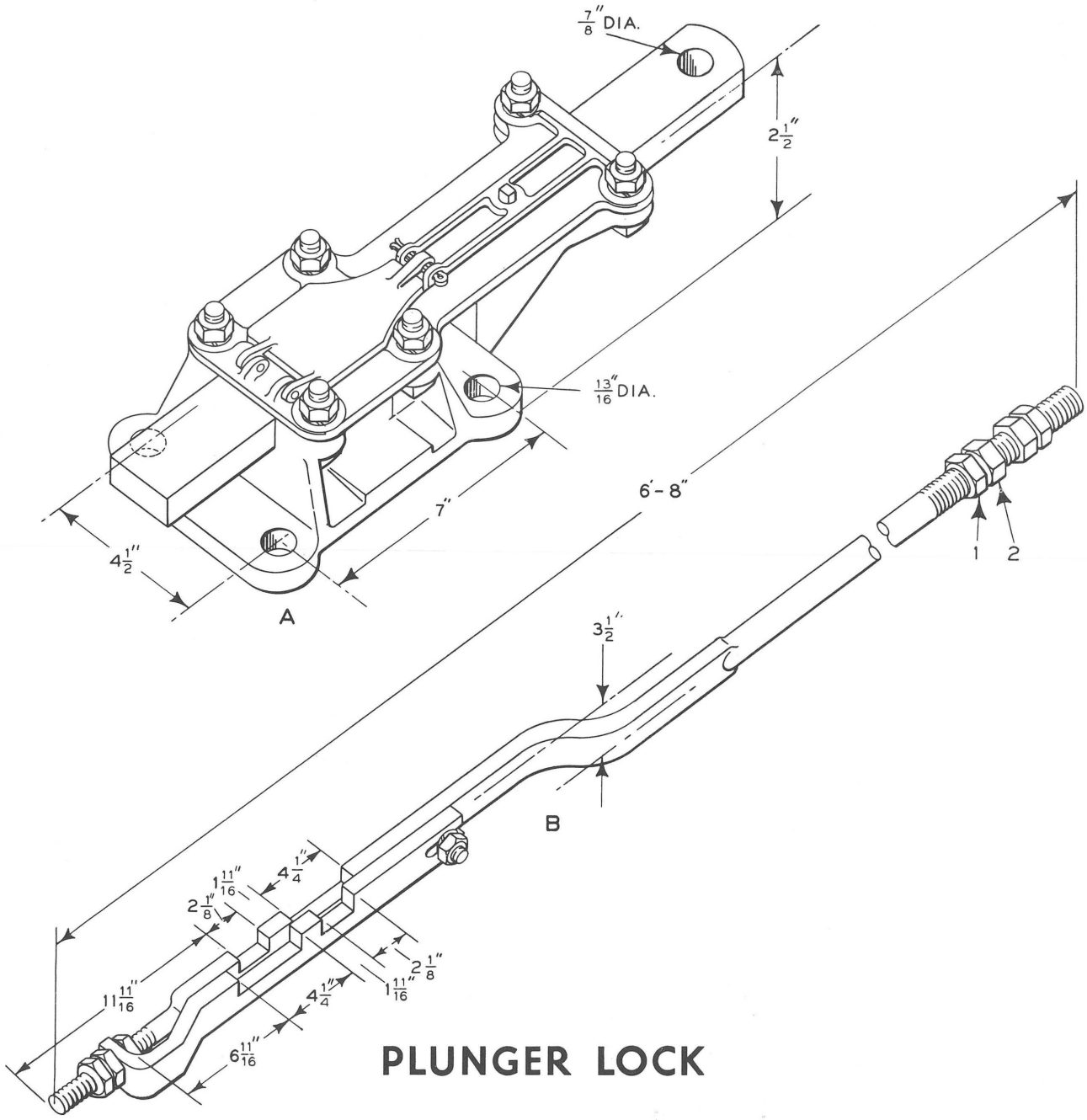

PLUNGER LOCK

Order by catalog number and name shown in bold type

REF.	NAME	CATALOG NUMBER
A	**Plunger-Lock,** for use with rod Ref. B	A91-300
B	**Lock Rod,** 1¼" dia., adjustable	A91-301
*1	**Nut,** 1¼"—7 x ¾" thick, American std., heavy hex	P91-123
2	**Nut,** cup, 1¼"—7 x 1¼" thick, hex.	P91-122

*Commercial item

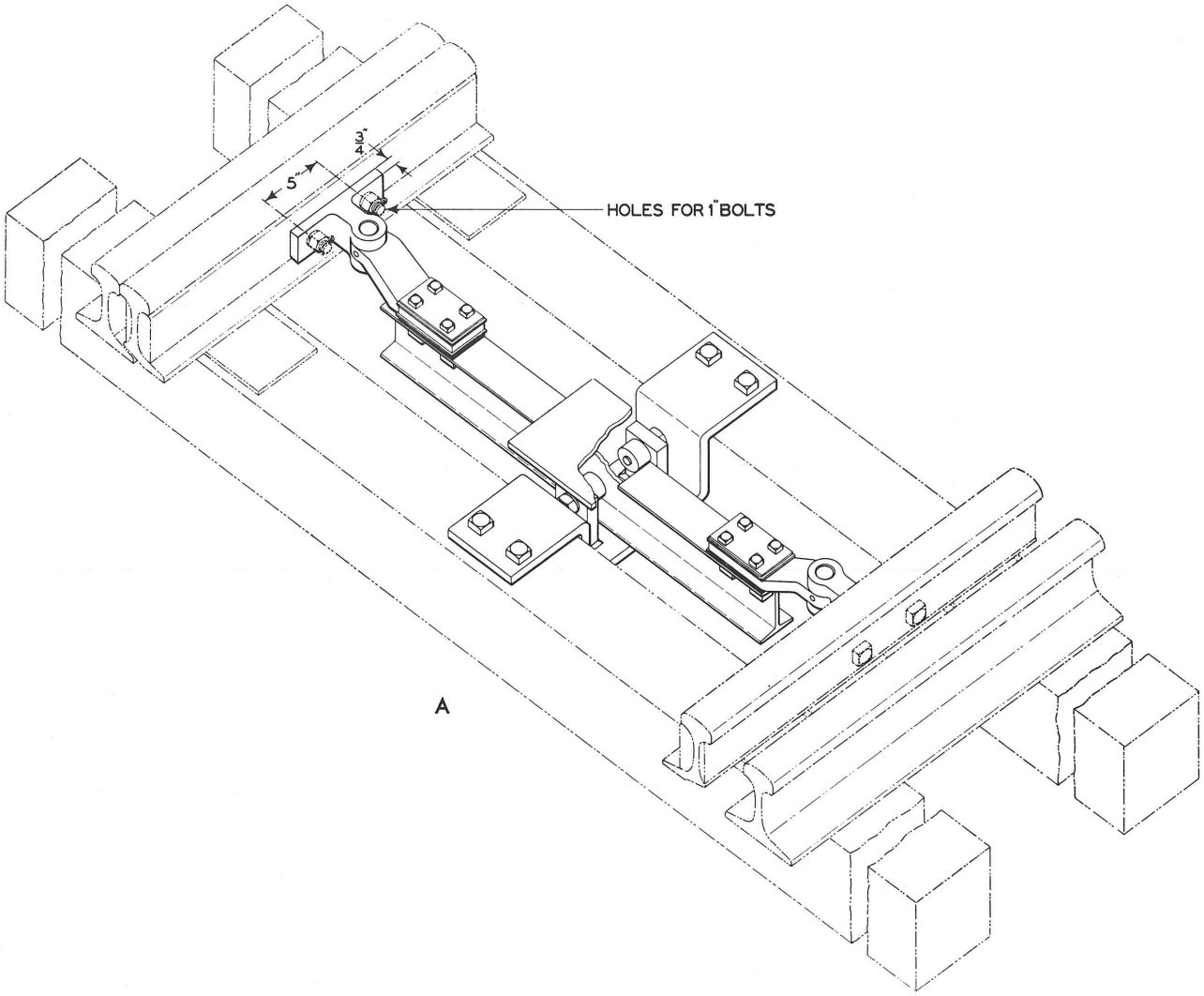

ROLLER BEARINGS

For Application to Switch Points

Order by catalog number and name shown in bold type

REF.	NAME	CATALOG NUMBER
A	**Roller Bearing,** articulated, fits any size rail, does not include bolts for attaching to rails	A91-320

Memoranda

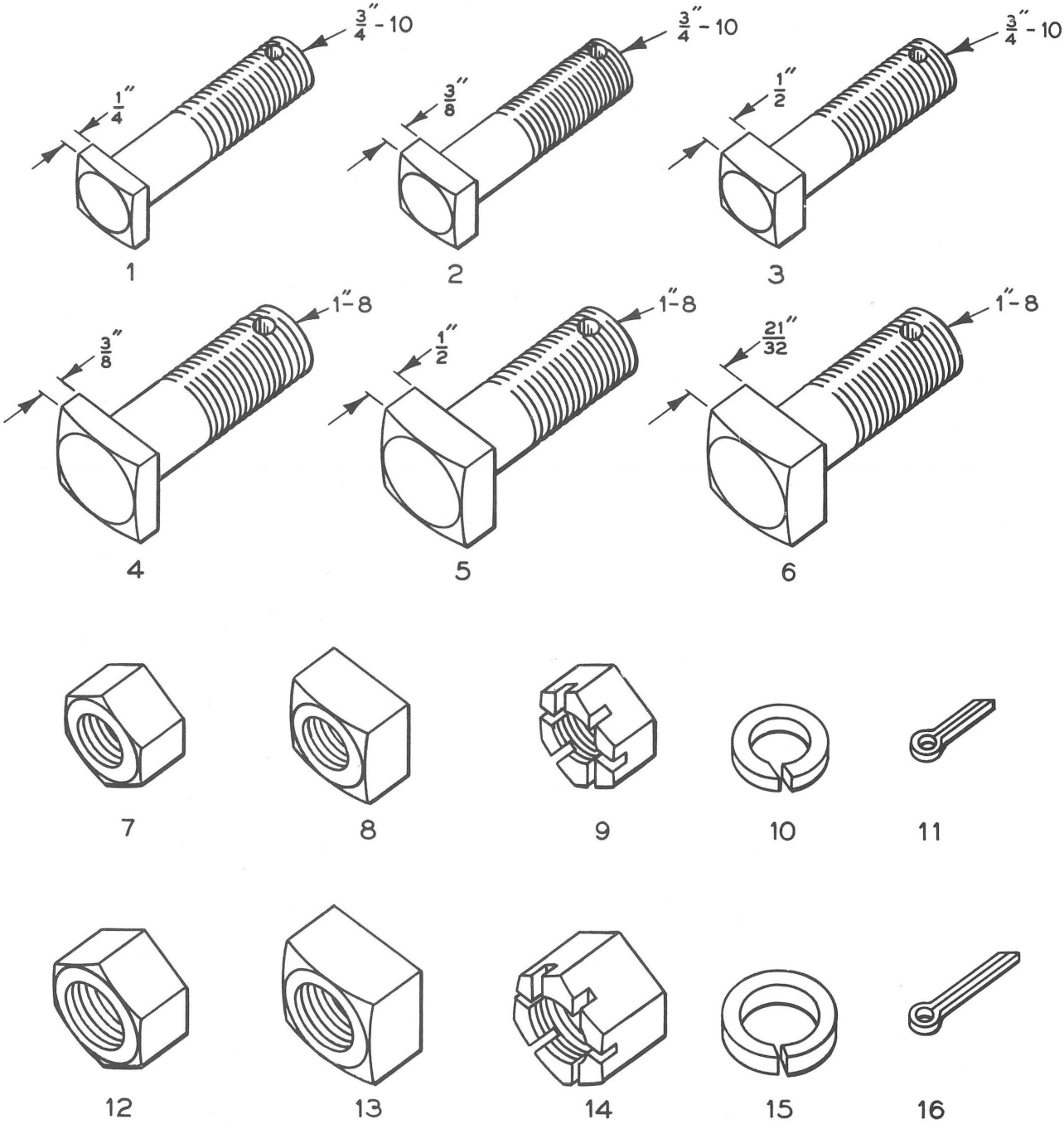

Lug bolts, nuts and washers

LUG BOLTS, NUTS AND WASHERS

Order by catalog number and name

REF.	SIZE	THICKNESS OF HEAD	LENGTH UNDER HEAD	CATALOG NUMBER
1	¾″-10	¼″	3½″	P91-160
1a	"	"	4″	P91-161
1b	"	"	4½″	P91-162
1c	"	"	5″	P91-163
1d	"	"	5½″	P91-164
2	"	⅜″	3½″	P91-170
2a	"	"	4″	P91-171
2b	"	"	4½″	P91-172
2c	"	"	5″	P91-173
2d	"	"	5½″	P91-174
3	"	½″	3½″	P91-180
3a	"	"	4″	P91-181
3b	"	"	4½″	P91-182
3c	"	"	5″	P91-183
3d	"	"	5½″	P91-184
4	1″-8	⅜″	3½″	P91-190
4a	"	"	4″	P91-191
4b	"	"	4½″	P91-192
4c	"	"	5″	P91-193
4d	"	"	5½″	P91-194
5	"	½″	3½″	P91-200
5a	"	"	4″	P91-201
5b	"	"	4½″	P91-202
5c	"	"	5″	P91-203
5d	"	"	5½″	P91-204
6	"	21/32″	3½″	P91-210
6a	"	"	4″	P91-211
6b	"	"	4½″	P91-212
6c	"	"	5″	P91-213
6d	"	"	5½″	P91-214

(Continued on following page)

LUG BOLTS, NUTS AND WASHERS

Order by catalog number and name shown in bold type

REF.	NAME	CATALOG NUMBER
* 7	**Nut,** ¾″—10, American std., heavy hex.	P91-220
* 8	**Nut,** ¾″—10, American std., heavy square	P91-221
* 9	**Nut,** ¾″—10, American std., semi-finished, regular hex., slotted	P91-222
*10	**Lock Washer,** ¾″	P91-223
*11	**Cotter,** for ¾″ sq. and hex. nuts Refs. 7 and 8	P91-224
*11a	As above, except for ¾″ slotted nut Ref. 9	P91-225
*12	**Nut,** 1″—8, American std., heavy hex.	P91-226
*13	**Nut,** 1″—8, American std., heavy square	P91-227
*14	**Nut,** 1″—8, American std., semi-finished, heavy hex., slotted	P91-228
*15	**Lock Washer,** 1″	P91-229
*15a	As above, except 1¼″	P91-230
*16	**Cotter,** for 1″ sq. and hex. nuts Refs. 12 and 13	P91-231
*16a	As above, except for 1″ slotted nut Ref. 14	P91-232

*Commercial items.

CATALOG SECTION 92

GRS
Signal Systems

CONTENTS

	Page
Highway Crossing Protection - with Wired Case	
Single-Track, Non-Signaled	2
Single-Track, Signaled	3
Double-Track, Signaled	4

TOOLS FOR TRANSPORTATION

GENERAL RAILWAY SIGNAL COMPANY

ROCHESTER, NEW YORK

Printed in U. S. A.

October 1960

HIGHWAY CROSSING PROTECTION
with WIRED CASE
(Industrial Plants or Non-Signalled Railroad)

This plate provides ordering references for the proper size case completely wired and equipped for typical locations as illustrated, in which all crossing circuits are internal in the case. See general information below for items that are and are not provided.

Refer to tabulation and specify Highway Crossing Protection and give catalog number.

GENERAL INFORMATION

Cases are supplied for use with:
1. 110 volts, 60 cycles.
2. Two-rail track circuits.

Cases are supplied with:
1. Type K relays.
2. Type K8 Interlocking Relay
3. Transformers, rectifiers, and sundries (wire, aerial cable entrance, tagging, arresters, fuse and terminal blocks, etc.) per GRS practice.
4. Space to house the usual 10-volt operating storage battery. When primary cells are used they are assumed to be housed in separate battery box.

The following apparatus, in addition to case, is included:
1. Two highway crossing signals with crossarm and four type "XC" light units, reflex-reflecting crossbuck and stop sign, and split base per Catalog No. A30-100 or A30-105
2. Test Box, two-way, with two Test Switches, without indicators, per Catalog No. A30-400.
3. Bell, Catalog No. A30-260
4. Type B3VA-102 rectifiers with track connections as required.

Cases are not arranged for any line circuits except a-c. power.

Items not included (but not limited to): batteries, battery boxes, insulated joints, rail bonds, underground cable, line drops, ground rods, foundations, padlocks, bootleg risers or connectors.

Cases, for track cuts, shown in dashed lines and such material as may be required therein are not included but can be furnished.

(See Catalog Sec. 5, page 6, for ordering information on these cases.)

HIGH-SINGLE MODULAR STEEL INSTRUMENT CASE
For details see Catalog Sec. 5.

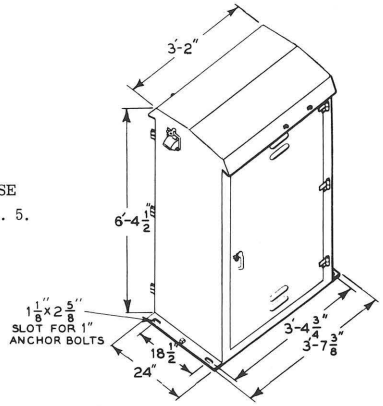

LOW-SINGLE MODULAR STEEL INSTRUMENT CASE
For details see Catalog Sec. 5.

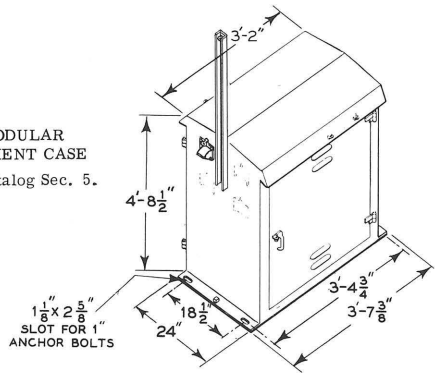

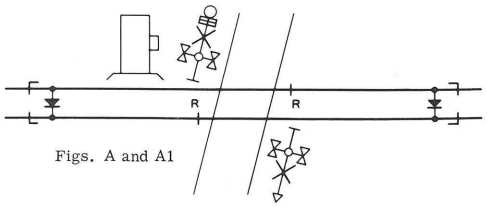

Figs. A and A1

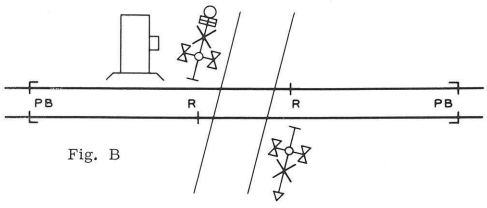

Fig. B

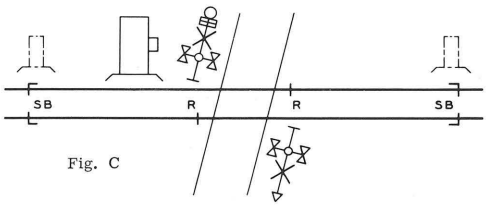

Fig. C

When ordering, specify "Highway Crossing Protection" and give catalog number.

	Fig. A	Fig. A1	Fig. B	Fig. C
CATALOG NO.	A92-500	A92-503	A92-505	A92-507
Case	LS *	HS **	HS **	HS **
Rectified AC Track Circuits with Standby	No	Yes	No	No
Rectified AC Track Circuits without Standby	Yes	No	No	No
Primary Battery Track Circuits	No	No	Yes	No
Storage Battery Track Circuits	No	No	No	Yes
AC Lighting with Storage Battery Standby	No	Yes	Yes	Yes
AC Lighting without Storage Battery Standby	Yes	No	No	No

* = Low-Single Modular Steel Instrument Case
** = High-Single Modular Steel Instrument Case

HIGHWAY CROSSING PROTECTION with WIRED CASE

For Use on Single-Track Equipped with Automatic Signals

This plate provides ordering references for the proper size case completely wired and equipped for typical locations as illustrated, in which all crossing circuits are internal in the case. See general information below for items that are and are not provided.

Refer to tabulation and specify Highway Crossing Protection and give catalog number.

GENERAL INFORMATION

Cases are supplied for use with:

1. 110 volts, 60 cycles.
2. As many as four signal circuits taken through track relay contacts.
3. Two-rail d-c. track circuits.

Cases are supplied with:

1. Directional stick highway control.
2. Relays, transformers, rectifiers, and sundries (wire, connectors, aerial cable entrance, tagging, arresters, fuse and terminal blocks, etc.) per GRS practice.
3. Space to house usual track and operating storage batteries. When primary cells are used they are assumed to be housed in separate battery box.

The following apparatus, in addition to case, is included:

1. Two highway crossing signals with crossarm and four type "XC" light units, reflex-reflecting crossbuck and stop sign, and split base per Catalog No. A30-100 or A30-105
2. Test Box, two way, with two test switches, without indicators, per Catalog No. A30-400.
3. Bell, Catalog No. A30-260

Cases are not arranged for any line circuits except a-c. power and signal circuits.

Items not included (but not limited to): batteries, battery boxes, insulated joints, rail bonds, underground cable, line drops, ground rods, foundations, padlocks, bootleg risers or connectors.

Cases, for track cuts, shown in dashed lines and such materials as may be required therein are not included but can be furnished.

(See Catalog Sec. 5, page 6, for ordering information on these cases.)

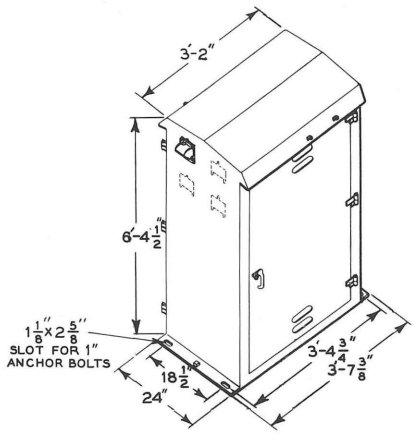

HIGH-SINGLE MODULAR
STEEL INSTRUMENT CASE
For details see Catalog Sec. 5.

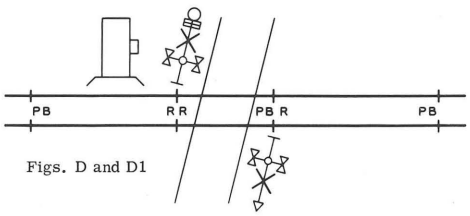

Figs. D and D1

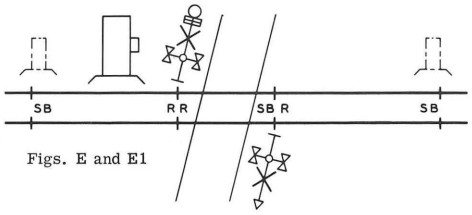

Figs. E and E1

When ordering, specify "Highway Crossing Protection" and give catalog number.

	Fig. D	Fig. D1	Fig. E	Fig. E1
CATALOG NO.	A92-510	A92-513	A92-515	A92-517
Case	HIGH-SINGLE MODULAR STEEL INSTRUMENT CASE			
Primary Battery Track Circuits	Yes	Yes	No	No
Storage Battery Track Circuits	No	No	Yes	Yes
AC Lighting with Storage Battery Standby	Yes	Yes	Yes	Yes
Type B Relays	Yes	No	Yes	No
Type K Relays	No	Yes	No	Yes

HIGHWAY CROSSING PROTECTION with WIRED CASE

For Use on Double-Track Equipped with Automatic Signals

This plate provides ordering references for the proper size cases completely wired and equipped for typical locations as illustrated, in which all crossing circuits are internal in the case. See general information below for items that are and are not provided.

Refer to tabulation and specify Highway Crossing Protection and give catalog number.

GENERAL INFORMATION

Cases are supplied for use with:

1. 110-volts, 60 cycles.
2. As many as four signal circuits (per track) taken through track relay contacts.
3. Two-rail d-c. track circuits.

Cases are supplied with:

1. Directional stick highway control.
2. Relays, transformers, rectifiers, and sundries (wire, connectors, aerial cable entrance, cable support, tagging, arresters, fuse and terminal blocks, etc.) per GRS practice.
3. Space to house usual track and operating storage batteries. When primary cells are used they are assumed to be housed in separate battery box.

The following apparatus, in addition to case, is included:

1. Two highway crossing signals with crossarm and four type "XC" light units, reflex-reflecting crossbuck, 2 track sign and stop sign, and split base per Catalog No. A30-110 or A30-115
2. Test Box, four-way, with four test switches, without indicators, per Catalog No. A30-400.
3. Bell, Catalog No. A30-260

Cases are not arranged for any line circuits except a-c. power and signal circuits.

Items not included (but not limited to): batteries, battery boxes, insulated joints, rail bonds, underground cable, line drops, ground rods, foundations, padlocks, bootleg risers or connectors.

Cases, for track cuts, shown in dashed lines and such material as may be required therein are not included but can be furnished. (See Catalog Sec. 5, page 6, for ordering information on these cases.)

LOW-DOUBLE MODULAR STEEL INSTRUMENT CASE
For details see Catalog Sec. 5.

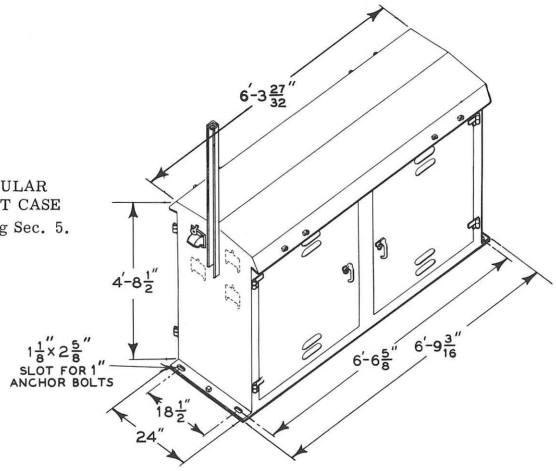

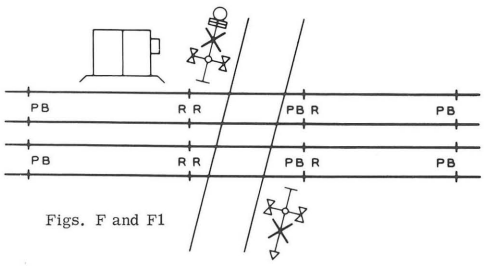

Figs. F and F1

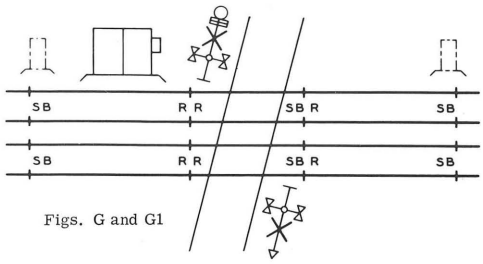

Figs. G and G1

When ordering, specify "Highway Crossing Protection" and give catalog number.

	Fig. F	Fig. F1	Fig. G	Fig. G1
CATALOG NO.	A92-520	A92-523	A92-525	A92-527
Case	LOW-DOUBLE MODULAR STEEL INSTRUMENT CASE			
Primary Battery Track Circuits	Yes	Yes	No	No
Storage Battery Track Circuits	No	No	Yes	Yes
AC Lighting with Storage Battery Standby	Yes	Yes	Yes	Yes
Type B Relays	Yes	No	Yes	No
Type K Relays	No	Yes	No	Yes

CATALOG SECTION 92

GRS
Signal Systems

Overlay Track Circuits

CONTENTS

	Page
Series Overlay	12
Extended Range Series Overlay	14
Island Overlay	16
Approach Overlay	18
Approach Overlay (Replacement only)	22
Coupling Unit	21

GENERAL RAILWAY SIGNAL COMPANY
A UNIT OF GENERAL SIGNAL CORPORATION
ROCHESTER, NEW YORK

PRINTED IN U.S.A.

SERIES OVERLAY TRACK CIRCUIT

GENERAL INFORMATION

The series overlay track circuit equipment operates at a frequency of 10 kilocycles and has a range of approximately 40 feet. It is generally used to obtain the release of outlying switch locks.

The equipment operates on 9 to 14 volts d-c, battery energy or rectified a-c.

Power requirements are as follows:

Input voltage: 9 to 14 volts d-c.

Input current: (at 10 volts d-c): Normal 40 ma; shunted 200 ma.

For operation directly from a rectifier without battery a 50-ohm, 10-watt bleeder resistor must be connected across the input of the transceiver, if the rectifier is presented no load other than the transceiver.

When the overlay track circuit is connected to the rails within 75 feet of the regular d-c track circuit battery connection or the transformer end of an a-c track circuit, a reactor must be used to prevent the battery or the transformer from shunting the overlay track circuit. A different reactor is used for each type of track circuit, a-c or d-c. It is connected in one of the track leads of the regular track circuit.

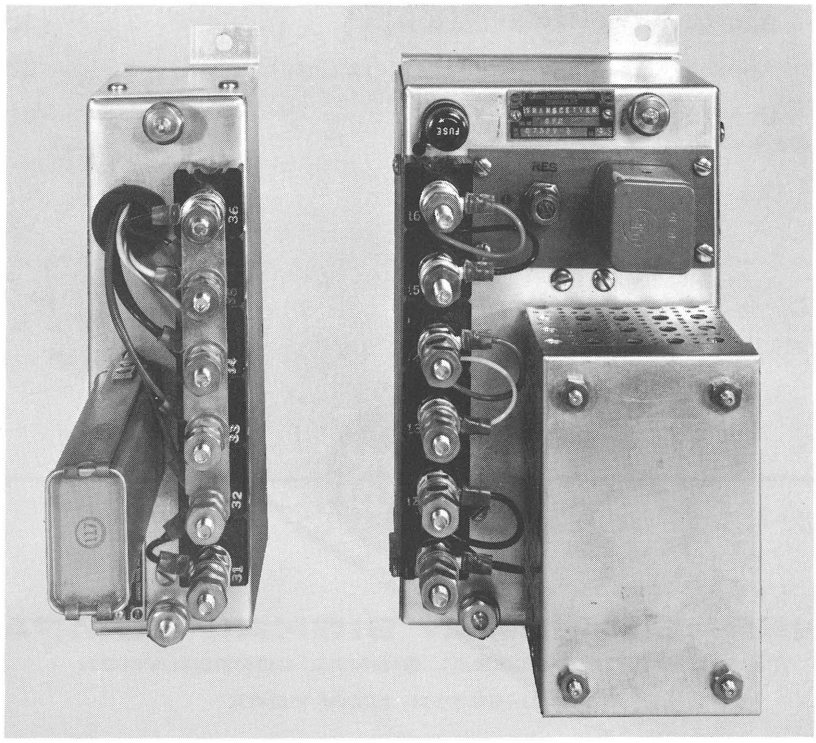

Height - 8"
Width - 2-1/2"
Depth - 7"

A-Tuner

Height - 8"
Width - 5"
Depth - 7"

B-Transceiver

SERIES OVERLAY TRACK CIRCUIT

"Quantity Required" indicates the number needed for one track circuit.

Order by catalog number and name shown in bold type

REF.	NAME	QUANTITY REQUIRED	CATALOG NUMBER
A	TUNER, frequency 10.0 kilocycles. May be wall, shelf, or rack mounted and occupies a Type B1 relay space . .	1	A92-630
B	TRANSCEIVER, may be wall, shelf or rack mounted and occupies two Type B1 relay spaces	1	A92-627
	(The following items are not illustrated)		
*	RELAY, Type B1, 6 ohms, 4FB contacts	1	A62-293
	or		
	RELAY, Type K4, 6 ohms, 4FB contacts		A65-359
	ARRESTER, Equalizer.	1	P3-252
	ARRESTER, Heavy-Duty, with block	2	A3-258
	RESISTOR, bleeder, 50 ohms, 10 watts, with block . .	see page 12	A3-195
	REACTOR, d-c	see page 12	A92-621
	or		
	REACTOR, a-c		A92-636

* For plugboard kit see Section 62.

EXTENDED RANGE SERIES OVERLAY TRACK CIRCUIT

GENERAL INFORMATION

The extended range series overlay track circuit equipment operates at a frequency of 1 kilocycle and has a range of approximately 180 to 330 feet either side of track circuit connection. It is generally used to obtain approach indication for the Wheel Thermo-Scanner Unit. The circuit can also be used to obtain the release of outlying switch locks in applications that require a greater range than can be obtained with the series overlay track circuit previously described.

The unit operates on 9-to 14-volts d-c, battery energy or rectified a-c. Power requirements are shown below:

Input voltage: 9 to 14 volts d-c.

Input current (at 10 volts): Normal 40 ma; shunted 200 ma.

For operation directly from a rectifier without battery a 50-ohm, 10-watt bleeder resistor must be connected across the input of the transceiver, if the rectifier is presented no load other than the transceiver.

When the overlay track circuit is connected to the rails within 150 feet of the regular d-c track circuit battery connection or the transformer end of an a-c track circuit, a reactor must be used to prevent the battery or the transformer from shunting the overlay track circuit. A different reactor is used for each type of track circuit, a-c or d-c. It is connected in one of the track leads of the regular track circuit.

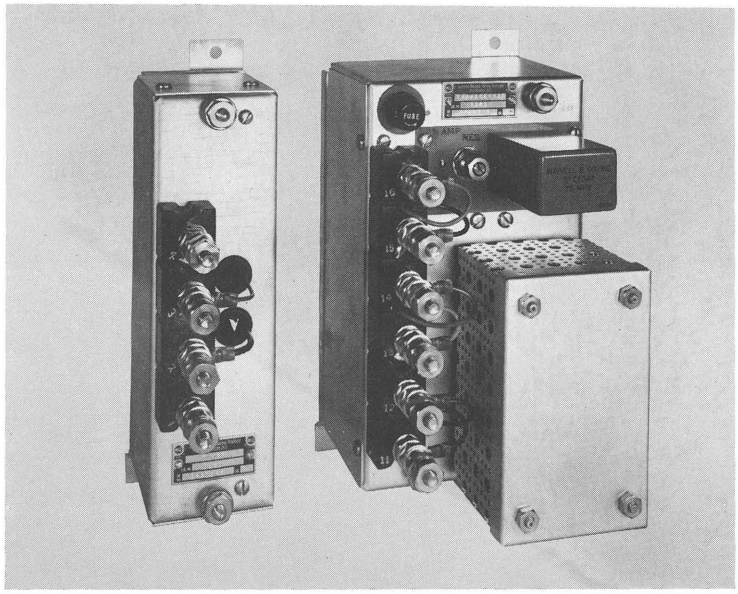

Height - 5-1/2"
Width - 2-1/2"
Depth - 8"

A-Tuner

Height - 6"
Width - 4-3/4"
Depth - 8"

B-Transceiver

EXTENDED RANGE SERIES OVERLAY TRACK CIRCUIT

"Quantity Required" indicates the number needed for one track circuit.

Order by catalog number and name shown in bold type

REF.	NAME	QUANTITY REQUIRED	CATALOG NUMBER
A	TUNER, frequency 1.0 kilocycle. May be wall, shelf, or rack mounted and occupies a Type B1 relay space. .	1	A92-633
B	TRANSCEIVER, may be wall, shelf, or rack mounted and occupies two Type B1 relay spaces	1	A92-624
	(The following items are not illustrated)		
*	RELAY, Type B1, 6 ohms, 4FB contacts		A62-293
	or	1	
	RELAY, Type K4, 6 ohms, 4FB contacts		A65-359
	ARRESTER, Equalizer	1	P3-252
	ARRESTER, Heavy-Duty, with block	2	A3-258
	RESISTOR, bleeder, 50 ohms, 10 watts, with block . .	see page 14	A3-195
	REACTOR, d-c		A92-621
	or	see page 14	
	REACTOR, a-c		A92-636

* For plugboard kit see Section 62.

ISLAND OVERLAY TRACK CIRCUIT
(Shunt)

GENERAL INFORMATION

The island overlay track circuit equipment operates at a frequency of 8 kilocycles and has a range of approximately 300 feet. It is generally used for highway-crossing protection.

The transmitter operates on 9- to 14 volts d-c, battery or rectified a-c. The receiver requires no power supply.

Power requirements are shown below:

Input voltage: 9 to 12 volts d-c. (10 to 14 volts d-c with 5 ohm, 10 watt resistor in series with terminal No. 16 of transmitter. Catalog No. of resistor A3-191. See Catalog Section 3.

Input current (at 10 volts d-c): Normal 230 ma; shunted 800 ma.

When the overlay track circuit is connected to the rails within 300 feet of the regular d-c track circuit battery connection or the transformer end of an a-c track circuit, a reactor must be used to prevent the battery or the transformer from shunting the overlay track circuit. A different reactor is used for each type of track circuit, a-c or d-c. It is connected in one of the track leads of the regular track circuit.

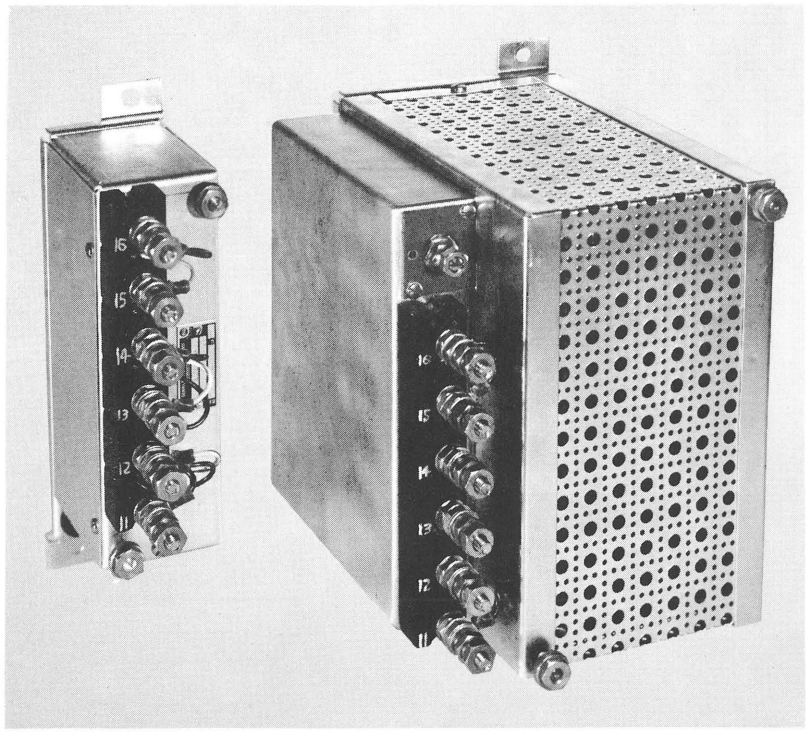

Height - 8-3/4"
Width - 2-1/4"
Depth - 3-1/2"

A-Receiver

Height - 8-3/4"
Width - 6-1/2"
Depth - 9-3/8"

B-Transmitter

ISLAND OVERLAY TRACK CIRCUIT
(Shunt)

"Quantity Required" indicates the number needed for one track circuit.

Order by catalog number and name shown in bold type

REF.	NAME	QUANTITY REQUIRED	CATALOG NUMBER
A	RECEIVER, frequency 8.0 kilocycles. May be wall, shelf, or rack mounted and occupies a Type B1 relay space	1	A92-618
B	TRANSMITTER, May be wall, shelf, or rack mounted and occupies 2-1/2 Type B1 relay spaces	1	A92-615
	(The following items are not illustrated)		
*	RELAY, Type B1, 100 ohms, 4FB contacts	1	A62-317
	or		
	RELAY, Type K4, 100 ohms, 4FB contacts		A65-353
	ARRESTER, Equalizer	2	P3-252
	ARRESTER, Heavy-Duty, with block	4	A3-258
	REACTOR, d-c	see page 16	A92-621
	or		
	REACTOR, a-c		A92-636

*For plugboard kit see Section 62.

APPROACH OVERLAY TRACK CIRCUIT
(Shunt)
GENERAL INFORMATION

The approach overlay track circuit equipment described below and on pages 19-21 (please note that pages 22-23 cover equipment for replacement only) operates at seven, tone modulated carrier frequencies. A typical crossing uses two frequencies. The following frequencies are available:

Carrier Frequency	Modulation Frequency
0.96 kc	28 cps
1.30 kc	38 cps
1.70 kc	50 cps
2.30 kc	68 cps
3.00 kc	88 cps
3.90 kc	110 cps
4.80 kc	140 cps

The approach overlay track circuit is generally used for highway crossing protection. The track circuit equipment controls the highway-crossing lamp and gate circuits as a train approaches and passes the highway crossing. The circuit is adaptable to single-track, double-direction running. Maximum range is approximately 4,000 feet. A track coupling unit is available for bridging the insulated joints of existing track circuits (when used maximum range is reduced to approximately 2500 feet).

The units operate on 10 to 14 volts d-c.

Input current (at 10 volts d-c):

Transmitter - Normal 350 ma; shunted 500 ma.

Receiver - Normal 350 ma; shunted 50 ma.

A reactor must be used to prevent shunting of the overlay track circuit under the following conditions; (1) when regular d-c track circuit battery connections or the connections at the transformer end of an a-c track circuit are within 300 feet of the overlay track circuit connections, or (2) when these regular track circuit connections are located within the overlay track circuit.

A different reactor is used for each type of track circuit, a-c or d-c. It is connected in series with one of the track leads of the regular track circuit.

APPROACH OVERLAY TRACK CIRCUIT (Shunt)

IMPORTANT

The overlay equipment listed below is not generally compatible with equipment previously furnished and shown on pages 21 and 22; therefore, they may not be intermixed or installed on the same crossings or within interfering distance of one another. However, in special cases, certain sets of old and new equipment may be operated in the same area. Detailed information about this limited compatibility may be obtained from the General Railway Signal Company.

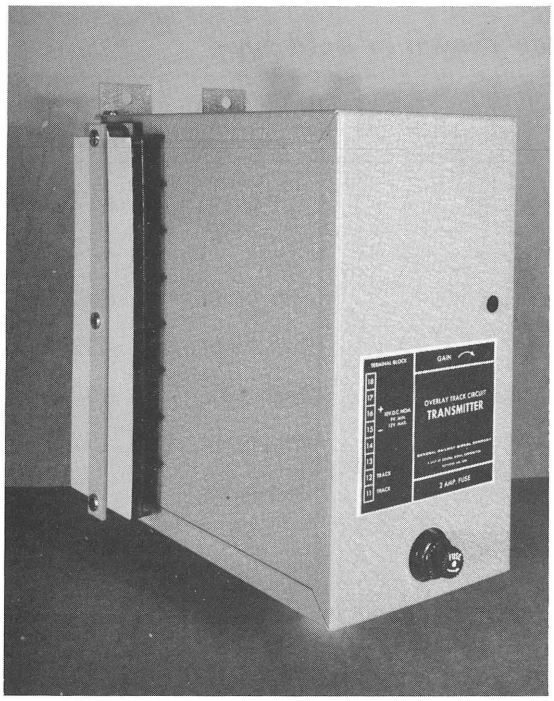

A-Transmitter

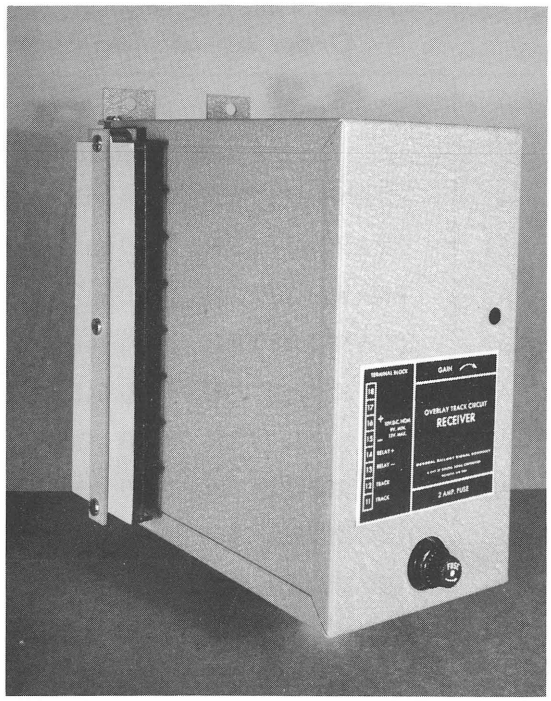

B-Receiver

Each Unit
Height - 9-7/16"
Width - 5"
Depth - 9-3/8"

(Continued on following page)

APPROACH OVERLAY TRACK CIRCUIT (Shunt)

Note: These units may be wall, shelf or rack mounted and occupy 2 Type B1 relay spaces.

"Quantity Required" indicates the number needed for one highway crossing.

Two transmitters and two receivers are required for each highway crossing (each pair, consisting of one transmitter and one receiver, must be of the same frequency).

When other highway crossings exist in the area, additional pairs, Refs. A2 thru A6 and B2 thru B6, (transmitter receiver) from the frequencies listed below are used for the other crossings.

Order by catalog number and name shown in bold type

REF.	NAME	QUANTITY REQUIRED	CATALOG NUMBER
*A	TRANSMITTER, 0.96 kilocycle	1	A92-640
*A1	TRANSMITTER, 1.30 kilocycles	1	A92-641
A2	TRANSMITTER, 1.70 kilocycles	See Note	A92-642
A3	TRANSMITTER, 2.30 kilocycles	See Note	A92-643
A4	TRANSMITTER, 3.00 kilocycles	See Note	A92-644
A5	TRANSMITTER, 3.90 kilocycles	See Note	A92-645
A6	TRANSMITTER, 4.80 kilocycles	See Note	A92-646
*B	RECEIVER, 0.96 kilocycle	1	A92-650
*B1	RECEIVER, 1.30 kilocycles	1	A92-651
B2	RECEIVER, 1.70 kilocycles	See Note	A92-652
B3	RECEIVER, 2.30 kilocycles	See Note	A92-653
B4	RECEIVER, 3.00 kilocycles	See Note	A92-654
B5	RECEIVER, 3.90 kilocycles	See Note	A92-655
B6	RECEIVER, 4.80 kilocycles	See Note	A92-656
	(The following items are not illustrated)		
**	RELAY, Type B1, 100 ohms, 4F-2B contacts		A62-317
	or	2	
	RELAY, Type K4, 100 ohms, 4FB contacts		A65-353
	ARRESTER, Equalizer	4	P3-252
	ARRESTER, Heavy-Duty, with block	As Req'd.	A3-258
	REACTOR, d-c	See Page 18	A92-621
	or		
	REACTOR, a-c		A92-636

* Frequencies normally supplied.

** For plugboard kit see Section 62.

COUPLING UNIT

GENERAL INFORMATION

The coupling unit is used with the approach overlay track circuit equipment to carry the modulated carrier signal around any insulated joints within the limits of the overlay track circuit.

The use of this coupling unit reduces the range of the approach overlay track circuit to approximately 2500 feet. Only one coupling unit required per set of insulated joints, regardless of the number of frequencies being used.

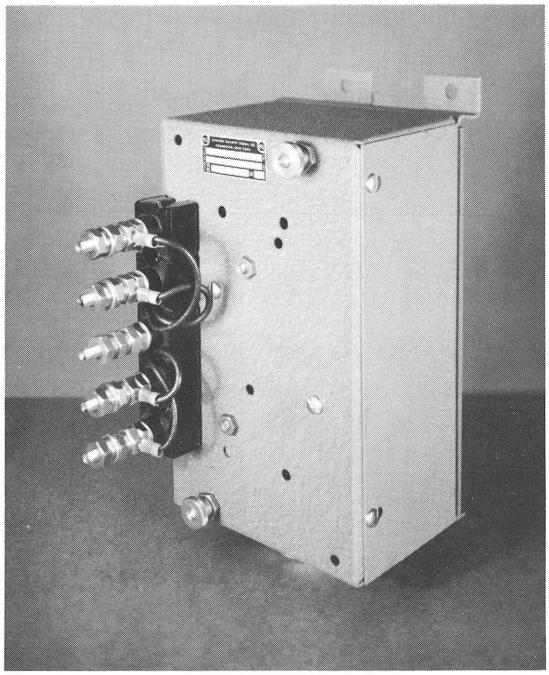

Height - 7"
Width - 5"
Depth - 6-1/16"

A-Coupling Unit

"Quantity Required" indicates the number needed for one track circuit.

Order by catalog number and name shown in bold type

REF.	NAME	QUANTITY REQUIRED	CATALOG NUMBER
A	COUPLING UNIT. May be wall, shelf or rack mounted and occupies two Type B1 relay spaces	1	A92-613
	(The following items are not illustrated)		
	ARRESTER, Equalizer	2 per coupling unit	P3-252
	ARRESTER, Heavy-Duty with block	4 per coupling unit	A3-258

APPROACH OVERLAY TRACK CIRCUIT
(Shunt)
FOR REPLACEMENT ONLY

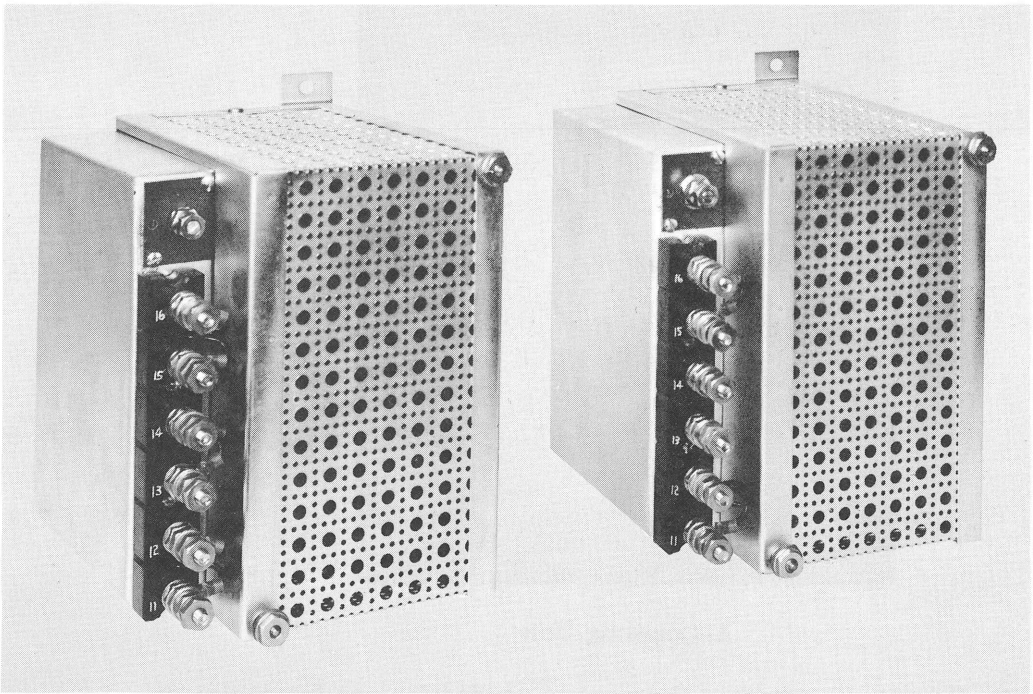

A-Transmitter B-Receiver

Each Unit

Height - 9-7/16"
Width - 6-1/2"
Depth - 9-3/8"

APPROACH OVERLAY TRACK CIRCUIT
(Shunt)
FOR REPLACEMENT ONLY

IMPORTANT

The overlay equipment listed below is not generally compatible with equipment currently furnished as shown on pages 19 and 20; therefore, they may not be intermixed or installed on the same crossings or within interfering distance of one another. However, in special cases, certain sets of old and new equipment may be operated in the same area. Detailed information about this limited compatibility may be obtained from the General Railway Signal Company.

"Quantity Required" indicates the number needed for one track circuit.

Order by catalog number and name shown in bold type

REF.	NAME	QUANTITY REQUIRED	CATALOG NUMBER
A	TRANSMITTER, 1.0 kilocycle. May be wall, shelf, or rack mounted and occupies 2-1/2 Type B1 relay spaces.	1	A92-606
A1	TRANSMITTER, 1.7 kilocycles. May be wall, shelf, or rack mounted and occupies 2-1/2 Type B1 relay spaces.	1	A92-609
A2	TRANSMITTER, 3.2 kilocycles. May be wall, shelf, or rack mounted and occupies 2-1/2 Type B1 relay speces.	1	A92-610
A3	TRANSMITTER, 4.8 kilocycles. May be wall, shelf, or rack mounted and occupies 2-1/2 Type 1 relay spaces. .	1	A92-611
B	RECEIVER, 1.0 kilocycle. May be wall, shelf, or rack mounted and occupies 2-1/2 Type B1 relay spaces . . .	1	A92-600
B1	RECEIVER, 1.7 kilocycles. May be wall, shelf, or rack mounted and occupies 2-1/2 Type B1 relay spaces .	1	A92-603
B2	RECEIVER, 3.2 kilocycles. May be wall, shelf, or rack mounted and occupies 2-1/2 Type B1 relay spaces . . .	1	A92-604
B3	RECEIVER, 4.8 kilocycles. May be wall, shelf, or rack mounted and occupies 2-1/2 Type B1 relay spaces . . .	1	A92-605
	COUPLING UNIT, see page 21.		
	(The following item is not illustrated)		
	TERMINAL BOX	1	A92-639

Memoranda

TYPE K 1/2 TRANSFORMERS

Will not fit in light-signal units

Frequency - 60 cycles (will operate satisfactorily on frequencies from 50 to 100 cycles).

When ordering specify K 1/2 Transformer and give catalog number

PRIMARY VOLTS	SECONDARY		TOTAL KV-A.	VOLTAGE DIAGRAM (See Page 7)	CATALOG NUMBER
	VOLTS	AMPERES			
115(100-15)	15[3(1-2)-12(4-8)]	6.7	.100	Fig. 1	A95-10
"	11(10-1) 15[3(1-2)-12(4-8)]	0.9 4.0	.070	Fig. 2	A95-11
* 115(5-100-10)	18(1-1-10-3-3)	5.0	.090	Fig. 12	A95-15
230(200-30)	15[3(1-2)-12(4-8)]	6.0	.090	Fig. 3	A95-19
"	11(10-1) 15[3(1-2)-12(4-8)]	0.9 4.0	.070	Fig. 4	A95-20
* 230(10-200-20)	18(1-1-10-3-3)	5.0	.090	Fig. 13	A95-21
110(6-92-12)	14(2-2-9-1)	1.8	.025	Fig. 11	A95-30

* DESIGNED FOR USE WITH TYPE S RECTIFIERS.

TYPE K 1/2 TRANSFORMERS

For mounting in light-signal units

Frequency - 60 cycles (will operate satisfactorily on frequencies from 50 to 100 cycles).

When ordering specify K 1/2 Transformer and give catalog number

PRIMARY VOLTS	SECONDARY		TOTAL KV-A.	VOLTAGE DIAGRAM (See Page 7)	CATALOG NUMBER
	VOLTS	AMPERES			
110(3-101-6)	14(1-1-6-3-3)	3.22	.045	Fig. 5	A95-100
"	12(1-1-4-3-3)	3.75	.045	Fig. 6	A95-101
110(5-95-10)	15(1-1-7-3-3)	6.0	.090	Fig. 7	A95-102
115(5-100-10)	12(1-1-4-3-3)	4.17	.050	Fig. 8	A95-103
220(11-187-22)	12(1-1-4-3-3)	3.75	.045	Fig. 9	A95-110
220(6-202-12)	14(1-1-6-3-3)	3.22	.045	Fig. 10	A95-120

Memoranda

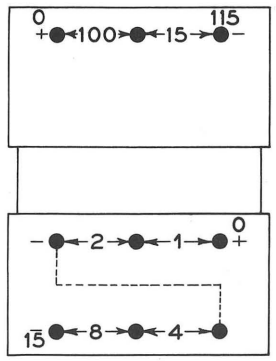

1

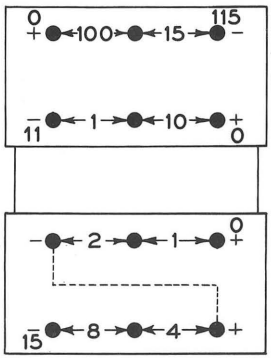

2

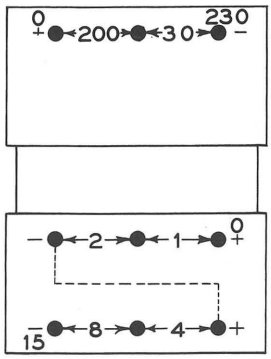

3

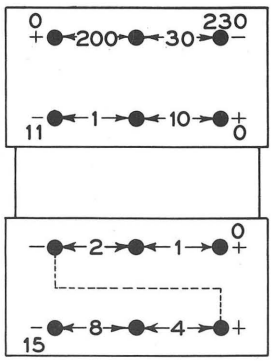

4

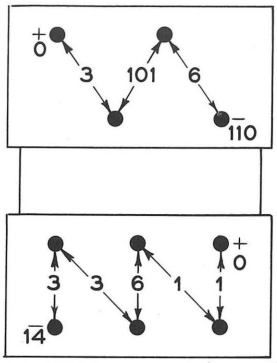

5

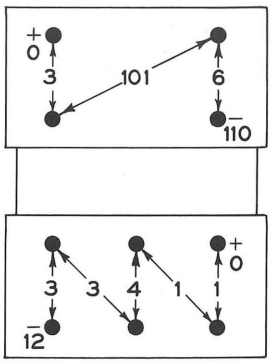

6

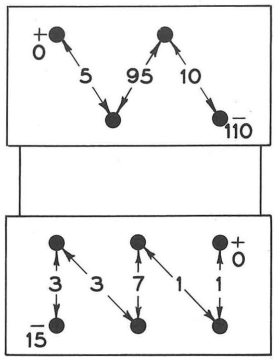

7

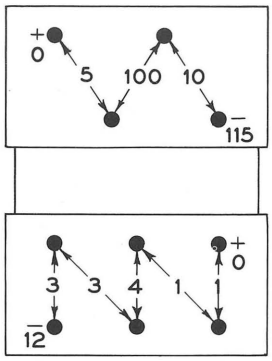

8

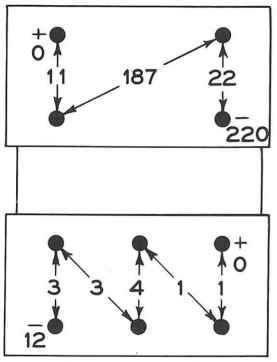

9

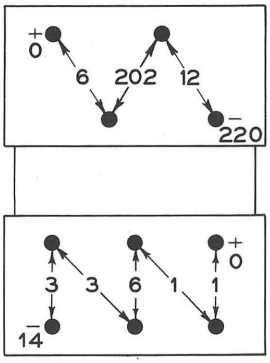

10

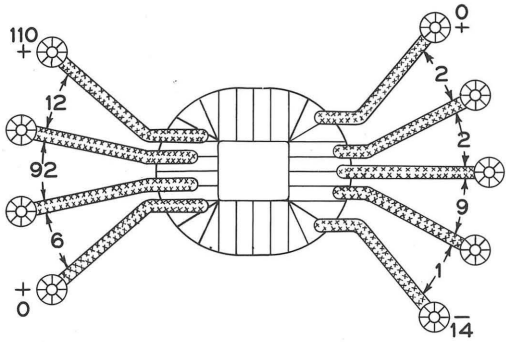

11

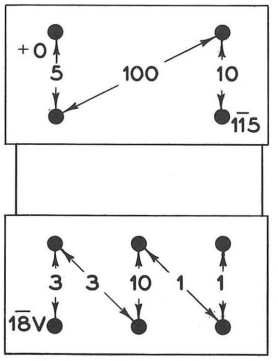

12

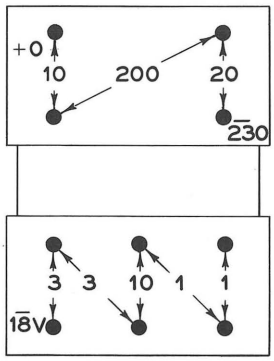

13

Voltage diagrams for Type K½ Transformers

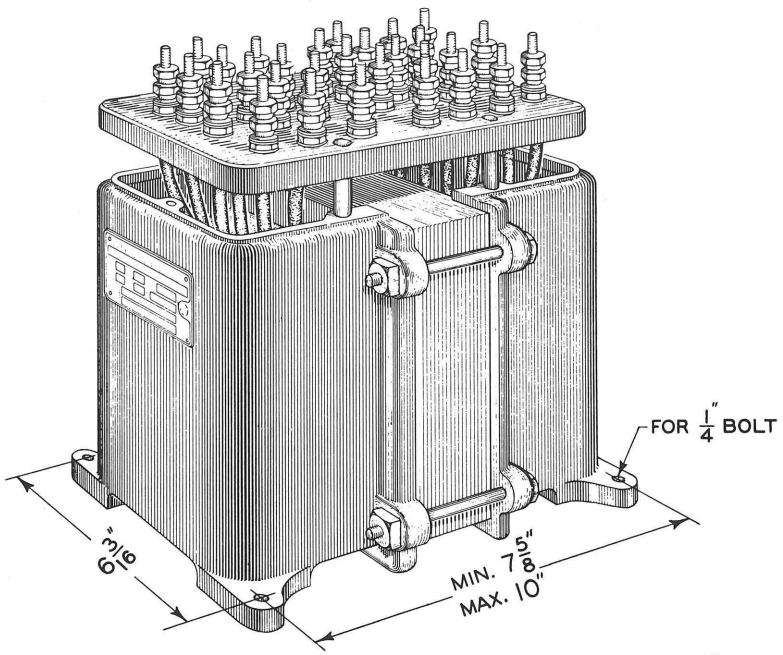

LENGTH—MIN. 8⅜"-MAX. 10¾"
HEIGHT—8 7/16"
WIDTH—6 15/16"

GENERAL DESCRIPTION

The Type K2 Transformers are made in capacities up to 1.0 kv-a., 60 to 100 cycles.

Type K2 Transformers

TYPE K1 TRANSFORMERS
for Pole Mounting

Frequency - 60 cycles (will operate satisfactorily on frequencies up to 100 cycles).

When ordering specify K1 Pole Mounted Transformer and give catalog number

PRIMARY VOLTS	SECONDARY		TOTAL KV-A.	VOLTAGE DIAGRAM (See Page 15)	CATALOG NUMBER
	VOLTS	AMPERES			
230(11-196-23)	115	1.31	.150	Fig. 1	A95-300
"	"	2.61	.300	"	A95-305
460(23-391-46)	"	1.31	.150	Fig. 2	A95-310
"	"	2.61	.300	"	A95-315
575(28-490-57)	"	1.31	.150	Fig. 3	A95-320
"	"	2.61	.300	"	A95-325

TYPE K2 TRANSFORMERS
for Pole Mounting

Frequency - 60 cycles (will operate satisfactorily on frequencies up to 100 cycles).

When ordering specify K2 Pole Mounted Transformer and give catalog number

PRIMARY VOLTS	SECONDARY		TOTAL KV-A.	VOLTAGE DIAGRAM (See Page 15)	CATALOG NUMBER
	VOLTS	AMPERES			
110	140(10-110-20)	4.55	.50	Fig. 7A	A95-340
"	"	9.1	1.0	"	A95-345
115(5-100-10)	115	6.52	.750	Fig. 4	A95-350
"	"	13.05	1.5	"	A95-351
"	"	21.7	2.5	"	A95-352
"	230	3.26	.750	Fig. 5	A95-360
"	"	6.52	1.5	"	A95-361
"	"	10.85	2.5	"	A95-362
"	460	1.63	.750	Fig. 6	A95-365
"	"	3.26	1.5	"	A95-366
"	"	5.45	2.5	"	A95-367
"	575	1.3	.750	Fig. 7	A95-370
"	"	2.61	1.5	"	A95-371
"	"	4.35	2.5	"	A95-372
230(11-196-23)	115	6.52	.750	Fig. 1	A95-375
"	"	13.05	1.5	"	A95-376
"	"	21.7	2.5	"	A95-377
460(23-391-46)	"	6.52	.750	Fig. 2	A95-380
"	"	13.05	1.5	"	A95-381
"	"	21.7	2.5	"	A95-382
575(28-490-57)	"	6.52	.750	Fig. 3	A95-385
"	"	13.05	1.5	"	A95-386
"	"	21.7	2.5	"	A95-387

Memoranda

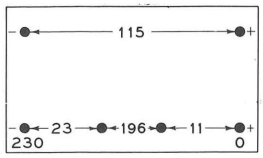

1

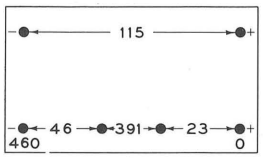

2

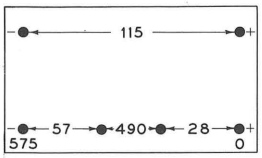

3

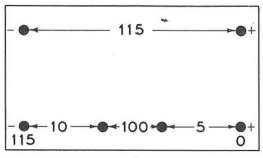

4

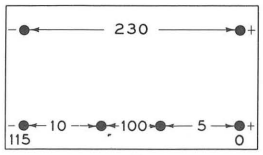

5

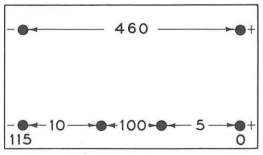

6

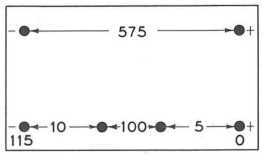

7

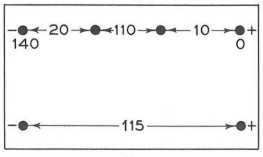

7A

VOLTAGE DIAGRAMS FOR POLE MOUNTED TRANSFORMERS

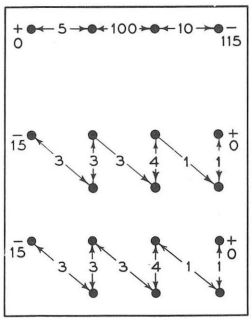

8

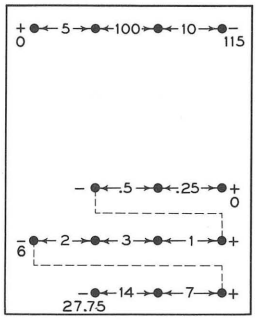

9

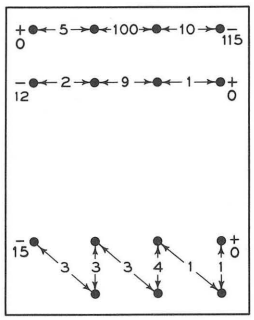

10

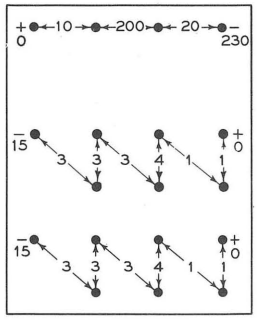

11

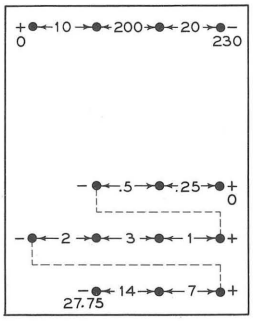

12

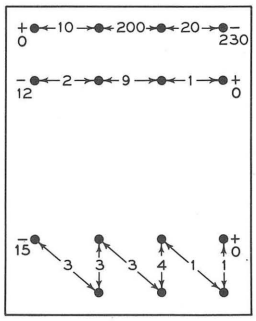

13

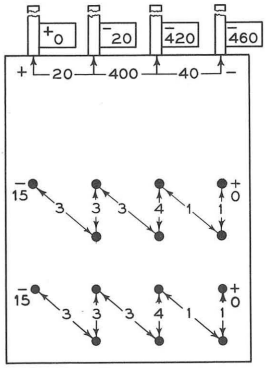

14

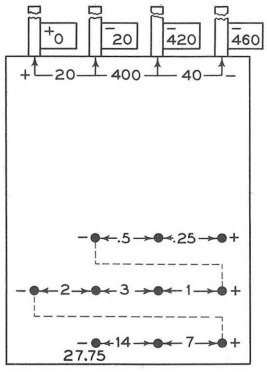

15

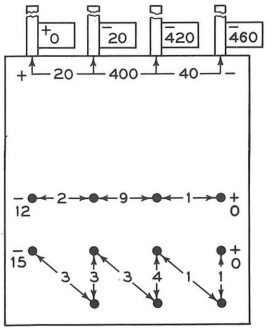

16

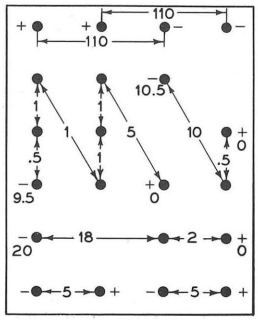

17

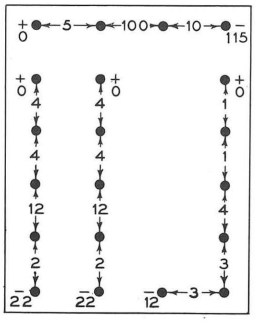

18

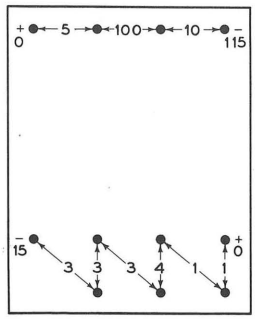

19

VOLTAGE DIAGRAMS FOR UI TRANSFORMERS

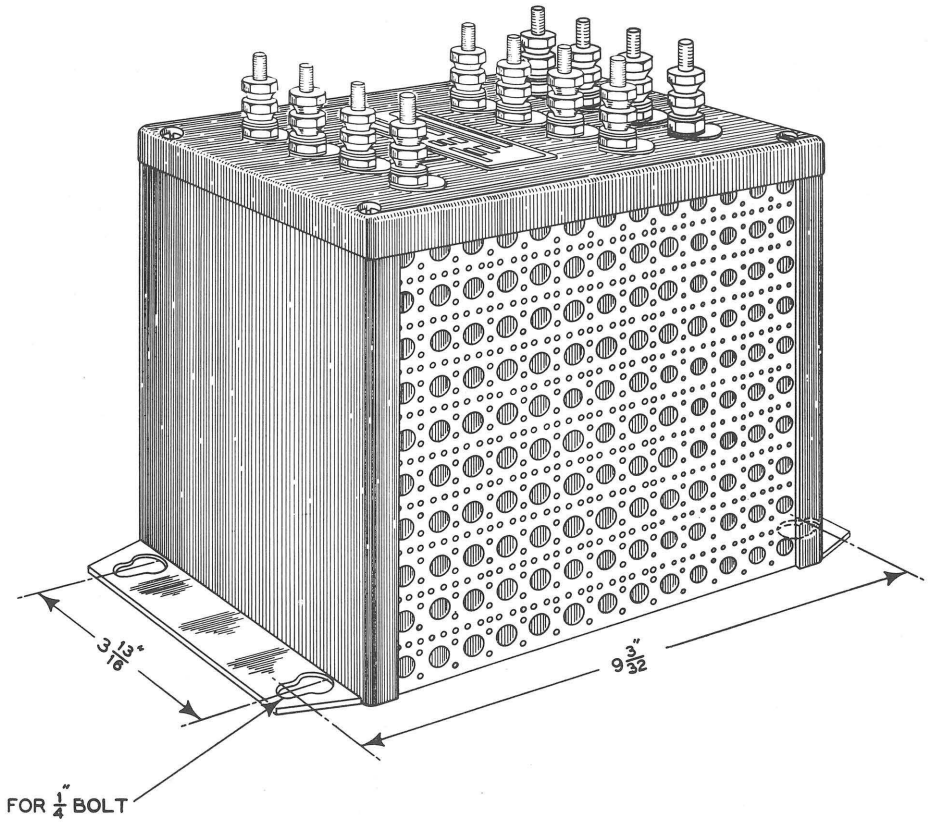

LENGTH—9 13/16"
HEIGHT—8 1/8"
WIDTH—5 3/8"

GENERAL DESCRIPTION

The Type U1 Transformers are made in capacities up to 0.310 kv-a., 60 to 100 cycles.

Type U1 Transformer

TYPE U1 TRANSFORMERS

Frequency - 60 cycles (will operate satisfactorily on frequencies up to 100 cycles).

When ordering specify U1 Transformer and give catalog number

PRIMARY VOLTS	SECONDARY			TOTAL KV-A.	VOLTAGE DIAGRAM (See Page 15)	CATALOG NUMBER
	NO. OF WINDINGS	VOLTS	AMPERES			
115(5-100-10)	2	15(1-1-4-3-3-3)	8.3	.250	Fig. 8	A95-400
"	2	22(4-4-12-2)	3.4			
	1	12(1-1-4-3-3)	12.5	.300	Fig. 18	A95-403
"	1	27.75[21(7-14) -6(1-3-2) -.75(.25-.5)]	10.8	.300	Fig. 9	A95-405
"	1	15(1-1-4-3-3-3)	20.0	.300	Fig. 19	A95-407
"	1	12(1-9-2)	0.83	.310	Fig. 10	A95-410
	1	15(1-1-4-3-3-3)	20.0			
220 or 110	2	5	2.0	.220	Fig. 17	A95-412
	1	20(2-18)	2.0			
	1	20[10.5(.5-10) -9.5(5-1-1-1-1.5)]	8.0			
230(10-200-20)	2	15(1-1-4-3-3-3)	8.3	.250	Fig. 11	A95-415
"	1	27.75[.75(.25-.5) -6(1-3-2) -21(7-14)]	10.8	.300	Fig. 12	A95-420
"	1	12(1-9-2)	0.83	.310	Fig. 13	A95-425
	1	15(1-1-4-3-3-3)	20.0			
460(20-400-40)	2	15(1-1-4-3-3-3)	7.3	.220	Fig. 14	A95-430
"	1	27.75[.75(.25-.5) -6(1-3-2) -21(7-14)]	9.0	.250	Fig. 15	A95-435
"	1	12(1-9-2)	0.83	.260	Fig. 16	A95-440
	1	15(1-1-4-3-3-3)	16.7			

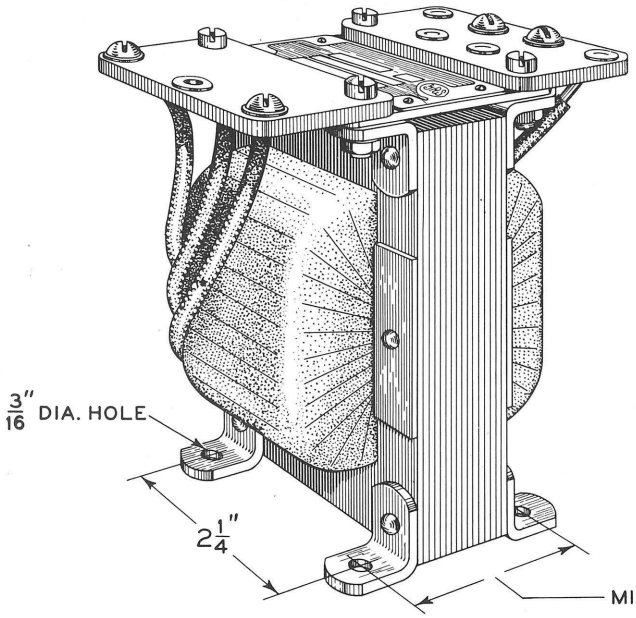

Type S1

LENGTH—MIN. 4 1/16" - MAX. 4 13/16"
HEIGHT—4 3/16"
WIDTH—2 3/4"

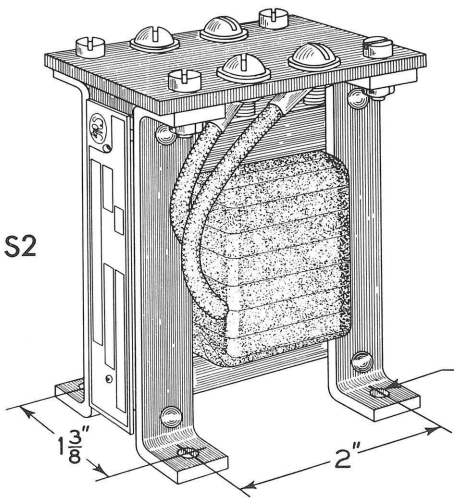

Type S2

LENGTH—2 3/4"
HEIGHT—3 1/8"
WIDTH—1 3/4"

GENERAL DESCRIPTION

The Type S1 Transformers are made in capacities up to 0.060 kv-a., 60 cycle, with one secondary.

Type S2 Transformer

The Type S2 Transformers are made in 0.005 kv-a., capacity, 60 cycle, with one secondary, untapped.

Types S1 and S2 Transformers

TYPE S1 TRANSFORMERS

Frequency - 60 cycles (will operate satisfactorily on frequencies up to 100 cycles).

When ordering specify S1 Transformer and give catalog number

PRIMARY VOLTS	SECONDARY		TOTAL KV-A.	VOLTAGE DIAGRAM (See Below)	CATALOG NUMBER
	VOLTS	AMPERES			
115(5-100-10)	12.5(.5-9-1-1-1)	1.6	.020	Fig. 1	A95-500
"	"	4.8	.060	"	A95-510

TYPE S2 TRANSFORMERS

Frequency - 60 cycles (will operate satisfactorily on frequencies up to 100 cycles).

When ordering specify S2 Transformer and give catalog number

PRIMARY VOLTS	SECONDARY		TOTAL KV-A.	VOLTAGE DIAGRAM (See Below)	CATALOG NUMBER
	VOLTS	AMPERES			
110	20	.250	.005	Fig. 2	A95-550
"	10	.500	"	Fig. 3	A95-560

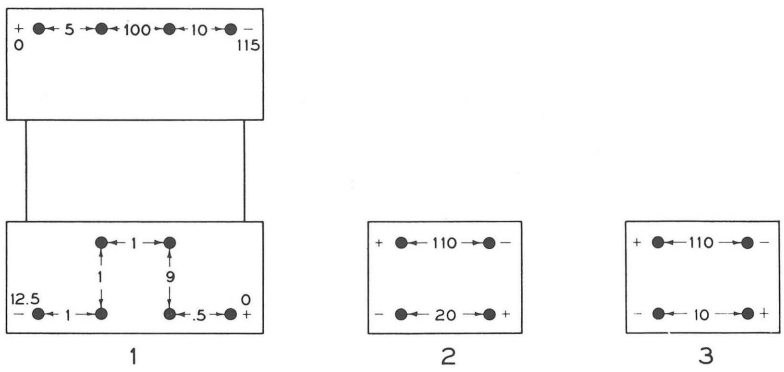

Voltage diagrams for Types S1 and S2 Transformers

Memoranda

CATALOG SECTION 97

Transformers
Oil-Cooled

CONTENTS

	Page
Type L1 Transformers	4
Type L2 Transformers	5
Type L3 Transformers	6
Type L4 Transformers	7
Type L5 Transformers	8
Type L6 Transformers	9
General Description	3
Hanger Irons, Oil, Etc.	10

GENERAL RAILWAY SIGNAL COMPANY

ROCHESTER, NEW YORK

Printed in U. S. A.

NOVEMBER 1959

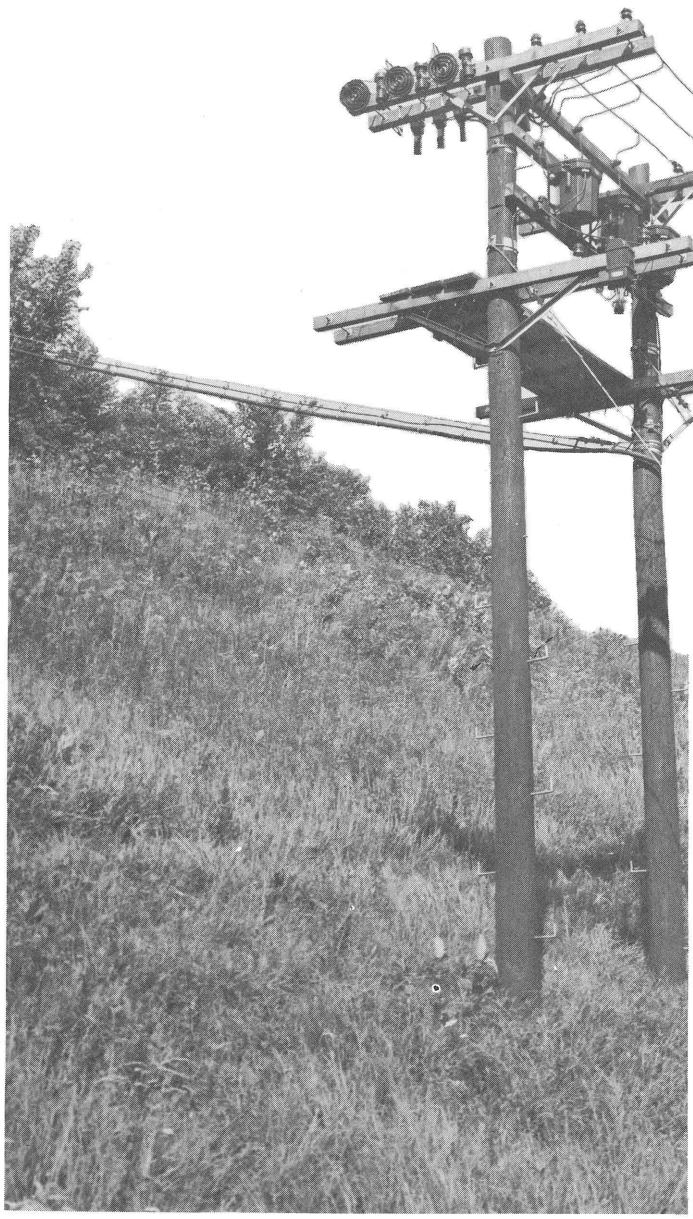

Typical installation.

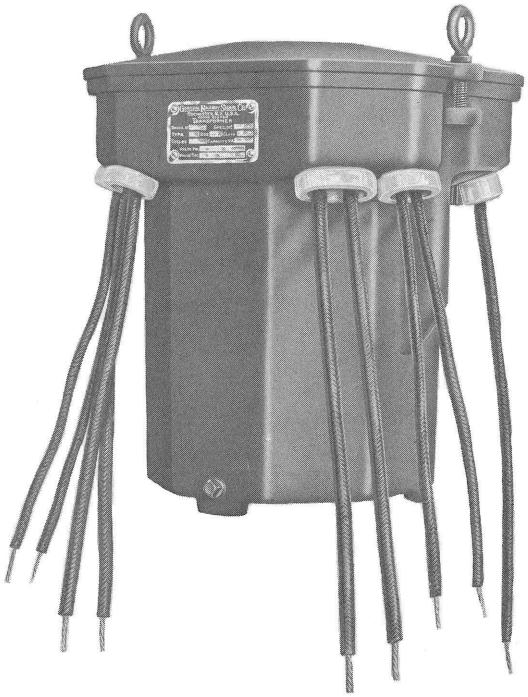

Type L Transformer.

Type L Transformers

GENERAL DESCRIPTION

Type L Transformers are pole type, single phase, oil cooled. They are regularly furnished for 50 to 100 cycle service. The capacities vary with the voltage of the windings, which determines the degree of insulation required. They range from 0.6 KV-A. for voltages up to 550 in the L-1 size to 20 KV-A. at 4400 volts in the L-6 size. See tabulations on following pages for intermediate ratings.

The transformer windings are contained in a cast-iron weather-proof case, which is fitted with suitable lugs for hanging. Each transformer is equipped with 5 and 10 percent reduced voltage taps on the high-voltage winding. The high tension leads and taps are brought to a porcelain terminal block which is located below the oil level to minimize the liability of lightning arcing from post to post. The low-voltage leads and taps are brought to a separate porcelain terminal block located above the oil level.

The high-voltage leads are bared and sweated solid inside the case, thus preventing the siphoning of oil through the insulation and cable strands. All leads are imbedded in an insulating cement where they pass through the insulating bushings.

All Type L Transformer cases are equipped with AAR binding post for ground wire connection.

Core losses and copper losses are lower and the efficiency is higher than usually obtainable on this special class of transformers. Good regulation on low power factor, and low exciting current are features which combine to form an exceptional transformer.

Transformers are insulated to meet 60 cycle dielectric tests as described by A.A.R. for "Oil immersed, self-cooled transformers".

Explanation of Voltage Characteristics

Several different ways of showing the voltages of a transformer are used as follows:

115(5-100-10)

When a winding is marked this way it means that the full winding gives 115 volts and that it has taps at 5, 100, and 10 volts. The current rating for this winding is the current which can be delivered at 115 volts.

220/110

When a winding is marked this way it means that there are two 110 volt sections that may be connected to energize one secondary circuit at 220 volts (in series) or at 110 volts (in multiple). The current ratings for a winding such as this are also given in the same manner, i.e. 2.7/5.4

It is extremely important that the oil used for filling transformers be absolutely free from moisture, therefore, we have made available a high grade transformer oil which is furnished in one-gallon and 5-gallons sealed containers. We recommend that oil be ordered in such quantities as to make unnecessary its storage in unsealed containers - see page 10.

TYPE L1 TRANSFORMERS

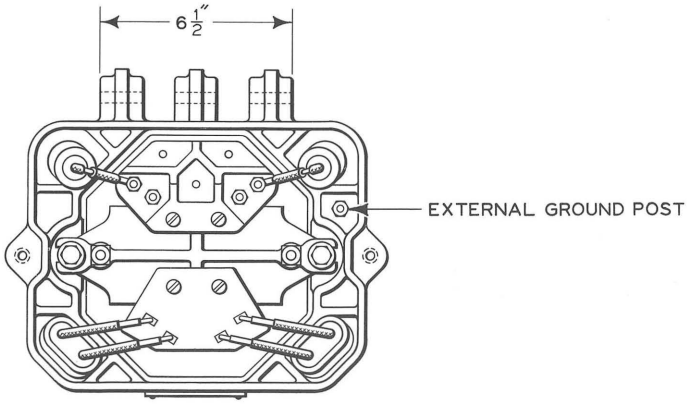

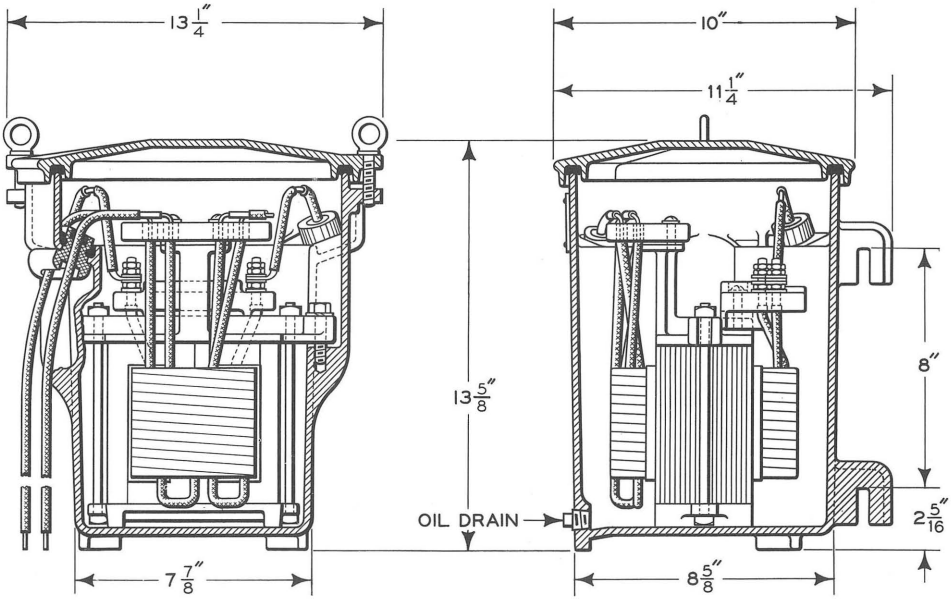

Type L1 Transformers are made in capacities up to 550 volts, 0.60 kv-a., at 50 to 100 cycles.

Transformers include oil and hanger irons.

Weight with oil approximately 100 lbs.

To order, specify L1 Transformer and give catalog number

PRIMARY VOLTS	SECONDARY			TOTAL KV-A.	CATALOG NUMBER
	INDEPENDENT WINDINGS	VOLTS	AMPERES		
220	1	220/110	2.7/5.4	0.60	A97-100
440	1	"	"	"	A97-105
550	1	"	"	"	A97-110

TYPE L2 TRANSFORMERS

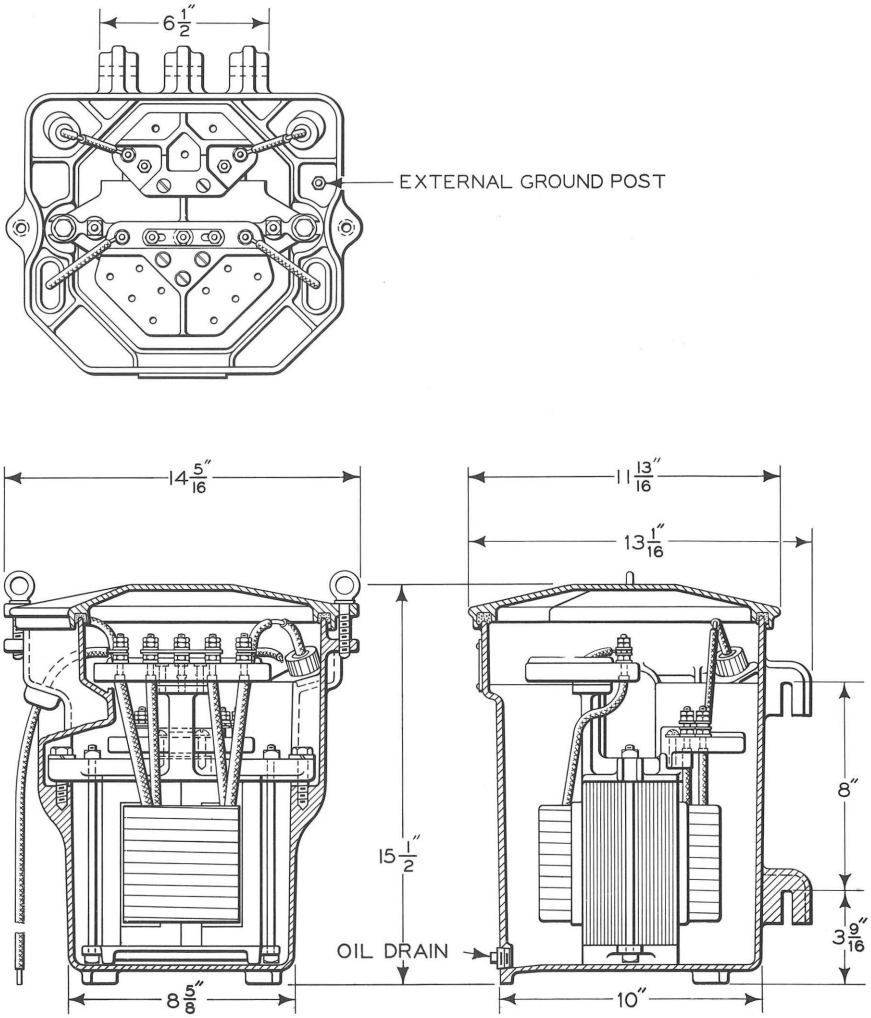

Type L2 Transformers are made in capacities up to 4400 volts, 0.60 kv-a., at 50 to 100 cycles.

Transformers include oil and hanger irons.

Weight with oil approximately 150 lbs.

To order, specify L2 Transformer and give catalog number

PRIMARY VOLTS	SECONDARY			TOTAL KV-A.	CATALOG NUMBER
	INDEPENDENT WINDINGS	VOLTS	AMPERES		
220	1	220/110	6.8/13.6	1.5	A97-120
440	1	"	"	"	A97-125
550	1	"	"	"	A97-130
2200	1	"	4.5/9.0	1.0	A97-135
4400	1	"	2.7/5.4	0.6	A97-140

TYPE L3 TRANSFORMERS

PLATE P0207

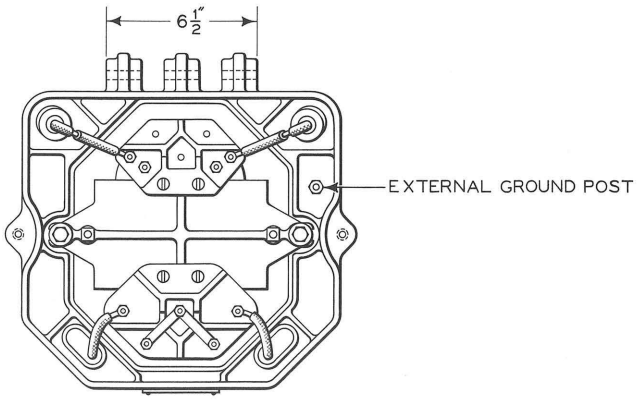

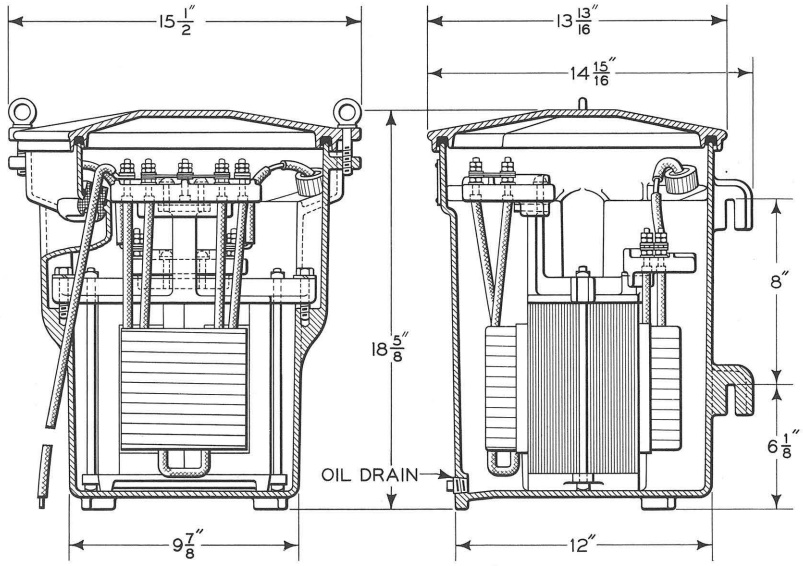

Type L3 Transformers are made in capacities up to 4400 volts, 1.0 kv-a., at 50 to 100 cycles.

Transformers include oil and hanger irons.

Weight with oil approximately 200 lbs.

To order, specify L3 Transformer and give catalog number

PRIMARY VOLTS	SECONDARY			TOTAL KV-A.	CATALOG NUMBER
	INDEPENDENT WINDINGS	VOLTS	AMPERES		
220	1	220/110	13.6/27.2	3.0	A97-150
440	"	"	"	"	A97-155
550	"	"	"	"	A97-160
2200	"	"	6.8/13.6	1.5	A97-165
4400	"	"	4.5/9.0	1.0	A97-170

TYPE L4 TRANSFORMERS

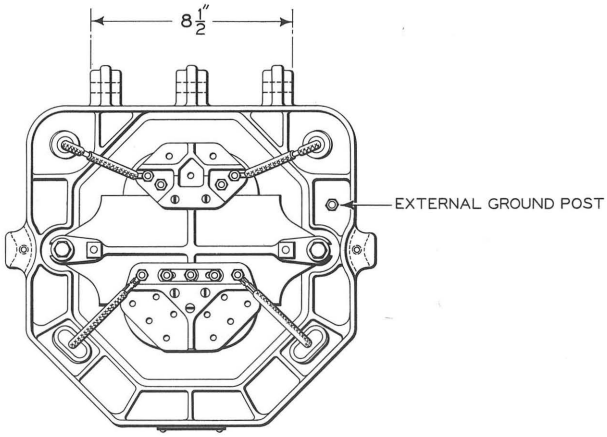

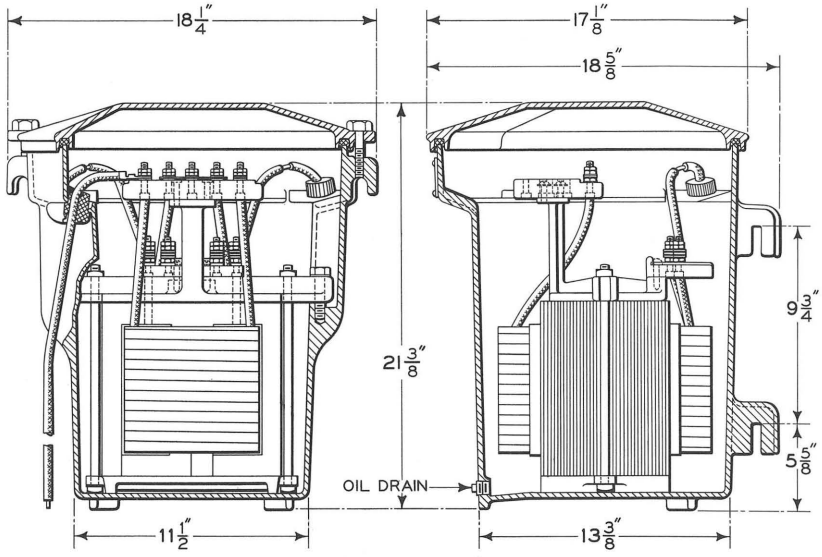

Type L4 Transformers are made in capacities up to 4400 volts, 3.5 kv-a., at 50 to 100 cycles.

Transformers include oil and hanger irons.

Weight with oil approximately 310 lbs.

To order, specify L4 Transformer and give catalog number

PRIMARY VOLTS	SECONDARY			TOTAL KV-A.	CATALOG NUMBER
	INDEPENDENT WINDINGS	VOLTS	AMPERES		
120	2	115(5-100-10)	* 21.7	5.0	A97-180
220	1	220/110	22.7/45.4	"	A97-185
440	1	"	"	"	A97-190
550	1	"	"	"	A97-195
2200	1	"	"	"	A97-200
4400	1	"	16.0/32.0	3.5	A97-205

* = Each winding.

TYPE L5 TRANSFORMERS

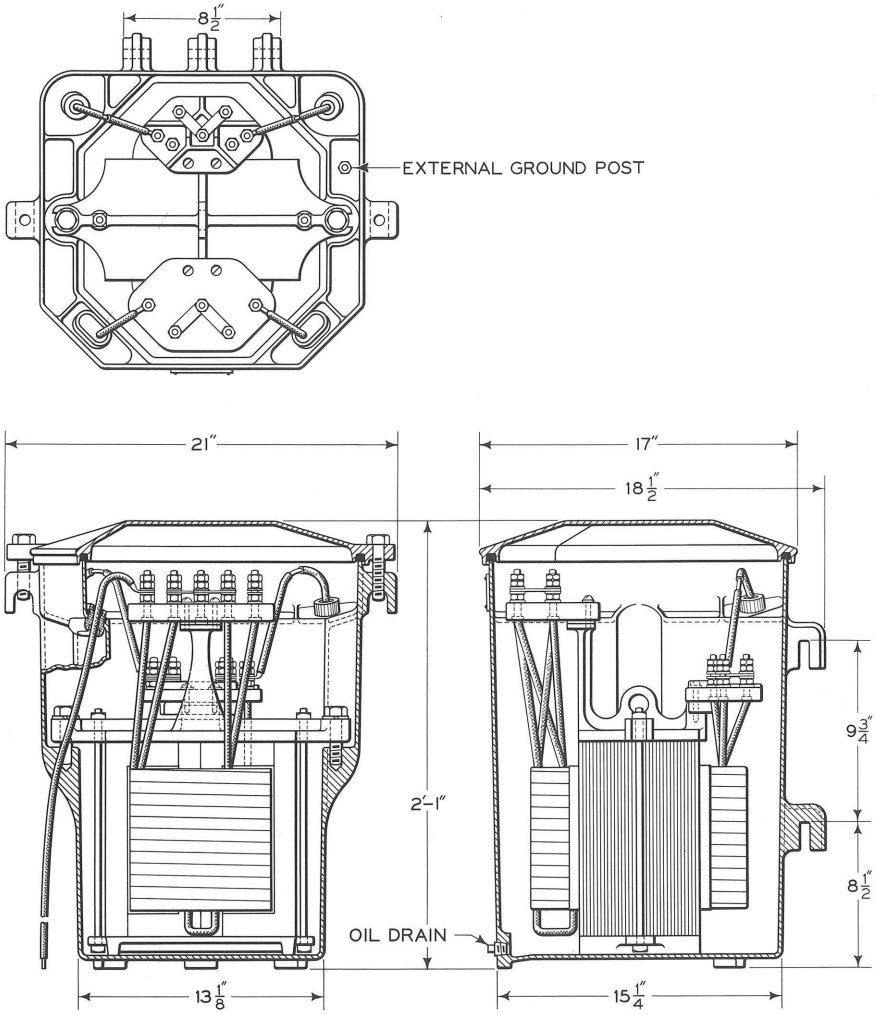

Type L5 Transformers are made in capacities up to 4400 volts, 5.0 kv-a., at 50 to 100 cycles.

Transformers include oil and hanger irons.

Weight with oil approximately 425 lbs.

To order, specify L5 Transformer and give catalog number

PRIMARY VOLTS	SECONDARY			TOTAL KV-A.	CATALOG NUMBER
	INDEPENDENT WINDINGS	VOLTS	AMPERES		
120	2	115(5-100-10)	* 43.5	10.0	A97-210
220	1	220/110	45.5/91.0	"	A97-215
440	"	"	"	"	A97-220
550	"	"	"	"	A97-225
2200	"	"	"	"	A97-230
4400	"	"	22.7/45.4	5.0	A97-235

* = Each winding.

TYPE L6 TRANSFORMERS

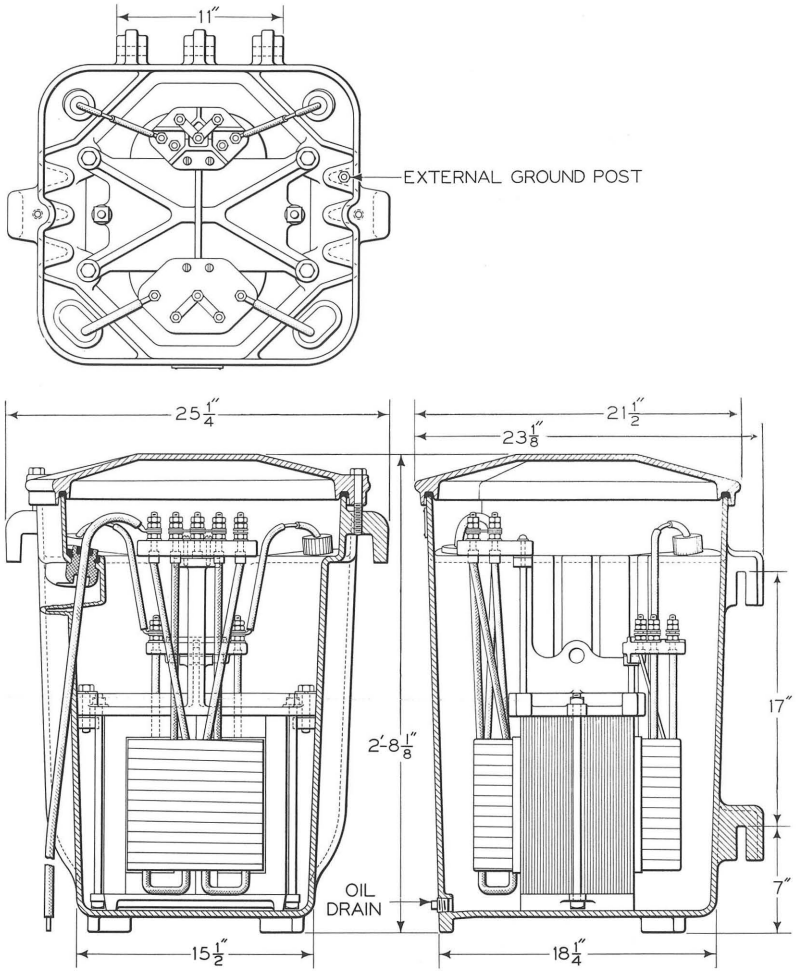

Type L6 Transformers are made in capacities up to 4400 volts, 20.0 kv-a., at 50 to 100 cycles.

Transformers include oil and hanger irons.

Weight with oil approximately 850 lbs.

To order, specify L6 Transformer and give catalog number

PRIMARY VOLTS	SECONDARY			TOTAL KV-A.	CATALOG NUMBER
	INDEPENDENT WINDINGS	VOLTS	AMPERES		
120	2	115(5-100-10)	* 108.5	25.0	A97-240
220	1	220/110	113.5/227.0	"	A97-245
440	"	"	"	"	A97-250
550	"	"	"	"	A97-255
2200	"	"	91.0/182.0	20.0	A97-260
4400	"	"	45.5/91.0	10.0	A97-265
4400	"	"	91.0/182.0	20.0	A97-270

* = Each winding.

HANGER IRONS, OIL, ETC. FOR TYPE L TRANSFORMERS

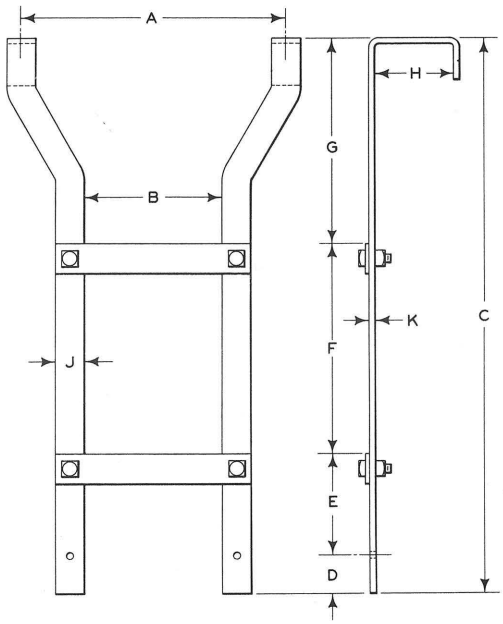

1-2-3

FIG. NO.	A	B	C	D	E	F	G	H	J	K	WEIGHT IN LBS.
1	13 1/2"	7"	28"	2"	7 5/8"	8 1/8"	10 1/4"	4"	1 1/2"	1/4"	10
2	13 1/2	9	33 1/2	1	12 9/16	9 15/16	10	4	1 1/2	3/8	17
3	23	11 3/4	43	2	12 7/8	17 1/4	10 7/8	4	2 1/4	1/2	42

PRINCIPLE DIMENSIONS OF HANGER IRONS

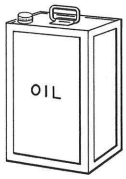

4

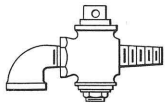

5

Order by catalog number and name shown in bold type

REF.	NAME	CATALOG NUMBER
1	HANGER IRON, for Types L1, L2 and L3 Transformers, drilled for 3/8" lag screws	P97-103
2	HANGER IRON, for Types L4 and L5 Transformers, drilled for 1/2" lag screws	P97-106
3	HANGER IRON, for Type L6 Transformer, drilled for 5/8" lag screws	P97-109
4	TRANSFORMER OIL, 5 gal. sealed can	P97-111
4a	TRANSFORMER OIL, 1 gal. sealed can . . . . . Note - Type L1 requires 6 qts. oil " L2 " 8 qts. oil " L3 " 12 qts. oil " L4 " 20 qts. oil " L5 " 28 qts. oil " L6 " 60 qts. oil	P97-113
5	DRAIN COCK, 3/4", for Type L6 Transformer	P97-115
5a	Same as Ref. 5, except 1/2", for Type L5 Transformer	P97-116
5b	Same as Ref. 5, except 3/8", for Types L4, L3, L2 and L1 Transformers	P97-117

Instructions
for Inserting the Attached Material
in your
GRS ASSEMBLIES Catalog

1. CONTENTS PAGE: Discard blue sheet, dated 1-63 and insert yellow sheet dated 3-63.

2. SECTION 53: Insert this new section, pages 21-30, following page 6 of present section 53.

3. SECTION 73: Discard present section, pages 71-76 and replace by new section, pages 71-76, dated March 1963.

4. SECTION 91: Discard pages 1-2, 15-16, 17-18, 19-20 and 21-22 and insert new pages 1-2, 15-16, 17-18, 19-20, 21-22 and 23-24, dated March 1963.

5. SECTION 95: Discard pages 5-6 and 7-8 and insert new pages 5-6 and 7-8, dated March 1963.

CORRECTIONS

SECTION 85 - page 44 -
Change Catalog No. of Ref. 4 from P85-721 to P85-932
" " " " " 7 " P85-725 to P85-933
" " " " " 8 " P85-729 to P85-934

OLD GRS CATALOG

Volume 5, Section J

1. Discard Section J, Part 2 as the Model 4 Switch Machine and parts have been discontinued.

General Railway Signal Company
Rochester 2, New York

A-1444
March 1963